Dec. 4, 1934. K. WILHELM 1,982,717

LOW CAPACITY SWITCHING MEANS

Filed April 25, 1931

Fig. 1

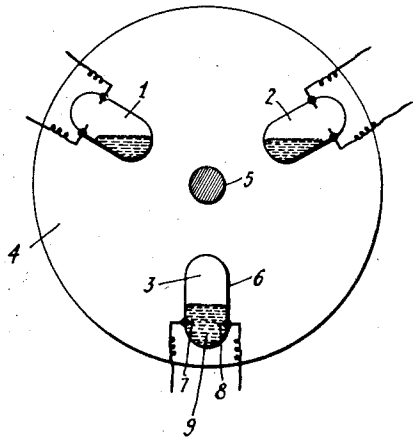

Fig. 2

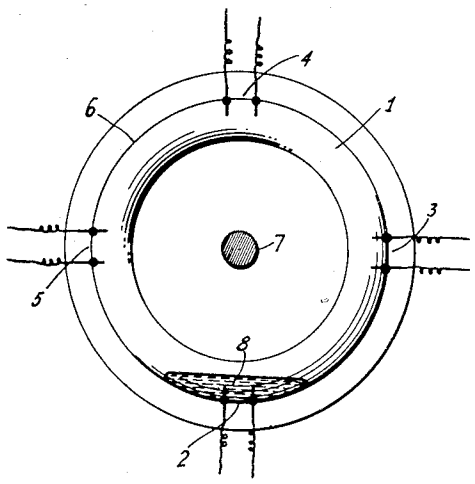

Fig. 3

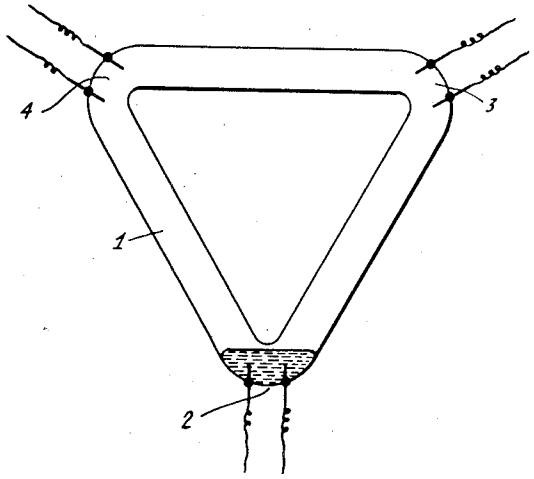

INVENTOR
KARL WILHELM
BY H. G. Grover
ATTORNEY

Patented Dec. 4, 1934

1,982,717

UNITED STATES PATENT OFFICE

1,982,717

LOW CAPACITY SWITCHING MEANS

Karl Wilhelm, Berlin-Charlottenburg, Germany, assignor to Siemens & Halske, Aktiengesellschaft, Siemensstadt, near Berlin, Germany, a corporation of Germany

Application April 25, 1931, Serial No. 532,785
In Germany July 16, 1930

1 Claim. (Cl. 250—16)

This invention relates to a low capacity switching arrangement primarily for use in high frequency current work.

More specifically the invention relates to a low capacity coil switch for use in broadcast receivers.

For changing coils in broadcast receivers, recourse is usually had to change-over switches which usually consist of a plurality of contacts. In the course of operations, however, defects frequently arise at these contacts with the result that harmful disturbances occur in the apparatus during reception. The switch devices mostly employed for changing coils are complicated, and, therefore, it is usual for the location of the faulty contact to be such that it is not always an easy matter to correct it.

Furthermore, in short wave work switches having the usual blades offer considerable capacity with the result that certain undesirable interaction between the coils of a system would occur.

It is the main object of the present invention to design a switch which may be used in high frequency work without introducing any of these undesirable effects.

According to this invention, recourse is had to mercury contacts for the purpose of changing over the coils required for different wave-lengths in broadcast receiver sets, said mercury contacts of desired number being united to form a group and being operated by a joint operating means such as a rotary knob or the like.

The invention will be better understood from a reading of the following specification in connection with the appended drawing in which,

Fig. 1 illustrates the invention as applied to a three switch system;

Fig. 2 illustrates another modification of the invention applied to a four switch system; and,

Fig. 3 illustrates a third modification of the invention applied to a three switch system.

In the embodiment of the invention illustrated in Fig. 1, three mercury contacts designated 1, 2 and 3 are disposed upon a disk 4 adapted to be rotated about a center or pivot 5. Each of the said mercury contacts comprises a vessel of glass or other suitable material 6, two terminals 7 and 8, and a small pool of mercury 9. In such a switch arrangement it is evident that only that particular contact will be operable which happens to point downward perpendicularly, while the others will remain inoperative.

In the embodiments of this invention illustrated in Figs. 2 and 3, a single preferably circular vessel or container is provided rather than separate constituent contact units as in Fig. 1, said substantially annular container being provided with a plurality of circumferential contacts or terminals.

Fig. 2 shows at 1 an annular glass tube upon which are arranged in symmetrical manner the four contacts or terminal pairs marked 2, 3, 4, and 5. The said glass tube or ring is suitably mounted upon a disk 6 which is pivotal about point 7. The mercury will always be located in the bottom part of the glass container and thus cause closure of the pair of terminals there located. By turning the container, the contact pairs 2, 3, 4 and 5 may be closed alternately and selectively.

In the embodiment of the invention shown in Fig. 3 the mercury holder or tube comprises a triangularly bent tube 1 which is provided with three terminal pairs 2, 3 and 4. It is, of course, to be understood that if a larger number of terminals are required, then the tube is given a correspondingly larger number of corners or sides.

The invention provides for exhausting the mercury tubes so that they will be substantially free from air and moisture with the result that the contact points will always be clean and free from oxidation.

While only thre embodiments of the invention have been shown, it is clear that other forms thereof could be constructed without departing from the spirit of the invention as defined in the following claim.

I claim:

A switch structure adapted for use in connection with signalling apparatus provided with change-over elements for tuning the apparatus to different frequency ranges and having no capacity reactance to affect the tuning of said apparatus, comprising a rotatable member, a plurality of normally open pairs of contacts related to said elements, each pair of contacts being enclosed within an evacuated container, a conducting fluid within the container for closing any desired set of contacts in accordance with the rotation of the rotatable member thereby connecting the related interchangeable elements in said circuit.

KARL WILHELM.