A. J. MEYER.

METAL SHELVING CONSTRUCTION.

APPLICATION FILED JUNE 6, 1922.

**1,435,321.** **Patented Nov. 14, 1922.**

3 SHEETS—SHEET 1.

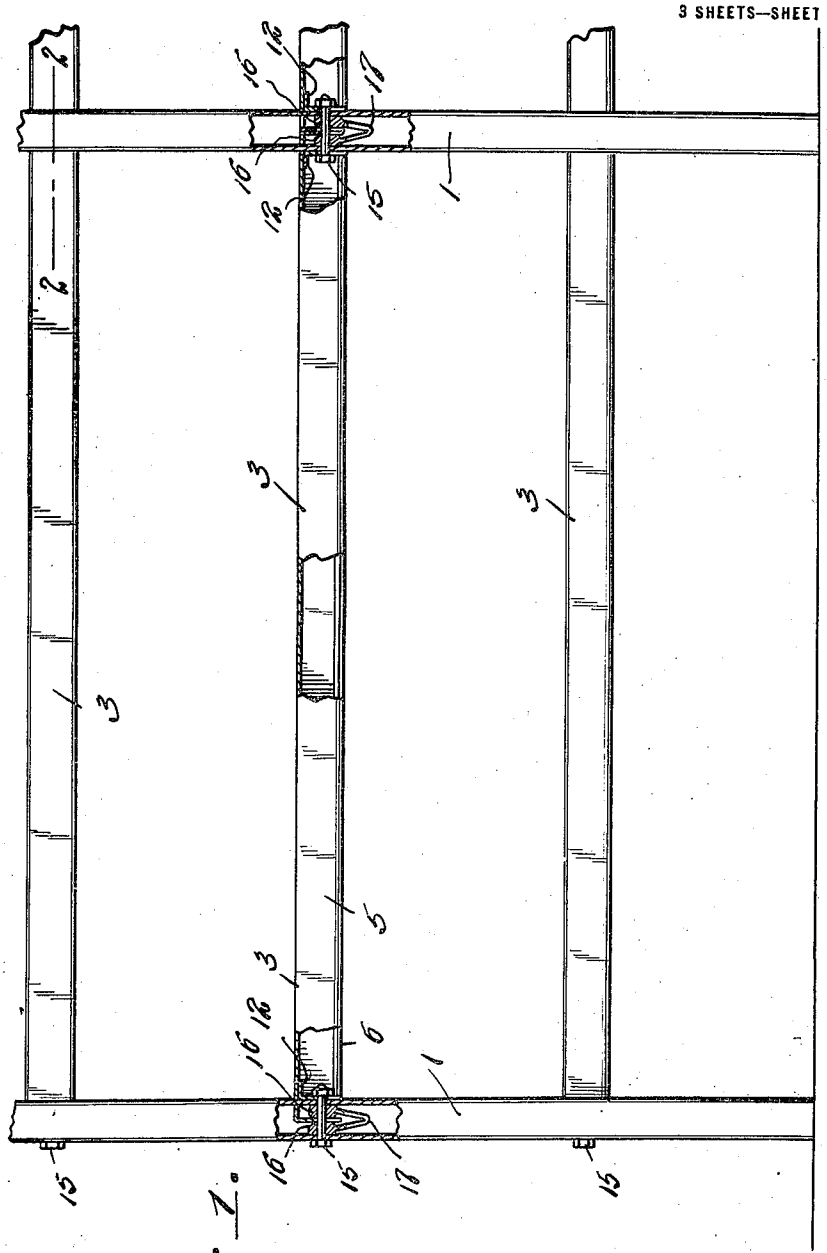


Fig. 1.

Witnesses:
F. L. Fox
H. Berman

Inventor
A. J. Meyer,
By Clarence A. O'Brien
Attorney

A. J. MEYER.

METAL SHELVING CONSTRUCTION.

APPLICATION FILED JUNE 6, 1922.

1,435,321. Patented Nov. 14, 1922.

3 SHEETS—SHEET 2.

Fig. 5.

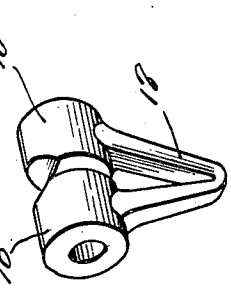


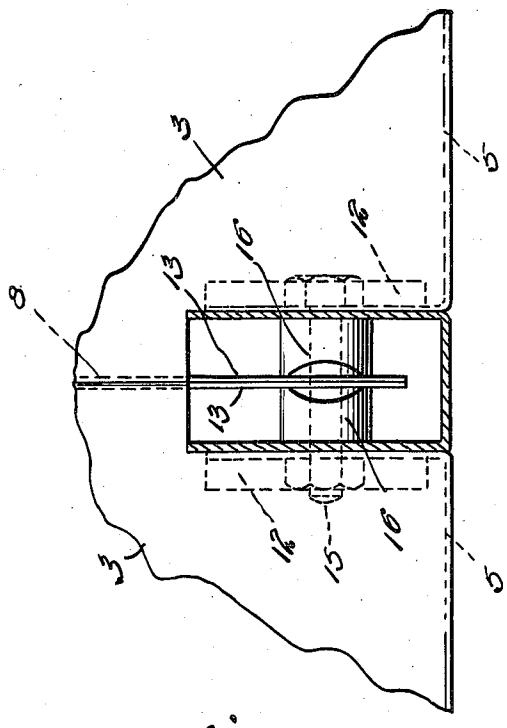


Fig. 3.

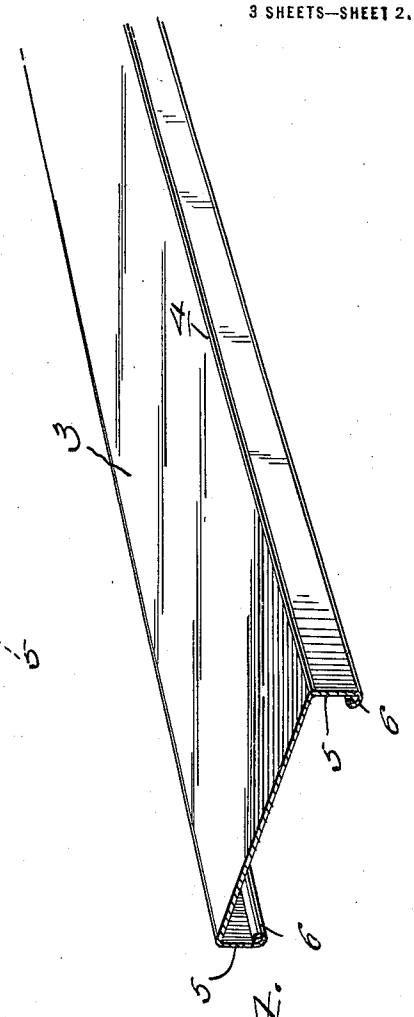


Fig. 4.

Witnesses:

F. L. Fox.

N. Berman

Inventor

A. J. Meyer,

By Clarence O'Brien

Attorney

A. J. MEYER.

METAL SHELVING CONSTRUCTION.

APPLICATION FILED JUNE 6, 1922.

1,435,321. Patented Nov. 14, 1922.

3 SHEETS—SHEET 3.

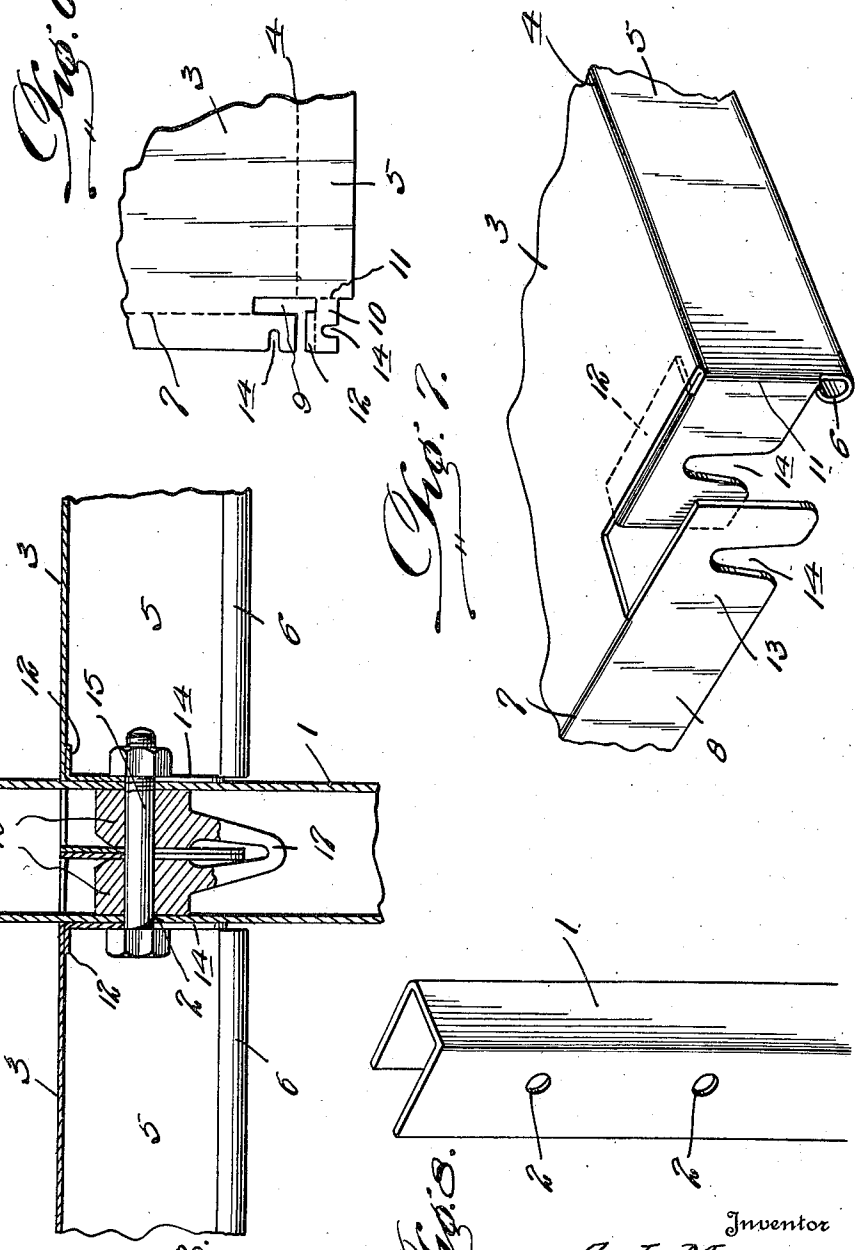


Witnesses:
F. L. Fox,
H Berman

Inventor
A. J. Meyer,
By Clarence A. O'Brien
Attorney

Patented Nov. 14, 1922. 1,435,321

# UNITED STATES PATENT OFFICE.

ANTHONY J. MEYER, OF ST. LOUIS, MISSOURI.

## METAL-SHELVING CONSTRUCTION.

Application filed June 6, 1922. Serial No. 566,343.

*To all whom it may concern:*

Be it known that I, ANTHONY J. MEYER, a citizen of the United States, residing at St. Louis, in the State of Missouri, have invented new and useful Improvements in Metal-Shelving Constructions, of which the following is a specification.

In carrying out the present invention it is my purpose to provide a construction of metal shelving wherein the shelves may be properly reinforced and quickly and conveniently assembled in shelving formation.

It is also my purpose to provide a metal shelving construction wherein the shelves may be quickly and easily removed and adjusted relatively one to another, so that they may be spaced apart the desired distance.

A further object of my invention is to improve and simplify the general construction of metal shelving and to provide a shelving wherein each shelf may be securely and properly reinforced at its ends and also in its longitudinal dimension.

With the above recited objects in view, and others of a like nature, the invention resides in the construction, combination and arrangement of parts set forth in and falling within the scope of the appended claims.

In the accompanying drawings:

Figure 1 is a front elevation of metal shelving constructed in accordance with my invention.

Figure 2 is a sectional view on the line 2—2 of Figure 1.

Figure 3 is a fragmentary vertical sectional view showing the connections between the meeting ends of two shelves and the supporting standard.

Figure 4 is a perspective view of one of the shelves.

Figure 5 is a perspective view of a detail of the invention.

Figure 6 is an enlarged fragmentary plan view of one end portion of the blank from which each shelf is formed.

Figure 7 is a perspective view showing the blank in Figure 6 folded.

Figure 8 is a similar view of one of the supporting standards.

Referring now to the drawings in detail, 1—1, designate vertical standards spaced apart in parallelism. Each standard 1 is formed of channel iron of U-shape in cross section, as clearly shown in Figure 8 of the drawings, and the side sections of each standard are formed with alining openings 2 spaced apart vertically.

The shelves are indicated by the numeral 3 and each shelf is formed from a sheet of metal substantially rectangular in outline. Each sheet of metal is bent at its longitudinal edges, as at 4, to provide depending flanges 5 that act to reinforce the shelf and the lower edges of the flanges are rolled, as at 6, in order to further strengthen the shelf. At each end the shelf is bent downwardly, as at 7, to provide a depending flange 8, the ends of which terminate flush with the flanges 5. At each corner the shelf is cut out, as at 9, and these cut-out portions open onto the side edges of the shelf. Each end flange 5 is formed with a tongue 10 which is bent inwardly, as at 11, to a position at right angles to the flange and to lie below the main body portion of the shelf, as clearly shown in Figure 7 of the drawings. The upper edge of each tongue 10 is formed with a right angularly disposed flange 12 that underlies and engages the main body portion of the shelf, so as to effectively strengthen the shelf at the corner. The tongue 10 lies parallel with the tongue 13 that is formed on the adjacent end of the flange 8, and these tongues 10 and 13 are formed with alining slots 14, by means of which the shelf is adapted to be secured to the standards.

After the blanks constituting the shelves have been stamped, as shown in Figure 6, and formed, as shown in Figure 7, they are in position to be connected to the uprights or standards, so that the shelf structure may be assembled and in assembling the shelf structure the uprights or standards 1—1 are properly positioned and the shelves arranged in horizontal position in the space between the uprights. In the positioning of the shelves with respect to the uprights the tongues 14 abut against the outer surface of the adjacent section of the upright, while the tongues 13 lie at a point approximately at the center of the space between the side sections of the upright, as clearly shown in Figures 2 and 3 of the drawings, and the tongues 13 of section of shelves that are placed in end to end contact with each other between the side sections of the uprights. The slots 14 in the tongues of the shelves aline with each other and with the desired set of openings 2 in the uprights, and

through these alining openings and slots are passed securing bolts 15, by means of which the shelves may be rigidly secured to the uprights. Between the tongues 13 and the inner surfaces of the side sections of the uprights are spacing collars 16 that encircle each bolt 15, and these spacing collars 16 are arranged end to end and spaced apart and held in spaced relation by V-shaped arms 17, as clearly shown in Figure 5 of the drawings. These spacing collars act in connection with the bolts to hold the parts tightly connected and in a rigid condition, thereby preventing accidental loosening of the connections between the shelves and the uprights.

After the parts have been assembled as just described the central sections of the uprights lie flush with the outer edges of the shelves, as clearly shown in Figures 1 and 2 of the drawings, so as to provide a uniform and unbroken surface at the point of connection between the shelves and uprights.

In practice, the uprights or standards are arranged at the front and rear edges of the shelves at the ends of the latter, so that the shelf structure when assembled and secured in assembled position will be maintained in proper condition.

While I have herein shown and described one preferred form of my invention by way of illustration, I wish it to be understood that I do not limit or confine myself to the precise details of construction herein shown and described, as modifications and variations may be made within the scope of the claims and without departing from the spirit of my invention.

Having thus described the invention, what is claimed as new, is:—

1. In shelf construction, a plurality of shelves arranged in horizontal position and disposed one above another, vertical uprights at the corners of the shelves, each upright being of substantially U-shape in horizontal cross section formed with alining openings in the side sections thereof spaced apart vertically, each shelf at each corner thereof being cut out and formed with tongues spaced apart in parallelism and arranged below the main body portion of the shelf at right angles thereto and formed with V-shaped slots, respectively, opening onto the lower edges thereof, said tongues being spaced apart and the innermost tongue being adapted to abut the outer surface of the adjacent side section of the upright, the inner tongue being arranged between the side sections of said upright and adapted to abut against the corresponding tongue of the next adjacent shelf arranged end to end therewith, and securing means passing through said slots and openings whereby the shelves may be held to said uprights.

2. In shelf construction, a plurality of shelves arranged in horizontal position and disposed one above another, vertical uprights at the corners of the shelves, each upright being of substantially U-shape in horizontal cross section formed with alining openings in the side sections thereof spaced apart vertically, each shelf at each corner thereof being cut out and formed with tongues spaced apart in parallelism and arranged below the main body portion of the shelf at right angles thereto and formed with V-shaped slots, respectively, opening onto the lower edges thereof, said tongues being spaced apart and the innermost tongue being adapted to abut the outer surface of the adjacent side section of the upright, the inner tongue being arranged between the side sections of said upright and adapted to abut against the corresponding tongue of the next adjacent shelf arranged end to end therewith, securing means passing through said slots and openings whereby the shelves may be held to said uprights, and spacing means between the last mentioned tongues and the inner surfaces of the side sections of said upright.

3. In shelf construction, a plurality of shelves arranged in horizontal position and disposed one above another, vertical uprights at the corners of the shelves, each upright being of substantially U-shape in horizontal cross section formed with alining openings in the side sections thereof spaced apart vertically, each shelf at each corner thereof being cut out and formed with tongues spaced apart in parallelism and arranged below the main body portion of the shelf at right angles thereto and formed with V-shaped slots, respectively, opening onto the lower edges thereof, said tongues being spaced apart and the innermost tongue being adapted to abut the outer surface of the adjacent side section of the upright, the inner tongue being arranged between the side sections of said upright and adapted to abut against the corresponding tongue of the next adjacent shelf arranged end to end therewith, securing means passing through said slots and openings whereby the shelves may be held to said uprights, each shelf being formed at its longitudinal edges with depending reinforcing flanges and having the lower edges of the flanges rolled for further reinforcement.

In testimony whereof I affix my signature.

ANTHONY J. MEYER.