July 6, 1954 B. S. BENGTSSON 2,683,198

ELECTROMAGNETIC RELAY

Filed Oct. 30, 1950

Fig. 1

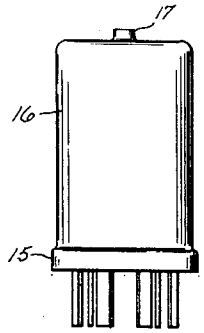

Fig. 2

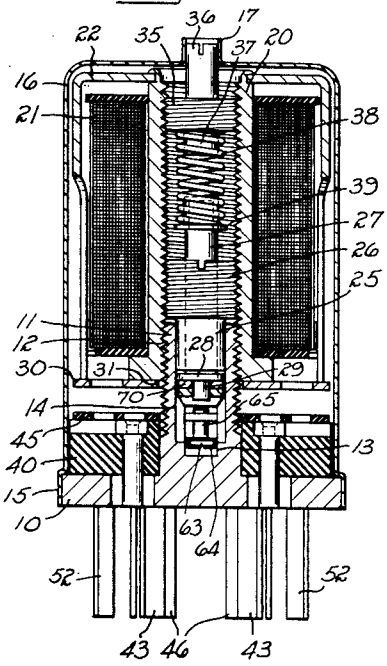

Fig. 3

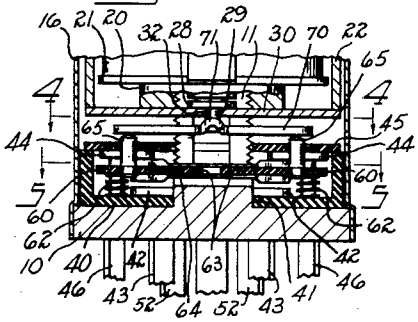

Fig. 4

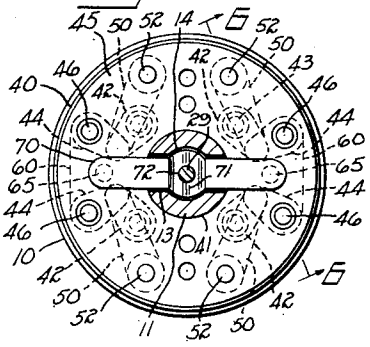

Fig. 5

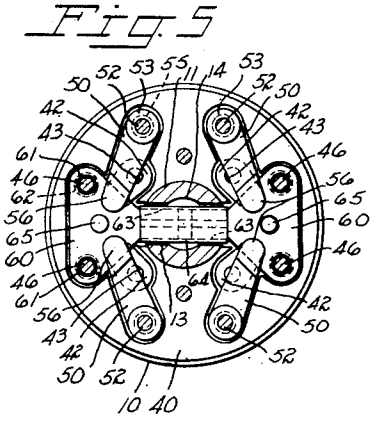

Fig. 6

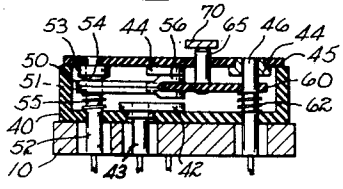

Inventor

BERTIL S. BENGTSSON

By

Lindsey and Prutzman

Attorneys

Patented July 6, 1954

2,683,198

UNITED STATES PATENT OFFICE

2,683,198

ELECTROMAGNETIC RELAY

Bertil S. Bengtsson, Hartford, Conn., assignor to The Hart Manufacturing Company, Hartford, Conn., a corporation of Connecticut

Application October 30, 1950, Serial No. 193,004

12 Claims. (Cl. 200—111)

1

The present invention relates to electromagnetic relays and, more particularly, to an improved and novel construction of the switch and switch operating members of an electromagnetic relay whereby the relay can be rendered effective for operation under extremely adverse conditions or to meet critical operating requirements.

Among the aims of the present invention is to provide a novel construction for electromagnetic relays which will permit an unusual compactness of size without sacrifice of operating efficiency, which will permit the relay to function in situations where available operating voltages and/or current are materially limited, which will permit the relay to be designed for operation under temperature conditions varying over an extreme range, and which will allow the relay to be installed in devices which are subject to rapid or abrupt movements or acceleration without danger of malfunctioning.

A further object of the invention is to provide an electromagnetic relay having the characteristics referred to which is formed of simple and easily fabricated elements and which may be assembled with a minimum of difficulty and expense, and yet which will be sufficiently rugged and reliable in operation.

Other objects will be in part obvious, and in part pointed out more in detail hereinafter.

The invention accordingly consists in the features of construction, combination of elements and arrangement of parts which will be exemplified in the construction hereafter set forth and the scope of the application of which will be indicated in the appended claims.

In the drawings:

Fig. 1 is a side view of an assembled electromagnetic relay embodying the present invention;

Fig. 2 is an enlarged vertical cross sectional view of the relay shown in Fig. 1;

Fig. 3 is a fragmentary vertical cross sectional view of the relay with the relay turned 90 degress from the position shown in Fig. 2;

Fig. 4 is a cross sectional view taken along the line 4—4 of Fig. 3;

Fig. 5 is a cross sectional view taken along the line 5—5 of Fig. 3; and

Fig. 6 is a cross sectional view taken along the line 6—6 of Fig. 4.

Referring to the drawings, a specific embodiment of an electromagnetic relay constructed in accordance with the invention is shown supported on a circular disclike base having a centrally disposed boss 11 which is externally threaded as shown at 12 and bifuracted by means of a transverse slot 13. A center bore 14 is also formed in the upper end of the threaded and bifurcated boss 11. To enclose the relay a cap 16 may be placed about the relay, the cap 16 being enlarged at 15 to telescopically engage the periphery of the base 10.

2

Threadably received on the upper end of the boss 11 and supported thereby is a core 20 about which is disposed a coil 21 for actuating the relay. A cuplike shell 22, which is open at its lower end, is attached to the upper end of the core 20 and surrounds the coil 21.

A bushing 25 having an enlarged threaded portion 26 is threadably received in the core 20 and extends into the center bore 14 in the boss 11. The bushing 25 provides a guideway for a plunger 27 extending axially of the core 20 and hence the coil 21. The plunger 27 is provided at its lower end with a circular flange 28 and a reduced section 29 in the nature of a depending stud. Attached to the plunger 27 is a circular diaphragm 30. In the specific embodiment, the diaphragm 30 is soldered to the surface of the circular flange 28. The diaphragm 30 is notched at 31 to receive the bifurcated boss 11 and it has a central aperture 32 through which the reduced portion 29 of the plunger may extend.

Disposed in the upper end of the core 20 is an adjusting screw 35 having a slotted extension 36 registering with a flanged opening 17 in the cap 16 whereby a turning tool, such as a screwdriver, may be inserted to turn the screw 35.

A depending stud 37 on the adjusting screw 35 forms a seat for one end of a spiral spring 38, the opposite end of the spring 38 being received on the upper end of the plunger 27 and abutting against a flange 39 thereon.

As will be apparent, the spring 38 normally forces the plunger 27 and hence the diaphragm 30 downwardly, whereas when the solenoid is energized the plunger 27 and diaphragm 30 are drawn upwardly. As illustrated in the drawings, the relay is in energized condition with the plunger 27 and diaphragm 30 drawn upwardly against the bias of spring 38.

Disposed on the base 10 is an insulating block 40 having suitable recesses for receiving the switch elements of the relay, to be described hereinafter. The insulating block 40 has a central aperture 41 to accommodate the boss 11.

Disposed on a bottom surface of the insulating block 40 are a plurality of stationary con-

tacts 42 which are in the nature of elongated plates and are provided with downwardly extending posts 43 extending through suitable apertures in the base 10, the posts 43 being flattened at their lower ends to provide suitable connecting terminals. Since the specific embodiment shown in the drawing is a four-pole, double-throw relay, there are four stationary contacts 42 provided.

Similar stationary contacts 44 are secured to an insulating cover plate 45 which extends across the top of the insulating block 40. The stationary contacts 44 are similarly provided with downwardly extending posts 46 which extend through apertures in the insulating block 40 and base 10, the posts 46 also being flattened at their lower extremities to provide suitable terminals. The four upper stationary contacts 44 are disposed in vertical alignment, respectively, with the four stationary lower contacts 42.

The movable contacts, which are adapted to be moved into engagement alternately with the upper stationary contacts 44 and the lower stationary contacts 42, are provided by four tonguelike members 50 which are apertured at 51 so as to be received on posts 52 which extend downwardly through suitable openings in the insulating block 40 and base 10 to provide connecting terminals. The posts 52 extend into the insulating cover plate 45 and are provided with a flange 53 having a parti-spherical lower surface 54 against which the movable members 50 may abut. The members 50 are biased upwardly into seated engagement with the surface 54 by springs 55 disposed about the posts 52 and engaging the base of the insulating block 40.

The tonguelike members 50 are bifurcated at 56 to form upper and lower contacting surfaces for engaging against the stationary contacts 44 and 42, respectively. The members 50 are disposed, of course, so that the bifurcated sections 56 are situated between the upper contacts 44 and the lower contacts 42.

The bifurcated sections 56 of the members 50 are engaged on generally triangular insulating carrier plates 60 which are apertured at 61 so as to accommodate the posts 46 of the upper stationary contacts 44. Springs 62, positioned on the posts 46, urge the carrier plates 60 upwardly so as to bring the members 50 in contact with upper contacts 44 and spaced from the lower contacts 42. The springs 55 assist somewhat in accomplishing this normal positioning of the members 50. The inner ends of the carrier plates 60 are provided with tail portions 63 which are received in a sleevelike clamp 64 whereby the two carrier plates 60 are maintained in substantial alignment.

Approximately centrally of each of the carrier plates 60 is a pin 65 extending upwardly through suitable apertures in the insulating cover plate 45 by means of which the carrier plates 60 may be actuated. As a result of this construction, when the pins 65 are depressed downwardly, the carrier plates 60 are likewise moved downwardly to carry the movable members 50 into engagement with the lower stationary contacts 42. When the pressure on the pin 65 is removed, the springs 62 and 55 return the carrier plates 60 and movable members 50 to the position shown in Fig. 6 of the drawings, in which position the members 50 are in contact with the upper stationary contacts 44.

The means for depressing the pins 65 comprises a yoke 70 which extends across the upper

ends of the pins 65 through the bifurcation of the boss 11. The central portion of the yoke 70 is arcuately curved to form a bearing surface 71 which may be engaged by the diaphragm 30. The center of the yoke 70 has an opening 72 through which the lower end or stud 29 of the plunger 27 may extend to assist in positioning the yoke 70.

As will be apparent, the mounting of the yoke 70 is such that the yoke will always be retained in operating position engaging the tops of the pins 65 by reason of the slot 13 of the boss 11 which prevents turning or lateral movement of the yoke and the lower end or stud 29 of the plunger 27, which prevents longitudinal displacement of the yoke. At the same time the yoke is tiltable about its midpoint defined by the arcuate bearing surface 71. When the solenoid of the relay is de-energized, the plunger 27 and diaphragm 30 are thrust downwardly under the influence of spring 38 causing the diaphragm 30 to engage upon the curved bearing surface 71 of the yoke 70. This moves the yoke 70 downwardly so as to actuate the carrier plates 60 and hence the movable contact members 50, causing the members 50 to make contact with the lower stationary contacts 42, as previously described. Inasmuch as the yoke 70 may pivot about its midpoint, it is a distinct advantage of the present invention that the result will be to equalize the pressure on the pins 65, thus insuring that a full contact will be made through the agency of each of the triangular carrier plates 60. At the same time, the carrier plates 60 may tilt at right angles to the yoke 70 by reason of the spring supports 62. Accordingly, the contact pressure on both sides of the carrier plates 60 is equalized. The result is that the downward pressure exerted on the yoke 70 by the diaphragm 30 will produce an equal pressure on each of the contacts of the relay, thus insuring a good contact at all points.

It has been found that, by constructing an electromagnetic relay in accordance with the present invention, the amount of movement or throw required to actuate the switch may be reduced to as little as .0075", and a good contact will be provided at all points. Since the normal position of the relay is maintained by a relatively heavy spring 38, it is unlikely that the relay can be actuated by jars or jolts to the mechanism. At the same time the extremely small throw required to actuate the relay permits the relay to be actuated even though a very small energizing voltage and/or current is available.

The relay is formed of easily fabricated elements and may be assembled and adjusted with a minimum of difficulty and expense. The relay can be constructed to withstand great extremes of temperature conditions and, in general, will function satisfactorily under extremely adverse operating conditions.

As many changes could be made in the above construction and many apparently widely different embodiments of this invention could be made without departing from the scope thereof, it is intended that all matter contained in the above description or shown in the accompanying drawings shall be interpreted as illustrative and not in a limiting sense.

It is also to be understood that the language used in the following claims is intended to cover all of the generic and specific features of the invention herein described and all statements of the scope of the invention which, as a matter

of language, might be said to fall therebetween.

I claim as my invention:

1. In an electromagnetic relay, two pairs of spaced apart stationary contacts having their contact surfaces in substantially the same plane, a movable contact arm disposed adjacent each of the stationary contacts for movement into and out of engagement therewith, a pair of carrier plates connected, respectively, to two of said arms, spring means forming a floating support for the carrier plates, means for moving the plates including a yoke pivotally engaging the plates and extending between the same, said yoke having an arcuate bearing surface extending transversely thereof and actuating means engageable with said bearing surface.

2. In an electromagnetic relay, a pair of stationary contacts, a pair of movable contact arms movable simultaneously into and out of contact, respectively, with said stationary contacts, said contact arms being provided with bifurcated end portions, a carrier plate received in said bifurcated end portions for positioning the movable contact arms, spring means forming a floating support for the carrier plate, means for moving the plate, including a member pivotally engaging the plate, actuating means, and means forming a tiltable connection between said member and said actuating means.

3. In an electromagnetic relay, two pairs of spaced apart stationary contacts having their contact surfaces disposed in substantially the same plane, a plurality of movable contact arms pivotally supported at one end and having a bifurcated free end extending, respectively, over said stationary contacts, a pair of carrier plates extending, respectively, into the bifurcated ends of two of said arms for positioning same, means forming a floating support for the carrier plates, and means for moving the plates including a tiltable yoke extending between the plates and having an arcuate bearing surface, and actuating means engageable with said bearing surface.

4. In an electromagnetic relay comprising a pair of stationary contacts and a pair of movable contact arms movable simultaneously into and out of contact, respectively, with said stationary contacts, a carrier plate connected to said arms, means forming a yieldable and tiltable support for the carrier plate normally maintaining the arms out of engagement with the stationary contacts, and means for moving the plate comprising a member having a tiltable connection with the plate, spring means urging the member in a plate depressing direction, said member having an arcuate bearing surface extending transversely thereof, and actuating means engageable with said bearing surface.

5. In an electromagnetic relay, stationary contact members, movable contact arms movable simultaneously into and out of contact with said stationary contacts, said contact arms being provided with bifurcated end portions, a carrier plate received in said bifurcated end portions, means forming a resilient and tiltable support for the carrier plate normally maintaining the arms out of engagement with the stationary contacts, a movable member having a tiltable connection with said plate, means for actuating said member, and means forming a tiltable connection between said member and said actuating means.

6. In an electromagnetic relay, two pairs of spaced apart stationary contacts having their contact surfaces in substantially the same plane,

a movable contact arm disposed adjacent each of the stationary contacts for movement into and out of engagement therewith, a pair of carrier plates connected, respectively, to two of said arms, means forming a resilient and tiltable support for the carrier plates normally maintaining the arms out of engagement with the stationary contacts, a yoke extending between the plates and having a tiltable connection therewith, means for actuating the yoke, and means forming a tiltable connection between the yoke and the last-named means.

7. In an electromagnetic relay, two pairs of spaced apart stationary contacts having their contact surfaces in substantially the same plane, movable contact arms, each having a bifurcated end portion disposed adjacent one of the stationary contacts for movement into and out of engagement therewith, a pair of carrier plates extending, respectively, into the bifurcated end portions of two of the contact arms, means forming a resilient and tiltable support for the carrier plates normally maintaining the arms out of engagement with the stationary contacts, a yoke extending between the plates and operatively connected thereto, means for actuating the yoke, and means forming a tiltable connection between the yoke and the last-named means.

8. In an electromagnetic relay, a base, stationary lower contacts supported on the base, corresponding upper stationary contacts spaced above the first-named stationary contacts, movable contact arms extending between pairs of stationary contacts, a carrier plate connected to said arms, means forming a resilient and tiltable support for the carrier plate and normally maintaining the contact arms in contact with the upper stationary contacts, and a member having a tiltable connection with said plate and having means forming a tiltable connection with actuating means operable to depress said member.

9. In an electromagnetic relay, a base, stationary lower contacts supported on the base, corresponding upper stationary contacts spaced above the first-named stationary contacts, movable contact arms extending between pairs of stationary contacts, a pair of carrier plates connected to adjacent contact arms, spring means forming a yieldable and tiltable support for the plates and normally maintaining the contact arms in contact with the upper stationary contacts, a yoke pivotally engaging the plates and extending therebetween, means for depressing the yoke, and means forming a tiltable engagement between the last-named means and the yoke.

10. In an electromagnetic relay, a base, two pairs of stationary contacts supported on the base, two pairs of corresponding stationary contacts supported, respectively, in substantially superposed alignment with said first-named stationary contacts, four movable contact arms tiltably supported at one end and provided with bifurcated portions at the other end, said bifurcated portions being disposed, respectively, between aligned contacts, a pair of carrier plates extending, respectively, into the bifurcated end portions of two of the movable contact arms, spring means forming a floating support for the plates and urging the plates upwardly to engage the contact arms with the said superposed stationary contacts, a yoke pivotally engaging the plates and extending therebetween, said yoke having an arcuate bearing surface intermediate

its ends, a diaphragm for engaging said arcuate bearing surface, spring means urging the diaphragm against the bearing surface, and means for withdrawing the diaphragm.

11. In an electromagnetic relay, a base, stationary lower contacts supported on the base, corresponding upper stationary contacts spaced above the first-named stationary contacts, movable contact arms having bifurcated end portions extending between pairs of stationary contacts, a pair of carrier plates extending into the bifurcated end portions of adjacent contact arms, spring means forming a yieldable and tiltable support for the plates and normally maintaining the bifurcated end portions of the contact arms in contact with the upper stationary contacts, a yoke extending between the plates, means forming a tiltable connection between the plates and the ends of the yoke, a member biased toward the yoke for depressing the yoke and carrier plates to cause the contact arms to move into contact with the lower stationary contacts, means forming an engagement between the member and the yoke permitting tilting movement of the yoke, and means for withdrawing the member.

12. In an electromagnetic relay, a base, stationary lower contacts supported on the base, corresponding upper stationary contacts spaced above the first-named stationary contacts, movable contact arms having bifurcated end portions disposed between pairs of stationary contacts, a

pair of carrier plates connected together and extending into the bifurcated end portions of adjacent contact arms, spring means yieldably and tiltably supporting the plates and normally maintaining the contact arms in contact with the upper stationary contacts, a yoke extending between the plates having a centrally disposed arcuate bearing surface, a guideway for the yoke, a diaphragm and engageable with the arcuate bearing surface of the yoke, a plunger attached to the diaphragm and spring means engaging the plunger thereby urging the diaphragm against the yoke.

References Cited in the file of this patent

UNITED STATES PATENTS

Number	Name	Date
1,932,164	Petit	Oct. 24, 1933
2,009,892	Leece	July 30, 1935
2,104,399	Kuhn	Jan. 4, 1938
2,279,395	Gardiner	Apr. 14, 1942
2,334,514	Snavely	Nov. 16, 1943
2,423,387	Johnson	July 1, 1947
2,444,198	Hasselhorn	June 29, 1948
2,489,185	Johnson	Nov. 22, 1949
2,498,614	Tregoning	Feb. 21, 1950
2,538,020	Lomholt	Jan. 16, 1951

FOREIGN PATENTS

Number	Country	Date
28,695	Great Britain	June 1, 1911