June 9, 1925. 1,540,830

A. K. DAVIS

ADVERTISING DEVICE

Filed April 23, 1921 4 Sheets-Sheet 1

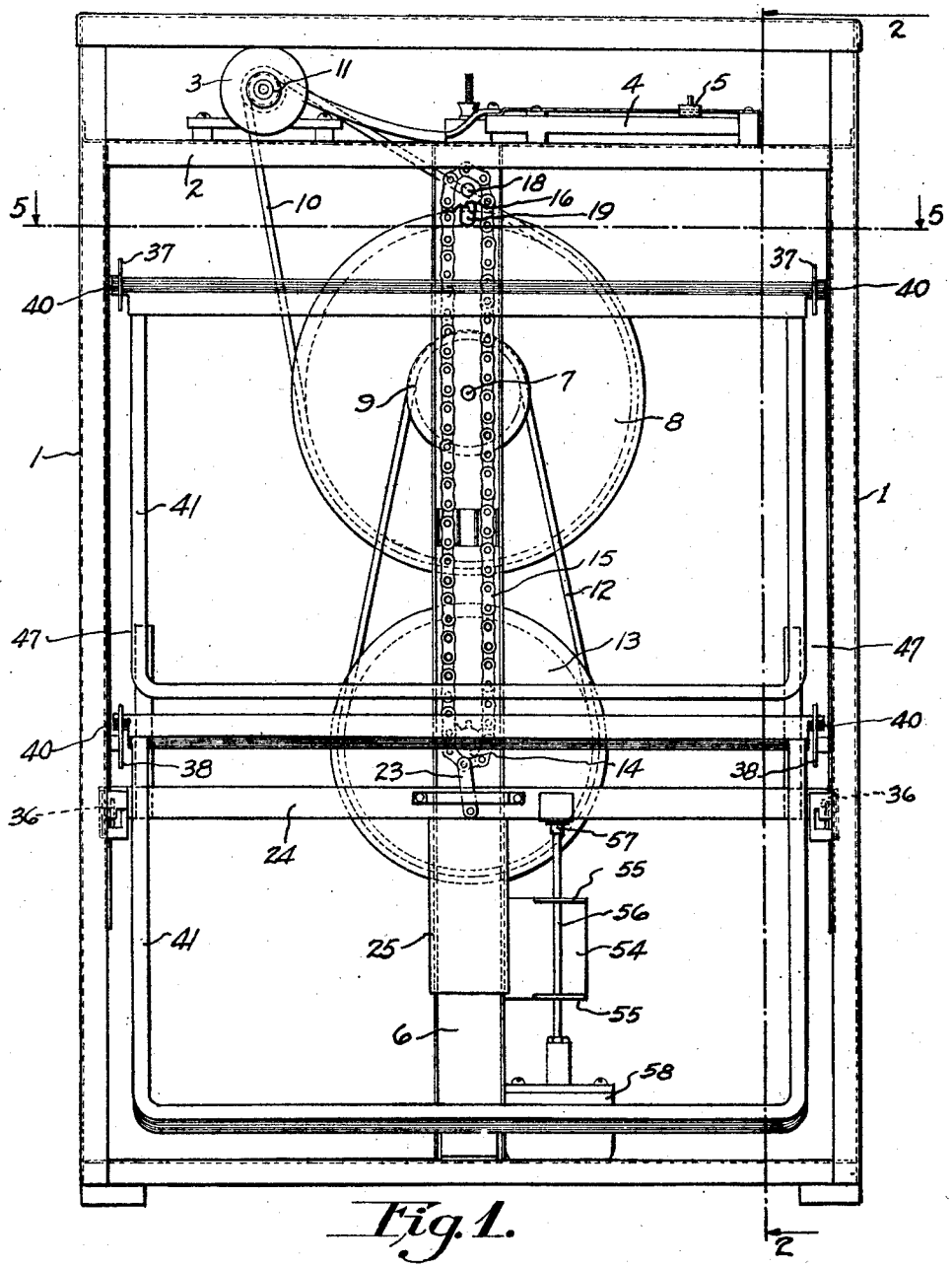

Fig. 1.

INVENTOR.

Albert K. Davis.

BY

Charles E. Wilson

ATTORNEY.

June 9, 1925. 1,540,830

A. K. DAVIS

ADVERTISING DEVICE

Filed April 23, 1921 4 Sheets-Sheet 2

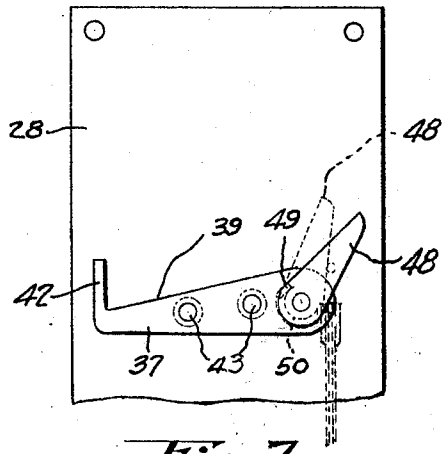

Fig. 7.

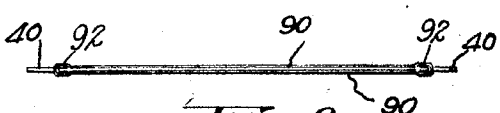

Fig. 8.

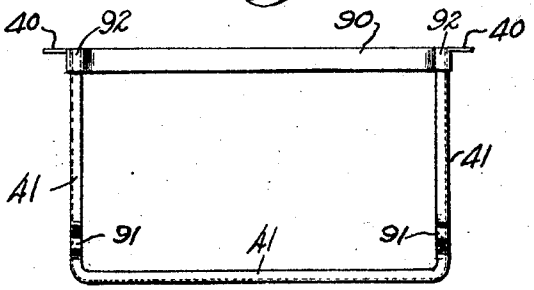

Fig. 9.

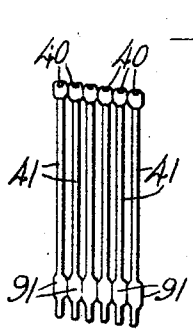

Fig. 11.

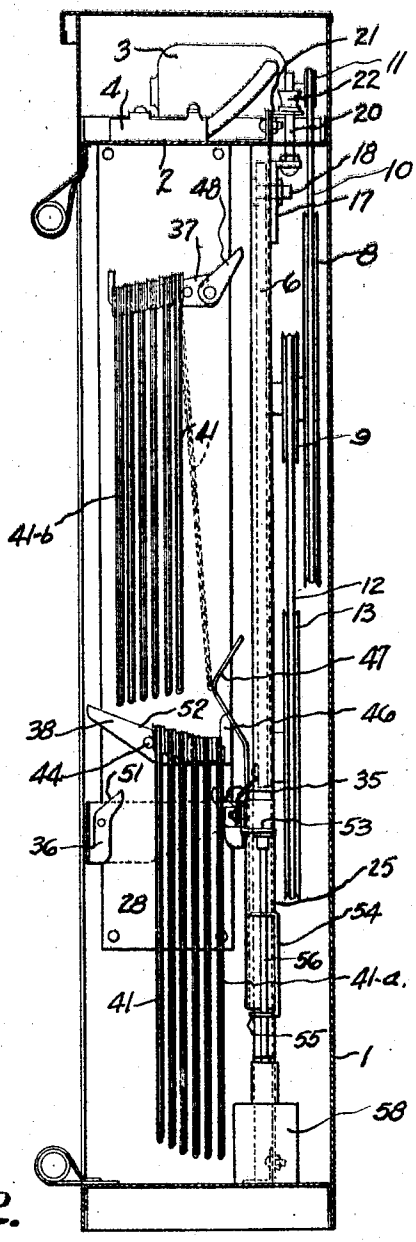

Fig. 2.

INVENTOR.

Albert K. Davis.

BY

Charles E. Wisney

ATTORNEY.

June 9, 1925. 1,540,830

A. K. DAVIS

ADVERTISING DEVICE

Filed April 23, 1921 4 Sheets-Sheet 3

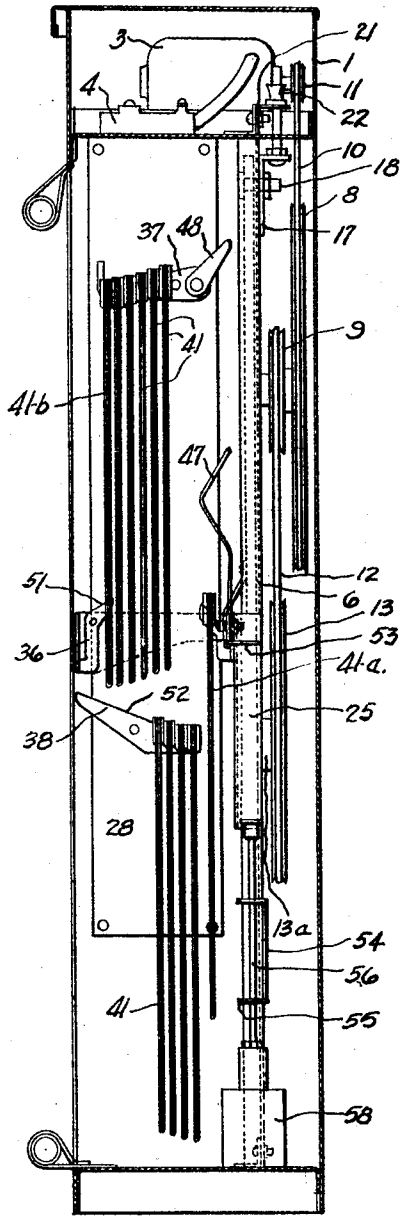

Fig. 3

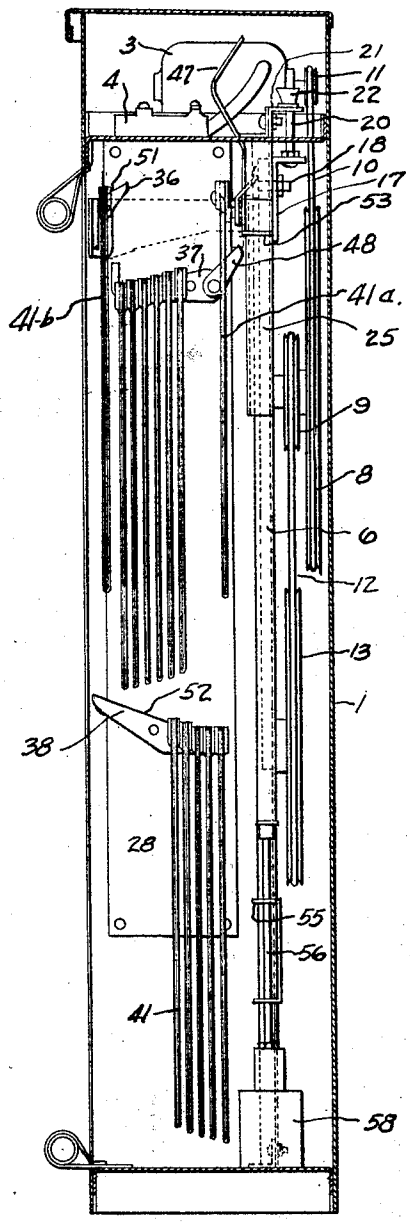

Fig. 4

INVENTOR.

Albert K. Davis

BY

Charles E. Wisner

ATTORNEY.

June 9, 1925. 1,540,830

A. K. DAVIS

ADVERTISING DEVICE

Filed April 23, 1921 4 Sheets-Sheet 4

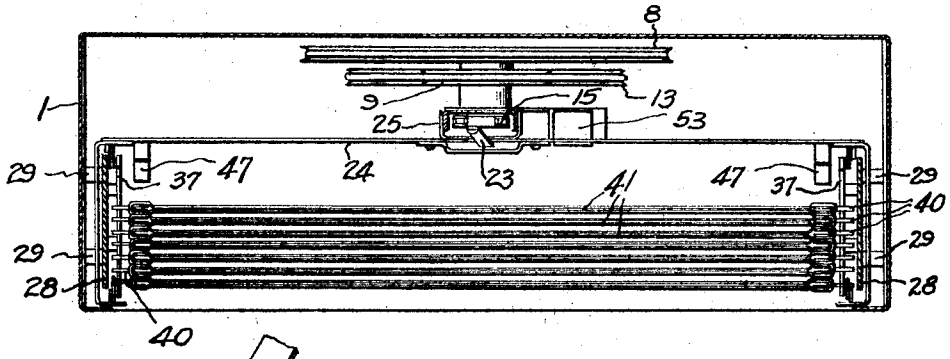

Fig. 5.

Fig. 6.

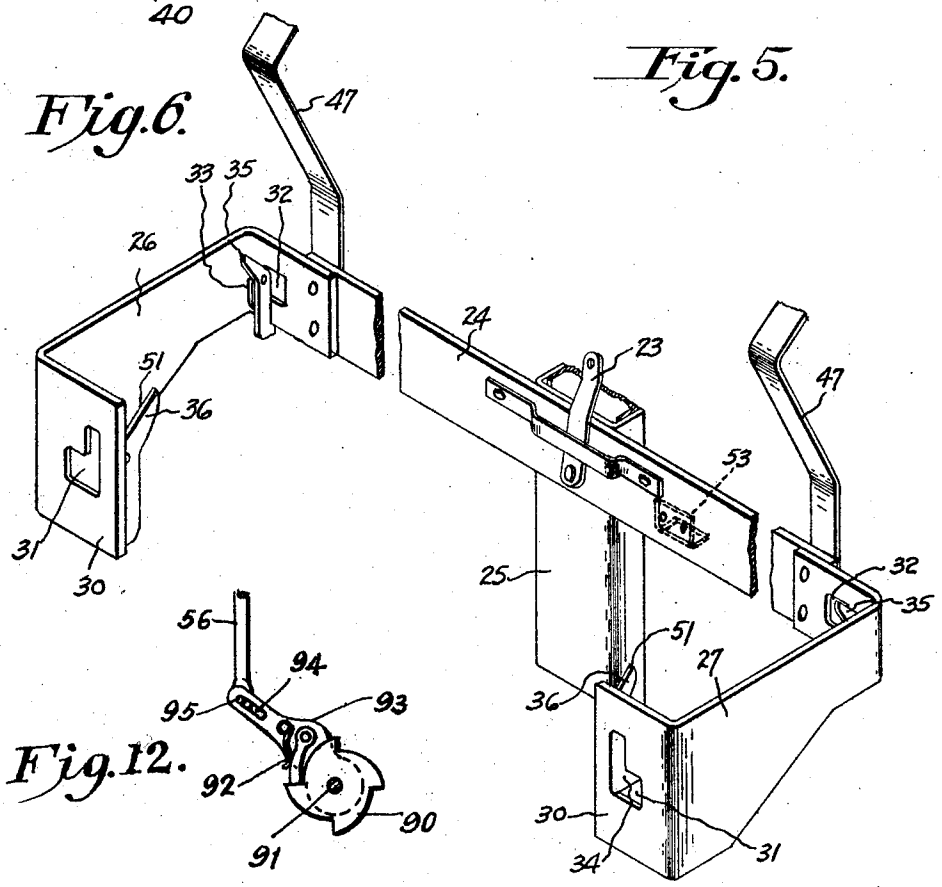

Fig. 12.

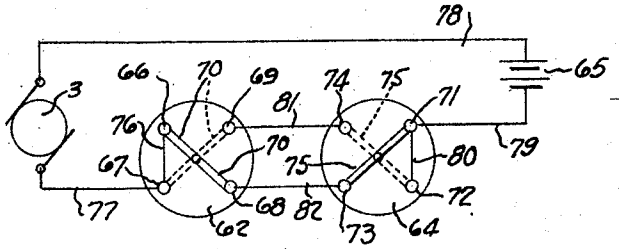

Fig. 10.

INVENTOR.

Albert K. Davis.

BY

Charles E. Thomas

ATTORNEY.

Patented June 9, 1925. 1,540,830

UNITED STATES PATENT OFFICE.

ALBERT K. DAVIS, OF BUFFALO, NEW YORK.

ADVERTISING DEVICE.

Application filed April 23, 1921. Serial No. 464,032.

To all whom it may concern:

Be it known that I, ALBERT K. DAVIS, a citizen of the United States, residing at Buffalo, county of Erie, State of New York, have invented a certain new and useful Improvement in Advertising Devices, and declare the following to be a full, clear, and exact description of the same, such as will enable others skilled in the art to which it pertains to make and use the same, reference being had to the accompanying drawings, which form a part of this specification.

This invention relates to advertising devices and an object of the invention is to provide a device for displaying successively a series of cards or mats bearing advertising matter or other matter for display each of which is exposed to view for a certain length of time. A further object of the invention is to provide a device of the character stated that is simple in construction and automatic in operation and that occupies but small floor space adapting the device to be used in show windows, as an act annunciator for theatres and other places of similar nature.

The device preferably is formed of a framework provided with a pair of oppositely inclined guideways, one above the other arranged in parallel relation upon opposite sides of the framework on which the rods of the card supporting frames are adapted to ride and down which they travel by gravity. A card on each of the upper and lower sets of guideways is exposed to view at the same time and a transfer device or carrier is reciprocatingly mounted on the framework and adapted to move a card and frame from the front of the upper guideways and deposit it upon the lower guideways, and also remove a card from the lower guideways and deposit it on the upper guideways. Thus by reciprocating the carrier the cards are successively shown and each is exposed to view in consecutive order for a considerable period, as the card is first exposed to view on the upper guideways, is continued in view while being deposited on the lower guideways and remains in view until a succeeding card is deposited on the lower guideways. This arrangement of the cards in banks, one above the other also enables a large number of cards to be carried in much smaller space horizontally than if carried in a single bank.

A further object of the invention is to provide an advertising device of the character described in which the operating mechanism is adapted to be automatically stopped to display the exposed card to view for an indeterminate period, a switch being provided whereby the device may be operated independently of the automatic stop mechanism. These and other objects and the several novel features of the invention in its preferred form are hereinafter more fully described and claimed and shown in the accompanying drawings in which—

Fig. 1 is a front view of an advertising device embodying my invention.

Fig. 2 is a section taken on line 2—2 of Fig. 1.

Fig. 3 is a section similar to Fig. 2 to show the operation of the device.

Fig. 4 is a section similar to Fig. 3.

Fig. 5 is a section taken on line 5—5 of Fig. 1.

Fig. 6 is a perspective view of the carrier for changing the advertising cards.

Fig. 7 is a detail of one of the upper guideways.

Fig. 8 is a plan view of one of the card carrying frames.

Fig. 9 is an elevation thereof.

Fig. 10 is a wiring diagram of the three way switch for operating the device.

Fig. 11 is an end view of a series of card frames showing the means for spacing the same.

Fig. 12 is a view showing the actuator for a switch in the motor circuit.

The device consists of a casing 1 in the upper end of which is mounted a shelf 2 on which is supported an electric motor 3 and rheostat 4 connected thereto. The rheostat 4 consists of a resistance coil over which a contact member 5 is movable to increase or diminish the current supply to the electric motor 3 and vary the speed of operation thereof. Supported within this casing is an upright channel member 6 which is secured to the shelf 2 at the upper end and to the casing 1 at the lower end. Rotatably mounted in the upright member 6 is a stub shaft 7 on which is secured a large pulley 8 and a small pulley 9. A belt 10 is provided connecting the pulley 11 of the electric motor to the large pulley 8, a belt 12 being also provided connecting the small pulley 9 to a pulley 13 which is secured to a stub shaft 13ª rotatably mounted in the upright

6, a sprocket 14 being also secured on the said stub shaft. A sprocket chain 15 is provided meshing with the sprocket 14 and extends upwardly and over a sprocket 16 which is secured on a shaft 18 rotatably mounted in a block 17 as shown more particularly in Fig. 2. The member 6 is provided with a slot 19 through which the shaft 18 extends and the block 17 is provided with a threaded rod 20 extending upwardly through the shelf 2 and through a bracket 21 mounted thereon. A nut 22 is provided in threaded relation with the rod 20 and by turning the nut the rod 20 and block 17 may be moved upwardly or downwardly to move the shaft 18 and sprocket 16 in the slot 19 to increase or decrease the tension on the chain 15. Pivotally secured to one of the links of the chain 15 is a pitman 23 which is also pivotally connected to a carrier 24. The carrier 24 is provided with a channel shaped portion 25 which fits over the upright member 6 and provides a guide for the carrier. The carrier, as shown more particularly in Fig. 6, is provided at the ends with members 26 and 27 which extend behind the frame members 28 which are secured to the casing 1 by the supports 29, as shown more particularly in Fig. 5. Each of these members 26 and 27 are provided with an inturned end 30. The members 26 and 27 are each stamped out at 31 and 32 to provide lugs 33 and 34 upon which the catches 35 and 36 are pivoted. These catches 35 and 36 are so positioned as to ride upon movement of the carrier between the frame members 28 and the upper and lower guide members 37 and 38 respectively. The upper guide members 37, as shown more particularly in Fig. 7, are each provided with an inclined face 39 extending toward the front of the machine and down which the rod ends 40 of the card frame 41, shown more particularly in Figs. 8 and 9, are adapted to ride. Each member 37 is provided with an upturned end 42 providing a stop for the card frames and each of the members 37 is secured in spaced relation with the corresponding frame member 28 on the rods 43.

The guideways 38 are also secured in spaced relation with the frame members 28 on the rods 44. These guide members 38, as shown more particularly in Fig. 2, are provided with inclined faces 52 tending to direct the card frames 41 toward the rear of the machine, an upturned end 46 being provided to prevent the card frames from moving off the guideways. As shown more particularly in Fig. 1, a guide member 37 is provided at each side of the machine which are both identically the same in form and adapted to receive the rod ends 40 of the card frames 41. These card frames 41 are channel shaped in cross section and the cards bearing the advertising matter are slipped through between the upper cross members 90 and into the U-shaped channel member 41. As shown in Figs. 9 and 11 the channel member 41 is enlarged at 91 in each vertical extending end and the frames are also provided with enlargements 92 at the upper end as shown more particularly in Fig. 11. By means of the enlargements 91 and 92 the card frames are spaced apart on the racks and the lettering on the faces of the cards is thus prevented from being rubbed off. Another object of providing these enlargements 91 and 92 is to prevent the frames from catching on one another during travel which would tend to displace the frames and cause the operating parts of the machine to jam. A short wire or rod 40 is brazed onto each upper end of the frame as shown in Figs. 8 and 9 adapting the frames to be supported in the racks thereby and by means of the wire ends 40 being prevented from movement toward either side of the machine by the side plates 28 the card frames are held in alignment one behind the other as shown more particularly in Fig. 1. There are also two guide members 38 which are positioned in correct relation and in alignment to direct the card frames 41 toward the rear of the machine. The carrier as shown in Fig. 6, is also provided with a pair of members 47 which are positioned opposite the edges of the card frames 41 as shown in Fig. 1 which are adapted as shown in Fig. 2 to move up and down with the carrier and prevent any of the card frames from swinging out into the path of travel of the carrier. Pivotally mounted on the guideway 37 is an arm 48 having a depending lug 49 adapted to ride in a slot 50 shown more particularly in dotted lines in Fig. 7.

In operation the carrier will be first considered in the lowermost position shown in Fig. 2. At this time the electric motor is set in operation which, by means of the belt 10, rotates the pulleys 8 and 9 and by means of the belt 12 the pulley 13 is rotated which rotates the sprocket 14 and drives the chain 15. As the chain 15 moves, the pitman 23 is carried upward, thereby moving the carrier 24 upward on the frame member 6 as a guide. As the ends of the catches 35 pass by the guideways 38 the rod ends 40 of the card frame 41^a are caught by the catches 35 and the card frame is carried upwardly by the carrier as shown in Fig. 3. As the carrier continues to travel upwardly to the position shown in Fig. 4, the catches 36 engage the rod ends 40 of the card frame 41^b at the forward end of the guideways 37 and lift the same therefrom. Due to the inclined face 51 of the catches 36 the frame 41^b travels down the same until stopped by the inturned ends 30 of the carrier 24. At the same time as the card frame 41^a is passing

the rear of the guideways 37 the pivoted arms 48 are contacted by the rod ends 40 thereof and moved to the position shown in dotted lines in Fig. 7, which allows the card frame 41ª to pass thereby to the uppermost position shown in Fig. 4. As the pitman 23 travels around the sprocket 16 and starts on the downward movement the carrier is moved downward whereupon the rod ends 40 of the card frame 41ª are engaged by the members 48 which guide the card frame 41ª onto the guideways 37. At the same time the card frame 41ᵇ being at the bottom of the inclined faces 51 of the catches 36, is allowed to pass by the guideways 37 without interference, the outer ends of the catches 36 striking the rod ends of the next adjacent card frame which tilts the catches 36 on the pivots therefor sufficiently to allow the same to pass without interference. As the carrier continues downward to the lowermost position the frame 41ᵇ is picked from the catches 36 by the extending ends of the guideways 38 and then rides down the angular faces 52 until in contact with the next adjacent card frame. As the catches 35 pass the inner ends of the guideways 38 the rod ends 40 of the adjacent card frame are engaged by the catches which are tilted by the said rod ends sufficient to allow the catches to pass thereby. It will thus be noted that upon each complete reciprocation consisting of an upward and corresponding downward movement of the carrier 24, a card and card frame are moved from the guideways 38 and deposited on the guideways 37 and at the same time a card and card frame are removed from the guideways 37 and deposited on the guideways 38. By this construction the faces of two cards are always exposed to view and by adjusting the speed of operation of the motor by means of the rheostat the interval in which the cards are exposed before being changed may be varied to suit the operator.

This machine may be easily adapted for use as a theatre annunciator, for announcing the different acts in a vaudeville theatre in correct order. For this purpose the machine is generally placed upon each side of the stage or secured to the wall adjacent thereto and when the device is to be used as an act annunciator the casing is so formed as to cover the lower card and leave the front card on the upper guideways exposed to view. To allow the card announcing the act to remain in view during the act I provide an automatic switch mechanism for stopping the operation of the device which consists of a bracket 53 shown more particularly in Figs. 2 and 6, which is secured to the carrier 24. A bracket 54, shown more particularly in Figs. 1 and 2, is secured to the frame member 6 and is provided with a pair of apertured lugs 55 through which a rod or plunger 56 extends and which form a guide for the said plunger. This plunger is provided with a head 57 adapted to be engaged by the bracket 53 when in the lowermost position and downward movement of the plunger 56 is adapted to throw a snap switch 62 contained within the casing 58 the snap switch and wiring therefor being shown more particularly in Fig. 10. A pair of wires 78 and 79 are connected to a suitable source of current 65, the wire 78 leading to the electric motor 3. A conduit 77 is provided leading from the motor and is connected with a contact 67 on the snap switch 62 and a conduit 76 is provided connecting the contacts 66 and 67 the switch 62 being also provided with contacts 68 and 69. A diagonal snap switch member 70 of the switch 62 is provided adapted to connect the contacts 66 and 68 and is also adapted to be turned one-fourth a turn to connect the contacts 67 and 69. The switch is so constructed that upon each downward movement of the plunger 56 the member 70 is turned one-fourth a turn. The switch having the switch member 70 and the actuator therefor shown in Fig. 12 are preferably within the casing 58. As will be understood from Fig. 12 the actuator preferably consists of a ratchet 90 on the shaft 91 on which the switch member 70 is secured. A spring-pressed pawl 92 is adapted to engage the notches of the ratchet wheel 90 and this pawl is carried on an arm 93 pivoted to the shaft, the outer end of which is slotted as indicated at 94 to receive a pin 95 provided on the lower end of the rod 56. With this construction each downward movement of the rod 56 turns the actuator 90 one-fourth of a turn and thereby turns the switch member 70 successively as above set forth. A second manually operated snap switch 64 is provided at any suitable point and usually at a distance from the switch 62. A conduit 81 is provided connecting the contacts 69 and 74 and a conduit 82 is also provided connecting the contacts 68 and 73. A pair of contacts 71 and 72 are also provided on the switch 64 and a conduit 80 is provided connecting the same. A conductor 79 is provided connecting the contact 71 with the source of current and a diagonal switch member 75 similar to the member 70, is also provided adapted to be turned by hand to the position shown in full or dotted lines in Fig. 10. With the device set as shown in Fig. 10 the flow is from the source of current 65 through the line 79, contact 71, member 75, contact 73, conduit 82, contact 68, member 70, contact 66, conduit 76, contact 67, conductor 77 thence through the motor 3 and back to the source of current through the line 78. When the motor is thus turned on the carrier, as shown in Fig. 2, will travel up-

wardly carrying the card frame 41[a] up and onto the guideway 37 and upon return carries the card frame 41[b] down onto the guideway 38, in which position it is behind a front panel placed over the casing (not here shown) and the succeeding card on the guideways 37 is the only card exposed to view. These cards are arranged on the guideways so that the cards are presented to view in the order of the acts. As the carrier moves downward after depositing the card frame 41[b] on the guideways 38 the bracket 53 contacts the head 57 of the plunger 56 and moves the same downward which throws the switch member 70 to the position shown in dotted lines in Fig. 10, which breaks the circuit and stops the machine and leaves the card on the upper guideways 37 exposed to view. This card will remain in view as long as the machine is stopped and when the act announced by the said card is finished the operator turns the switch member 75 to the position shown in dotted lines in Fig. 10 at which time the current flows through the conduit, 79, contact 71, conduit 80, contact 72, switch member 75, contact 74, conduit 81, contact 69, switch member 70, contact 67, conduit 77, thence through the motor and the line 78 to the source of current. This sets the device again in operation and again moves the carrier 24 upwardly which carries the rear card from the guideways 38 and deposits the same onto the rear of the guideways 37 at the same time removing the forward card from the guideways 37 and depositing the same on the guideways 38, thus exposing the succeeding card on the guideways 37 to view. As the carrier is moved to the extreme lowermost position the plunger 56 is again actuated which throws the switch member 70 to the position shown in full lines in Fig. 10 thus again breaking the circuit and stopping the machine. It can thus be seen that in the use of this device as a theatre annunciator it is only necessary for the operator to actuate the switch 64 at the beginning of each act, thereby exposing the card announcing the act to the view of the audience.

From the foregoing description it becomes evident that the device is easily operated, is very efficient in operation, occupies but small floor space and by this construction a device is provided which accomplishes the objects desired.

Having thus fully described my invention, its utility and mode of operation, what I claim and desire to secure by Letters Patent of the United States is—

1. In a device of the character described, a pair of upper guideways inclined toward the front of the machine, a pair of lower guideways inclined toward the rear of the machine, a pivoted extension on the rear ends of the upper guideways a series of card frames adapted to be carried upon the lower and upper guideways, a carrier adapted to carry one of the card frames from the lower guideways to the upper guideways, the construction being such that upon the card frame striking the pivoted extensions the same are turned upward to allow the card frame to pass thereby and upon downward movement of the card frame the same is engaged by the said extensions and directed onto the upper guideways.

2. In a device of the character described, a framework, a pair of upper and a pair of lower oppositely inclined guideways, the guideways of each set being in parallel relation, a pivoted latch on the upper ends of the upper set of guideways, a series of cards or mats supported on each set of guideways down which they are adapted to travel by gravity, each of said guideways being formed with an upwardly projecting portion at the lower end providing a stop for the supported cards, a transfer device reciprocably mounted in the framework, a series of catches pivotally mounted in the transfer device adapted to separate a single card from each set and deposit it on the guideways for the other set, a drive chain, a pitman pivotally connecting the chain and transfer device, and means for driving the chain.

3. In a device of the character described, a framework, a frame member supported on each side of the framework in spaced relation therewith, oppositely inclined guideways arranged in sets in parallel relation on the inner faces of the said frame members, a series of cards or mats supported in each set of parallel guideways down which they are adapted to travel by gravity, said guideways being formed with stops at the lower end to prevent the cards from passing off from the guideways and with pivoted catches in the upper end to allow the cards to be carried thereby, and a transfer device or carrier provided with end portions adapted to be reciprocated in the spaces between the frame members and frame work, the said carrier being ricprocably mounted in the framework and adapted to alternately transfer cards from the lower to the upper guideways and from the upper to the lower guideways.

4. In a device of the character described, the combination of display means for displaying a plurality of signs sequentially, said means including two series of display cards, one series being hidden from view and the other series exposing the front card thereof to view, a movable carrier member for transferring a card from one series to the other, an electric motor for operating the carrier, a switch operated by the car-

rier on completion of movement in one direction to cause cessation of operation of the motor, a manually operable switch for again energizing the motor through the first mentioned switch irrespective of its position, and a rheostat in the motor circuit for varying the time interval of movement of the carrier in transferring a card from one series to the other.

5. In a device of the character described, a series of card frames arranged in an upper and a lower bank and supported from the upper edges only, a carrier reciprocable at the rear of the card frames, and a pair of fingers on the said carrier preventing the card frames on the upper bank from swinging into the path of movement of the carrier.

6. In a device of the character described, a series of card frames each consisting of a channel member U-shaped in form, a rod secured to each upper end of the channel member and extending outwardly therefrom, the said card frames being arranged in an upper and a lower bank, a pair of guides for each bank supporting the said rod ends, a series of enlargements on each card frame spacing the frames in the banks and a carrier adapted to carry the card frames from one bank to the other sequentially.

7. In a device of the character described, a pair of upper guideways inclined toward the front of the machine, a pair of lower guideways inclined toward the rear of the machine, a pivoted extension on the rear of the upper guideways, a series of card frames each consisting of a U-shaped channel member, a rod secured to each upper end of the channel member and extending outwardly therefrom, the said rod ends being adapted to ride on the upper or lower guideways, each card frame being provided with protruding portions spacing the same on the guideways, and a carrier adapted to carry the card frames from one set of guideways to the other sequentially.

8. In a device of the character described, a plurality of card frames arranged in two banks, one bank being hidden from view and the other bank exposing a front card to view, means for moving a card from one of the banks to the other to expose the cards to view in sequence, an electric motor for operating the said means, a switch automatically actuated on completion of movement of each card for causing cessation of operation of the motor, and means operable at will for starting the motor.

In testimony whereof, I sign this specification.

ALBERT K. DAVIS.