July 3, 1956 W. J. THORSEN 2,752,781

APPARATUS FOR DETERMINING TEXTILE CHARACTERISTICS

Filed July 28, 1954

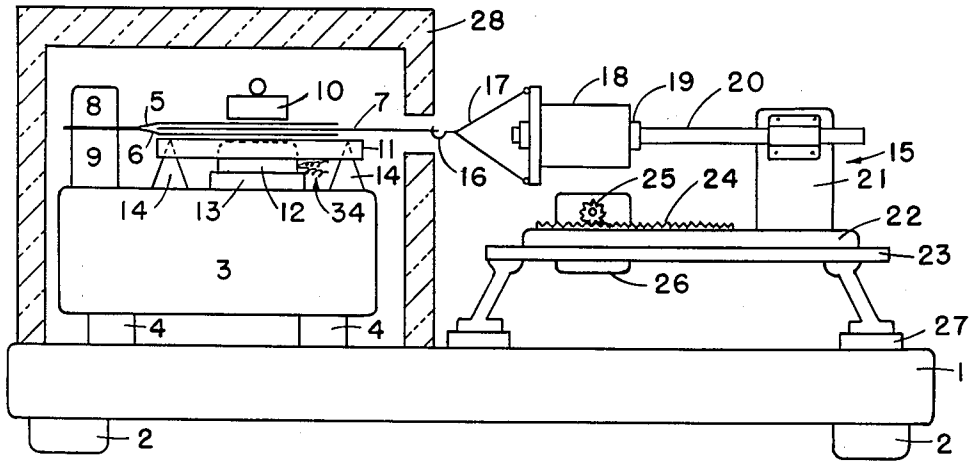

FIG. 1

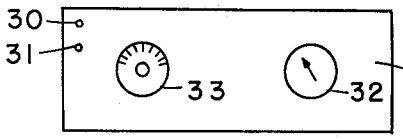

FIG. 2

W. J. THORSEN
INVENTOR

BY D. A. Seegist
W. Bier
ATTORNEYS

United States Patent Office

2,752,781

Patented July 3, 1956

2,752,781

APPARATUS FOR DETERMINING TEXTILE CHARACTERISTICS

Walter J. Thorsen, El Cerrito, Calif., assignor to United States of America as represented by the Secretary of Agriculture

Application July 28, 1954, Serial No. 446,425

6 Claims. (Cl. 73—159)

(Granted under Title 35, U. S. Code (1952), sec. 266)

A non-exclusive, irrevocable, royalty-free license in the invention herein described, for all governmental purposes, throughout the world, with the power to grant sublicenses for such purposes, is hereby granted to the Government of the United States of America.

This application is a continuation-in-part of my copending patent application, Serial No. 392,774, filed Nov. 17, 1953, and now abandoned.

This invention relates to apparatus for measuring the characteristics of textile materials such as woven or knitted cloth, felts, fibers, threads, filaments, etc. In particular, the invention is concerned with devices wherein measurement of the sound produced by rubbing samples of the textile material is utilized as an index of the characteristics of the material, for example, its hand, or various properties which may affect the hand, such as harshness or softness, fiber stiffness, resilience, compliance, flexural rigidity, and other factors important in the field of textile production and processing. Further objects and advantages of the invention will be obvious from the description herein.

In the preparation and processing of textile materials it is important to know the characteristics of the materials so that one can be assured that they will serve their intended purposes. An important factor in many applications of textiles is the hand of the fabric. The hand, or handle as it is sometimes called, is dependent on a multitude of inter-related factors based on the characteristics of both the fiber itself and the fabric geometry. The fiber characteristics which affect the hand include fiber diameter, bending modulus, surface friction (harshness or softness), chemical composition, crimp, etc. The fabric characteristics which affect the hand include surface smoothness, bending modulus, resilience, compliance, flexural rigidity compressional modulus, hardness, weight, thickness, density, type of weave, etc. In general, it has not proved satisfactory to measure the individual characteristics and commonly the hand of a particular fabric is estimated by feeling and manipulation. The hand of the material is usually rated in qualitative terms such as soft, silky, crisp, harsh, boardy, stiff, etc. Although the human hand is capable of detecting small differences in fabric or fiber quality, subjective factors are involved and it is impossible to set up universally accepted standards of fabric quality on this basis of tests by feeling. The device of this invention eliminates the "human factor" and provides a truly objective system for measuring fabric quality. The device is easily constructed, calibrated and standardized making possible reproducible, standard measurement of the hand of fabrics.

The invention is based on the fact that when pieces of textile material are rubbed against one another they produce distinct sounds—these sounds being related to the characteristics of the material. By measuring the intensity or analyzing these sounds one can determine the

characteristics of the textile rapidly and accurately. Suitable apparatus for carrying out the invention comprises a means for rubbing the textile specimens against one another, an instrument, such as a microphone to pick up the sound and convert it into an electrical signal and electronic means for measuring the electrical signal or analyzing its spectrum. This electronic equipment is preferably a harmonic wave analyzer (also known as a frequency-selective voltmeter). The sound produced and the electrical signal corresponding thereto is not composed of a single frequency but covers a wide frequency range, the amplitude at each frequency being different. By use of the harmonic wave analyzer, one can select narrow bands of frequency and measure the intensity of the signal in each band of frequency. The resulting data of intensity at different frequencies furnish an accurate index as to the character of the material under test. In general, it has been observed that lower intensities of sound are indicative of better quality or hand.

It is a particular feature of this invention that gross surface irregularities of the textile material under test do not interfere with the determination of the intrinsic character of the material such as its hand. This is accomplished by rubbing the samples of material against one another at such a relative velocity that the vibrations due to gross surface irregularities (type of weave, threads per inch, etc.) are of such a low frequency that they are in the inaudible range (less than about 30 C. P. S.). Being inaudible, these vibrations do not interfere with the audible vibrations of higher frequency produced by the rubbing action which depend on such factors as the physical state and chemical composition of the fibers that make up the fabric. In general the textile samples are rubbed against one another at a relative velocity from about 0.5 inch to about 10 inches per minute. The significance of this aspect of the invention can be demonstrated by the following example. If two samples of cloth having, say 100 threads per inch, are rubbed against one another at a relative velocity of about ½ inch per second or higher the sound produced will be mainly due to the intermittent contact of the individual threads of one piece of material with the threads in the other piece. This sound will be so intense as to completely drown out the sounds derived not from gross construction differences but from the more refined differences such as physical state and chemical composition of the fibers. Under such conditions of rubbing the sound would be of no value to determine the hand of the fabric, for example a closely woven but boardy material would give less sound than a soft but loosely woven fabric. On the other hand at the relatively low rubbing velocities used in accordance with this invention no audible sounds are produced by such gross constructional aspects as threads per inch, etc. but the sound actually produced is indicative of the more refined aspects which determine the hand of the fabric.

As noted hereinabove the sound produced by rubbing the textile material is not composed of a single frequency but includes components of different amplitudes at different frequencies. By the use of a harmonic wave analyzer or similar device these components can be separately measured thus to provide a spectrum of the sound produced. This technique has the advantage that even if part of the sound produced is derived from the gross surface irregularities of the textile, this portion of the sound can be separated with the wave analyzer and thus its presence in the total sound will not vitiate the analysis. Thus for example if the samples of textile materials are rubbed at such a high velocity as to generate say a sound component of 100 C. P. S. caused by the interaction of the

gross surface irregularities of the textile, this 100 C. P. S. component will not interfere with the determination because when the total sound is analyzed on the basis of amplitude at different frequencies it will be found that the sound components indicative of the hand of the textile are generally in the range of about 400 to 1500 C. P. S. and thus far removed from the 100 C. P. S. component due to the gross surface irregularities. For this reason when the sound produced is subjected to analysis of amplitude at different frequencies, the velocity at which the samples are rubbed can be increased if desired up to such a velocity that the sound component due to gross surface irregularities has a frequency up to about 200 cycles per second without causing interference with the determination. Usually however no advantage is gained by increasing the velocity of rubbing and the above-defined limits of velocity (about ½ to 10 in. per minute) are generally preferred as providing more time in which to adjust the circuits and perform other necessary operations.

It is also of interest to note that the velocity at which the rubbing is conducted influences the frequency only of the sound (or inaudible vibration) caused by interaction of gross surface irregularities but does not influence the frequency of the sound generated by the intrinsic textile characteristics. Thus if the samples of material are rubbed at decreasing velocities the vibrations due to the interaction of the gross surface irregularities will decrease in frequency in direct proportion to the velocity. This factor makes it possible to completely eliminate this source of vibrations by using a low rubbing velocity. On the other hand the frequency of the sound generated by the intrinsic character of the textile being indicative of the hand of the material does not significantly change with the rubbing velocity. Thus when a low rubbing velocity is used to eliminate any components of vibration caused by gross surface irregularities, there is no material change in the frequency responses due to the intrinsic character of the textile.

Reference is now made to the attached drawing which illustrates apparatus and test data within the scope of this invention. In the drawing:

Fig. 1 is a side elevation partly in cross-section of a preferred form of the testing device.

Fig. 2 shows plots of sound intensity versus frequency of two samples of cloth when tested on the device of Fig. 1.

Referring now to Fig. 1, the construction and operation of the apparatus is explained as follows:

Concrete block 1, supported on rubber blocks 2 provides a solid foundation for the device and minimizes transmission of noises from the table or other support for the device. A massive block of metal 3 provides a support for the material under test and the microphone—this block 3 rests on rubber blocks 4 to minimize transmission of noise. The apparatus utilizes three samples, 5, 6, and 7, of the material under test for producing the noise to be measured. These samples are placed one on top of the other in sandwich fashion. In the drawing these samples are shown separated from one another only for clarity of representation—obviously in practice the samples are pressed flat against one another on diaphragm 11 by the action of weight 10. Samples 5 and 6 are maintained stationary during the test as their ends are pinched between metallic blocks 8 and 9. Middle sample 7 is pulled to the right during the test. A weight 10 is provided to exert a constant force on the samples, thus a constant noise level is produced during the drawing. Since sample 5 does not move there is no tendency for weight 10 to move and it remains in the position shown during the test. Beneath sample 6 is diaphragm 11 supported on rubber blocks 14—this diaphragm is made of thin cardboard or other light weight material in the form of an inverted rectangular pan. A contact microphone 12 is attached to the under surface of diaphragm 11 and sound-absorbtive material 13 is placed beneath it. Cotton wool or the like may be placed about the microphone to eliminate picking up of extraneous noises.

The draft apparatus generally designated as 15 comprises hook 16 attached to sample 7 and cords 17 connecting the hook to collar 18. Collar 18 is positioned on rod 20 but acoustically insulated therefrom by rubber bushings 19. Rod 20 is attached to bracket 21 which in turn is attached to table 22. Table 22 is adapted to slide to the left or right in tracks on bed 23. On the upper surface of table 22 is provided rack 24 which cooperates with pinion 25. Pinion 25 is driven by motor 26 attached to bed 23. Motor 26 is preferably a geared, reversible type and by its rotation and subsequent transmission of motion to rack 24, sample 7 is drawn between samples 5 and 6 at the rate of about 40 mm. per minute. Rubber blocks 27 are provided for minimizing transmission of motor noise to the microphone. Box 28 made of a sound-absorbing material serves to minimize the possibility of atmospheric noises reaching the microphone.

Harmonic wave analyzer 29 of conventional construction is provided for measuring the signal produced by microphone 12. Terminals 30, 31 are adapted for connection to the microphone output leads 34. Meter 32 (a millivoltmeter, for example) provides the means for measuring intensity at the frequency band selected by adjustment of tuning knob 33.

To operate the device, three samples of the material are placed as shown in Fig. 1. The upper and lower sample are pinched between blocks 8 and 9, the middle sample is then connected to hook 16. The draft apparatus 15 is then actuated so as to draw the middle sample to the right. The rubbing of the samples produces a steady sound which is picked up by microphone 12 and converted into an electrical signal. This signal is then fed into analyzer 29. By adjusting knob 33 to tune the instrument to various frequencies and noting the intensity at each frequency, a plot of intensity vs. frequency may be obtained which constitutes a sound spectrum of the material in question. In using the device to test the quality of fibers it is necessary to form the fibers into pads so they can be treated like cloth samples. The pads may be formed by pressing a mass of fibers between rollers or compressing them in a hydraulic press or similar device.

The following examples illustrate the invention in greater detail:

Example I

Samples of woolen flannel were tested in the device as described above. In each case the middle cloth specimen (7 in Fig. 1) was drawn at a speed of 40 mm. per min. and the pressure exerted on the samples by weight 10 was 2.1×10^4 dynes per sq. cm.

One of the samples of cloth was the untreated woolen flannel, the other was the same woolen flannel modified by immersing it in an acetone solution of beta-propiolactone polymer then evaporating the acetone solvent from the sample.

The output of microphone 12 was analyzed with the harmonic wave analyzer to determine the intensity of the signal at different frequencies. The results are depicted in Fig. 2 wherein curve 35 represents the results for the untreated sample and curve 36 the results for the treated sample. The graphs show that the intensity of sound was greater with the treated cloth than with the untreated cloth. This correlated with sensory tests which indicated that the treated cloth was harsher than the untreated cloth.

Example II

Samples of woolen cloth were immersed for varying periods of time in alcoholic potassium hydroxide solution (1%), then dried. The samples were tested with the apparatus explained above. In addition the samples were subjected to sensory (feeling) tests by a group of 11 people to judge their relative harshness. The samples were rated on a basis of 0 for complete softness to 100 for extreme harshness. The results obtained are tabulated below:

Time of alkali treatment, min.	Intensity of signal at 450 C. P. S., in millivolts	Intensity of signal expressed as percent	Harshness by sensory tests
0 (control)	18.3	0	0
1	20.7	68	63
12	21.8	100	100

Example III

Samples of woolen gabardine differing only in fiber diameter were obtained. The samples were tested with the apparatus described above. In addition, the samples were subjected to sensory (feeling) tests by a group of 12 persons to judge their relative qualities. The samples were rated on a basis of zero for complete softness to 100 for extreme harshness. The results obtained are tabulated below:

Type of wool	Australian fine	Domestic fine	Domestic medium	New Zealand medium
Average diameter of fiber, microns	19.7	21.67	25.85	26.5
Diameter expressed in percent	0	29.0	20.4	100
Intensity of signal at 450 C. P. S. in millivolts	20	22.85	29.1	29.5
Intensity of signal expressed in percent	0	31.6	95.8	100
Harshness by sensory tests	0	36.2	98.7	100

Having thus described the invention, what is claimed is:

1. An apparatus for determining the characteristics of a textile material which comprises means for rubbing a sample of the material at a velocity in the range at which sound is produced by said rubbing action but below the velocity at which vibrations of audible frequency are produced by the gross surface irregularities of the material, an instrument adjacent said sample for converting the sound produced into a measurable signal, and means for measuring the signal produced.

2. An apparatus for determining the textile characteristics of a textile material which comprises means for rubbing a sample of the material at a velocity in the range at which sound is produced by said rubbing action, said velocity being so limited that vibrations caused by interaction of gross surface irregularities of the material have a frequency less than about 200 cycles per second, an instrument adjacent said sample for converting the sound produced into a measurable signal, and means for measuring the signal produced.

3. An apparatus for determining the characteristics of a textile material which comprises means for rubbing samples of the material together at a relative velocity from about 0.5 inch per minute to about 10 inches per minute, an instrument adjacent said samples for converting the sound produced into an electrical signal, and means for measuring the intensity of this signal.

4. An apparatus for determining the characteristics of a textile material which comprises means for rubbing samples of the material together, an instrument adjacent said samples for converting the sound produced into an electrical signal, and means for measuring the intensity of the signal at various frequencies to determine the sound spectrum.

5. An apparatus for determining the characteristics of textile materials which comprises means for holding stationary a first sample of textile material, means for drawing a second sample of textile material against said first sample, an instrument adjacent said samples for converting the sound produced into an electrical signal, and means for measuring the electrical signal.

6. An apparatus for determining the characteristics of textile materials which comprises means for positioning two samples of the textile material in contact with one another, means for drawing one of said samples against the other, means for exerting a constant pressure on the samples as the drawing takes place, an instrument adjacent said samples for converting the sound produced into an electrical signal, and means for measuring the intensity of the electrical signal.

References Cited in the file of this patent

UNITED STATES PATENTS

1,981,693	Firestone et al.	Nov. 20, 1934
2,299,722	Burns et al.	Oct. 27, 1942
2,633,741	Sanders	Apr. 7, 1953

FOREIGN PATENTS

645,132	Germany	May 21, 1937