(12) STANDARD PATENT (11) Application No. **AU 2011317389 B2**
(19) AUSTRALIAN PATENT OFFICE

(54) Title
Apparatus and methods for restricting flow in a bore

(51) International Patent Classification(s)
E21B 33/06 (2006.01)

(21) Application No: **2011317389** (22) Date of Filing: **2011.10.20**

(87) WIPO No: **WO12/052721**

(30) Priority Data

(31) Number	(32) Date	(33) Country
1017914.1	**2010.10.22**	**GB**

(43) Publication Date: **2012.04.26**
(44) Accepted Journal Date: **2016.02.25**

(71) Applicant(s)
Weatherford Technology Holdings, LLC

(72) Inventor(s)
Ford, Daniel;Fogg, James

(74) Agent / Attorney
Marks & Clerk Australia, L 6 287 Collins Street, MELBOURNE, VIC, 3000

(56) Related Art
US 4809733

(12) INTERNATIONAL APPLICATION PUBLISHED UNDER THE PATENT COOPERATION TREATY (PCT)

(19) World Intellectual Property Organization
International Bureau

(43) International Publication Date
26 April 2012 (26.04.2012)

PCT

(10) International Publication Number
WO 2012/052721 A2

(51) International Patent Classification: Not classified

(21) International Application Number:
PCT/GB2011/001508

(22) International Filing Date:
20 October 2011 (20.10.2011)

(25) Filing Language: English

(26) Publication Language: English

(30) Priority Data:
1017914.1 22 October 2010 (22.10.2010) GB

(71) Applicant *(for all designated States except US)*: **WEATHERFORD/LAMB INC.** [US/US]; 515 Post Oak Boulevard, Suite 600, Houston, TX 77027 (US).

(72) Inventors; and

(75) Inventors/Applicants *(for US only)*: **FORD, Daniel** [GB/GB]; 16 Bewick Close, Bradwell, Great Yarmouth, Norfolk NR31 9UJ (GB). **FOGG, James** [GB/GB]; 39 El Alamein Way, Bradwell Gt Yarmouth, Norfolk, NR31 8SX (GB).

(74) Agent: **SHANKS, Andrew**; Marks & Clerk LLP, Aurora, 120 Bothwell Street, Glasgow G2 7JS (GB).

(81) Designated States *(unless otherwise indicated, for every kind of national protection available)*: AE, AG, AL, AM, AO, AT, AU, AZ, BA, BB, BG, BH, BR, BW, BY, BZ, CA, CH, CL, CN, CO, CR, CU, CZ, DE, DK, DM, DO, DZ, EC, EE, EG, ES, FI, GB, GD, GE, GH, GM, GT, HN, HR, HU, ID, IL, IN, IS, JP, KE, KG, KM, KN, KP, KR, KZ, LA, LC, LK, LR, LS, LT, LU, LY, MA, MD, ME, MG, MK, MN, MW, MX, MY, MZ, NA, NG, NI, NO, NZ, OM, PE, PG, PH, PL, PT, QA, RO, RS, RU, RW, SC, SD, SE, SG, SK, SL, SM, ST, SV, SY, TH, TJ, TM, TN, TR, TT, TZ, UA, UG, US, UZ, VC, VN, ZA, ZM, ZW.

(84) Designated States *(unless otherwise indicated, for every kind of regional protection available)*: ARIPO (BW, GH, GM, KE, LR, LS, MW, MZ, NA, RW, SD, SL, SZ, TZ, UG, ZM, ZW), Eurasian (AM, AZ, BY, KG, KZ, MD, RU, TJ, TM), European (AL, AT, BE, BG, CH, CY, CZ, DE, DK, EE, ES, FI, FR, GB, GR, HR, HU, IE, IS, IT, LT, LU, LV, MC, MK, MT, NL, NO, PL, PT, RO, RS, SE, SI, SK, SM, TR), OAPI (BF, BJ, CF, CG, CI, CM, GA, GN, GQ, GW, ML, MR, NE, SN, TD, TG).

Published:

— *without international search report and to be republished upon receipt of that report (Rule 48.2(g))*

(54) **Title**: APPARATUS AND METHODS FOR RESTRICTING FLOW IN A BORE

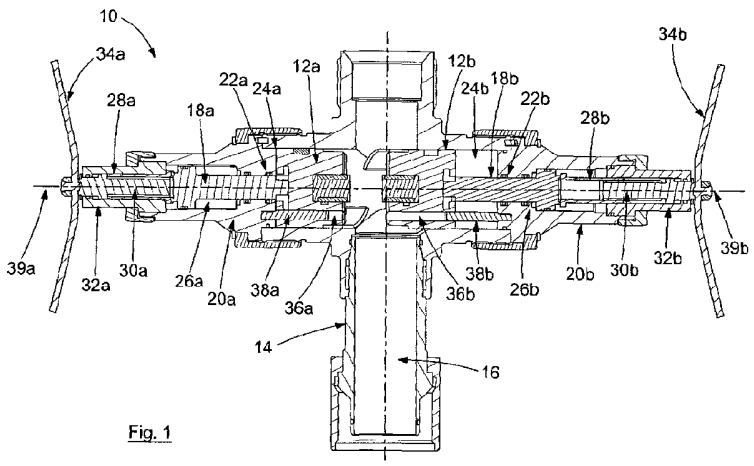

Fig. 1

(57) **Abstract**: Apparatus (10) for restricting a flow of fluid through a bore (14) comprises a bore sealing member (12a) and an actuation assembly for moving the bore sealing member (12a) between first and second configurations. The actuation assembly is configured to isolate first and second end portions (46, 48) of the activation member (12a) from a bore fluid (50). The apparatus (10) provides for moving the bore sealing member (12a) between the first and second configurations without a bore fluid (50) pressure acting on an end portion (46, 48) of the activation member (12a).

WO 2012/052721 A2

2011317389 20 Jan 2016

APPARATUS AND METHODS FOR RESTRICTING FLOW IN A BORE

FIELD OF THE INVENTION

The invention relates to a wellbore valve and in particular, but not exclusively, to a wireline valve for sealing a wellbore. The invention also relates to methods of sealing a wellbore.

BACKGROUND OF THE INVENTION

Wellbores for accessing oil and gas reserves are typically provided with one or more valves or pairs of valves for restricting the wellbore. These valves are used to resist the flow of fluids in the bore and may ultimately be used to close the wellbore, such as BOPs. The valves are used to prevent undesirable exposure of pressurised fluids during the drilling or operation of a well. For example, in a downhole intervention operation, wireline valves allow the well operator to insert and remove tools deployed on coiled tubing or wireline within a wellbore while maintaining pressure in the well.

Wireline valves are intended to stop the flow of a fluid through a tubular or to seal an annular space between two tubulars. Different types of wireline valves, such as annular or blind, are available. For example, blind valves crush or shear tubulars then seal the wellbore.

The valve often comprises a pair of seals that are pressed against each other to prevent fluid flowing through the bore. A valve sometimes has a cutter for shearing equipment such as piping or wireline that may be located in the bore to allow the valve to close to seal off the wellbore.

Wireline valves generally require movement of parts into a pressurised fluid in the wellbore. The valves are usually hydraulically activated, although some valves are mechanically activated.

In order to seal the bore, valve actuators must move parts that are exposed to the wellbore fluid pressure. Fluid pressure in wells can easily exceed 50 MPa and the resultant forces on parts of the valve are typically several tons.

SUMMARY OF THE INVENTION

According to an aspect of the invention there is provided an apparatus for restricting a flow of fluid through a bore, the apparatus comprising:

a bore sealing member; and

2011317389 20 Jan 2016

an actuation assembly for moving the bore sealing member between a first configuration corresponding to a bore open configuration and a second configuration corresponding to a bore closed configuration, the actuation assembly comprising an activation member with a first end portion and a second end portion, wherein the actuation assembly is configured to isolate the first and second end portions of the activation member from a bore fluid; and

wherein the apparatus is configured to displace substantially the same volume of fluid in the bore in the first configuration and in the second configuration.

Isolating the first end portion and the second end portion of the activation member from a bore fluid enables the activation member to move between a first position corresponding to the first configuration and a second position corresponding the second configuration, without pressure associated with a bore fluid acting on an end portion of the activation member; such as to resist movement of the activation member between the first position and the second position.

The first configuration may be a wellbore open configuration.

The second configuration may be a wellbore closed configuration.

The apparatus may be configured to displace substantially the same volume of fluid in the first configuration and in the second configuration. The total volume of fluid displaced by the apparatus may be the same in the first configuration and in the second configuration. The displaced volume of fluid may be a static volume of fluid. Movement of the apparatus between the first and second configurations may not affect the displaced volume of fluid. Maintaining the same volume of fluid displaced by the apparatus in the first configuration and in the second configuration ensures that force is not required to displace additional fluid when the apparatus is moved between the first and second configurations.

Alternatively, the apparatus may be configured to displace a different volume of fluid in the second configuration than in the first configuration. For example, the apparatus may be configured to displace a greater volume of fluid in the second configuration. Displacing a greater volume of fluid in the second configuration may bias the apparatus towards the first configuration. Alternatively, the apparatus may be configured to displace a greater volume of fluid in the first configuration; for example to bias the apparatus towards the second configuration.

The apparatus may be biased towards the first configuration. Alternatively, the apparatus may be biased towards the second configuration.

2011317389 20 Jan 2016

The apparatus may be configured to occupy substantially the same volume within a wellbore fluid envelope in the first configuration and in the second configuration.

The first end portion of the activation member may be configured to be proximal to the bore in the first configuration and the second end portion of the activation member may be configured to be distal to the bore in the first configuration.

The actuation assembly may be configured to move the activation member in a direction substantially perpendicular to the bore.

The actuation assembly may further comprise an isolator comprising a first side configured for receiving the first end portion of the activation member. The actuation assembly may be configured to define an isolation chamber between the first end portion of the activation member and a portion of the isolator.

The actuation assembly may be configured to separate the isolator first side from the bore fluid and to position an isolator second side in fluid communication with the bore fluid. The isolator may be configured to form a boundary between a first portion of the apparatus and a second portion of the apparatus, the first portion of the apparatus configured to be exposed to wellbore fluid pressure and the second portion of the apparatus configured to be exposed to a second fluid pressure. The second fluid pressure may be lower than the wellbore fluid pressure, for example the second fluid pressure may be atmospheric.

The actuation assembly may further comprise a first end portion seal, the first end portion seal configured to prevent the first end portion contacting the bore fluid. For example, to prevent bore fluid entering the isolation chamber.

The first end portion seal may be an annular seal between the activation member and the isolator.

The first end portion and the second end portion of the activation member may be configured to be in fluid communication. For example, the first end portion of the activation member may be linked to the second end portion of the activation member via a fluid passage, such as a conduit. Alternatively, the first end portion and the second end portion may be isolated such that the first end portion and second end portions may be subjected to different fluid pressures.

The isolator may be configured to accommodate a stroke of the activation member. For example, the isolator may be a cylinder.

The activation member may be a piston.

2011317389 20 Jan 2016

The isolator may be configured to maintain substantially the same position relative to the bore during movement of the activation member from the first position to the second position. For example the isolator may be fixed.

The activation member may further comprise a bore sealing member interface. The bore sealing member interface may be located between the first end portion and the second end portion of the activation member.

The activation member may comprise a central portion located between the first and second end portions. The central portion may be configured to be in fluid communication with the bore fluid. Alternatively, the central portion may be configured to be isolated from the bore fluid.

The actuation assembly may further comprise an activation member housing configured for receiving the central portion.

The isolator may be attached to the activation member housing. For example, the activation member housing may comprise the isolator.

The isolator may be configured to control the bore fluid pressure acting axially on the activation member.

The activation member housing may comprise a first portion and a second portion, the first portion configured to be in fluid communication with the bore fluid and the second portion configured to be isolated from the bore fluid.

The actuation assembly may further comprise a proximal chamber, the proximal chamber located between the isolator and the activation member housing. The actuation assembly may be configured to enable fluid communication between the proximal chamber and the bore. Additionally or alternatively, the actuation assembly may be configured to isolate the proximal chamber from fluid in the bore.

The actuation assembly may further comprise an intermediate chamber. The intermediate chamber may be separated from the proximal chamber by the activation member housing. The intermediate chamber may be located between the proximal chamber and the second end portion of the activation member.

The actuation assembly may further comprise a second end portion seal. The second end portion seal may be configured to prevent the second end portion contacting the bore fluid. For example, the intermediate chamber may be fluidly isolated from the proximal chamber.

The first end portion seal may be configured to seal a first cross-sectional area of the activation member perpendicular to the direction of extension. The second end portion seal may be configured to seal a second cross-sectional area of the activation member perpendicular to the direction of extension. The first and the second cross-

2011317389 20 Jan 2016

sectional areas may be substantially the same. Alternatively, the second cross-sectional area may be greater than the first cross-sectional area. For example, the second end portion seal may comprise an opening for receiving a larger activation member diameter than an opening of the first end portion seal. Alternatively, the first cross-sectional area may be greater than the second cross-sectional area.

The first and second cross-sectional areas may be selected according to a wellbore fluid characteristic/s and/or a wellbore characteristic/s and/or a desired force/s required to move the bore sealing member between the first and second configurations. For example, where the second end portion seal diameter is greater than a first end portion seal diameter, the difference between the diameters may be less for a larger fluid pressure.

The second end portion seal may be an annular seal between the central portion and the activation member housing.

The activation member may be configured to move axially within the activation member housing.

The actuation assembly may further comprise an activation member housing seal between the intermediate chamber and the proximal chamber.

The actuation assembly may be housed in an actuation assembly casing. The activation member housing seal may be located between the activation member housing and the casing.

The intermediate chamber may be in fluid communication with the isolation chamber. For example, the second intermediate chamber may be connected to the isolation chamber via a fluid conduit.

The isolation chamber may be in atmospheric fluid communication. For example, the isolation chamber may be fluidly connected, such as via a venting conduit, to outside of the apparatus. The activation member may comprise at least a portion of the venting conduit. For example, the activation member may comprise an axial passage.

The actuation assembly may further comprise a distal chamber. The distal chamber may be located between the intermediate chamber and the second end portion.

The apparatus may be configured to be hydraulically activated. For example, the distal chamber may be may be an activation chamber configured to be in fluid communication with a hydraulic source. Additionally, or alternatively, the apparatus may comprise a mechanical actuator. For example, the distal chamber may comprise a

2011317389 20 Jan 2016

first threaded member. The first threaded member may be configured to receive a second threaded member.

The mechanical actuator may be configured to maintain the bore sealing member in the second configuration. For example, the mechanical actuator may be a manual lock.

The first threaded member may be configured to be located at a fixed distance from the bore. The first threaded member may be configured to rotate about a rotation axis substantially perpendicular to the bore.

Axial movement of the first threaded member with respect to the second threaded member may be restricted, such that rotational movement of the first threaded member with respect to the second threaded member results in axial movement of the first threaded member with respect to the second threaded member.

The second threaded member may be configured to move the activation member. For example a proximal end portion of the second threaded member may contact a portion of the activation member proximal to the second end portion of the activation member.

The apparatus may be configured to define the rotational movement of the activation member about an axis parallel to the direction of extension of the activation member. The actuation assembly may be configured to prevent rotation of the activation member about the axis parallel to the direction of extension of the activation member. For example, the activation member may comprise a linear element. The linear element may be a slot. Additionally, or alternatively the linear element may be a radial protrusion.

The bore sealing member interface may be configured to connect the central portion to a bore sealing member support.

The bore sealing member support may be configured to move coaxially with the activation member. The bore sealing member support may be configured to move simultaneously with the activation member.

The bore sealing member interface may be configured to restrict movement of the bore sealing member support relative to the activation member. For example, the bore sealing member interface may be configured to restrict rotation of the bore sealing member support. Additionally, or alternatively, the bore sealing member interface.

At least a portion of the bore sealing member support may be configured to substantially surround the isolator. For example, the bore sealing member support may be a sleeve.

2011317389 20 Jan 2016

The bore sealing member support may be configured to define the rotational movement of the bore seal about the axis parallel to the direction of extension of the activation member. The bore sealing member support may be configured to prevent rotation of the bore seal about an axis parallel to the direction of extension of the activation member. For example, the bore sealing member may comprise a profiled portion, the profiled portion configured to restrict circumferential movement of the bore sealing member.

The apparatus may further comprise a locking member. The locking member may be configured to maintain the bore sealing member in the second configuration. For example, the locking member may be configured to engage the activation member in the second position such that axial movement of the activation member is restricted.

The apparatus may comprise a wireline valve.

The apparatus may comprise a BOP.

The apparatus may comprise a gate valve.

The apparatus may be configured to expose only an intermediate portion of the activation member to the bore fluid pressure, the intermediate portion located between the first and second end portions.

According to an aspect of the invention there is provided a method of restricting fluid flow in a bore, the method comprising:

moving a bore sealing member from a first configuration to a second configuration by moving an activation member from a first position to a second position, the activation member comprising a first end portion and a second end portion, wherein the activation member is moved from the first position to the second position with the first end portion and the second end portion isolated from a bore fluid; and the apparatus displaces substantially the same volume of fluid in the bore in the first configuration and in the second configuration.

According to an aspect of the invention, there is provided an apparatus for restricting a flow of fluid through a bore, the apparatus comprising

a bore sealing member; and

an actuation assembly;

wherein the bore sealing member is connected to the actuation assembly by a profiled head, the profiled head being rotationally asymmetrical about a central longitudinal axis of the bore sealing member.

Providing such a profiled head prevents rotation of the bore sealing member about its longitudinal axis such that an orientation of the bore sealing member may be maintained, such as an upright orientation relative to a wellbore.

2011317389 20 Jan 2016

The invention includes one or more corresponding aspects, embodiments or features in isolation or in various combinations whether or not specifically stated (including claimed) in that combination or in isolation. For example, it will readily be appreciated that features recited as optional with respect to one aspect may be additionally applicable with respect to any of the other aspects, without the need to explicitly and unnecessarily list those various combinations and permutations here.

The above summary is intended to be merely exemplary and non-limiting.

BRIEF DESCRIPTION OF THE DRAWINGS

Embodiments of the present invention will now be described, by way of example, with reference to the accompanying drawings, in which:

Figure 1 is a sectional view of an existing wireline valve;

Figure 2 is a sectional view of a part of a wireline valve in accordance with an embodiment of the present invention, the sectional view corresponding to line B-B of Figure 5;

Figure 3 is a sectional view of the part of a wireline valve of Figure 2 showing the wireline valve in a first open configuration;

Figure 4 is a sectional view of the part of a wireline valve of Figure 2 showing the wireline valve in a first closed configuration; and

Figure 5 is a sectional view of the part of a wireline valve of Figure 2 showing the wireline valve in a second closed configuration.

DETAILED DESCRIPTION OF THE DRAWINGS

Reference is first made to Figure 1 of the drawings, which is a sectional view of a conventional wireline valve, such as supplied by the applicant. The wireline valve 10 shown is a ram wireline valve comprising a pair of sealing heads 12a, 12b for sealing a wellbore 14 to restrict the passage of fluid 16 through the wellbore. The wireline valve 10 is shown in a partially closed configuration, with a first sealing head 12a in an open position and a second sealing head 12b in a closed position. Each sealing head 12a, 12b is attached to an activation rod 18a, 18b. A first activation rod 18a is shown in a retracted position, with the first sealing head 12a located proximal to a first rod housing 20a; whilst a second activation rod 18b is shown in an extended position, with the second sealing head 12b distal to a second rod housing 20b.

Annular activation rod seals 22a, 22b are located between the respective first and second activation rods 18a, 18b and their respective rod housing 20a, 20b. The annular activation rod seals 22a, 22b isolate sealing head chambers 24a, 24b from rod

2011317389 20 Jan 2016

housing chambers 26a, 26b such that the sealing head chambers 24a, 24b are in fluid communication with the wellbore fluid 16 whilst the rod housing chambers 26a, 26b are isolated from the wellbore fluid 16 and therefore not subject to a wellbore fluid 16 pressure.

Each activation rod 18a, 18b is attached to a respective threaded sleeve 28a, 28b, which in turn is connected to a respective screw 30a, 30b. Each screw 30a, 30b is housed in a screw casing 32a, 32b such that the axial position of each screw 30a, 30b is fixed with respect to the bore 14. Each screw 30a, 30b is operable by a handle 34a, 34b such that each screw 30a, 30b rotates in the screw casing 32a, 32b. The screwthread interface between each screw 30a, 30b and the respective threaded sleeve 28a, 28b and a rotational restriction on each sleeve 28a, 28b results in axial movement of each sleeve 28a, 28b when the respective screw 30a, 30b is rotated. Axial movement of each sleeve 28a, 28b results in axial movement of the respective sealing head 12a, 12b such that the wellbore 14 can effectively be selectively opened or closed to the passage of fluid 16 through the wellbore 14.

Movement of an open sealing head 12a to the position of a closed sealing head 12b requires the displacement of a volume of fluid 16 in the wellbore corresponding to the additional volume of the rod 18a, 18b that enters the respective sealing head chamber 24a, 24b. The displacement of fluid 16 under wellbore pressure requires work. The pressure of the wellbore fluid 16 acting on the cross-sectional area of the rod 18a, 18b perpendicular to the direction of extension requires a force, which may be several tons depending on the particular wellbore pressure and the diameter of the rod 18a, 18b.

Each sealing head 12a, 12b comprises an aperture 36a, 36b for receiving a pin 38a, 38b; each pin 38a, 38b attached to the respective rod housing 20a, 20b. Each aperture 36a, 36b and corresponding pin 38a, 38b is offset from a central axis of extension 39a, 39b of each activation member 18a, 18b such that rotation of each sealing head 12a, 12b about each axis of extension 39a, 39b is prevented.

Reference is now made to Figures 2, 3, 4 and 5 of the drawings, which illustrate a part of a wireline valve 40 in accordance with an embodiment of the present invention. As will be described, the wireline valve 40 is configured to be moved between an open configuration and a closed configuration in a wellbore 42 by an activation stem 44 with an activation stem first end portion 46 and an activation stem second end portion 48 isolated from a bore fluid 50, such that a wellbore fluid 50 pressure does not act against the movement between the first and second configurations.

2011317389 20 Jan 2016

The illustrated wireline valve 40 comprises a sealing head 52 attached to a seal sleeve 54. The seal sleeve 54 is cylindrical and comprises a first and a second profiled portion 56a, 56b as can best be seen in Figure 2. The two profiled portions 56a, 56b abut corresponding first and second sealing head profiled portions 58a, 58b. In the embodiment shown the profiled portion 56a, 56b is a flat portion. The profiled portions 56a, 56b, 58a, 58b ensure that the sealing head 52 cannot rotate relative to the seal sleeve 54, about a longitudinal axis 60.

The seal sleeve 54 is connected to the activation stem 44 by a set of keys 62a. The wireline valve 40 is configured to locate the seal sleeve 54 fully in the wellbore fluid 50 such that no static fluid pressure difference acts across the seal sleeve. The set of keys 62a are attached to the activation stem 44 at a central portion 64. In the embodiment shown the keys 62a have axial apertures, allowing the passage of fluid in a proximal chamber 66 that houses the seal sleeve 54.

In the embodiment shown, the central portion 64 comprises a shoulder joining two cylindrical portions of activation stem 44 of different diameters.

The activation stem 44 is received in a cylinder 68, with a cylinder seal 70 separating a cylinder chamber 72 from the proximal chamber 66 such that the cylinder chamber 72 is isolated from the wellbore fluid 50 pressure. The activation stem first end portion 46 is located in the proximal chamber 66 in the open configuration as shown in Figure 3 and also located in the proximal chamber 66 in the closed configurations of Figures 4 and 5. The activation stem first end portion 46 is thus always separated from the wellbore fluid 50 by the cylinder seal 70 such that the activation stem first end portion 46 is never exposed to the wellbore fluid 50 pressure.

The cylinder 68 is connected to an activation stem housing 74 via supports comprising axial slots 76 to allow the passage of the keys 62a from the first configuration of Figure 3 to the second configurations of Figures 4 and 5. The activation stem housing 74 comprises an activation stem seal 78 separating an intermediate chamber 80 from the proximal chamber 66 such that the intermediate chamber 80 is isolated from the wellbore fluid 50 pressure. The activation stem second end portion 48 is also separated from the proximal chamber 66 by the activation stem seal 78, such that the activation stem second end portion 48 is isolated from the wellbore fluid 50 pressure. The activation stem second end portion 48 is thus always separated from the wellbore fluid 50 by the activation stem seal 78 such that the activation stem second end portion 48 is never exposed to the wellbore fluid 50 pressure, either in the positions of the open configuration as shown in Figure 3 or the closed configurations of Figures 4 and 5, or positions therebetween.

2011317389 20 Jan 2016

In the embodiment shown, the diameter of the activation stem 44 at the cylinder seal 70 is less than the diameter of the activation stem 44 at the activation stem seal 78 in both the open and the closed configurations. The central portion 64 comprises a transition from a first end portion 46 diameter to a second end portion 48 diameter, such that the cylinder seal 70 receives a first cylindrical portion of activation stem 44 of lesser diameter than a second cylindrical portion received by the activation stem seal 78.

In the embodiment shown, the activation stem housing 74 is attached to a wireline valve casing 82 with a housing seal 84 preventing the passage of the wellbore fluid 50 in the annulus between the housing 74 and the casing 82. The housing 74 further comprises vents 86a fluidly connecting the cylinder chamber 72 through an annular passage 88 to the exterior of the casing 82, via the intermediate chamber 80, radial passages 89a and an axial passage 90 in the activation stem 74.

The intermediate chamber 80 is separated from a retraction chamber 92 via an intermediate seal 94. The retraction chamber 92 is connected via a retraction port 96 to a first hydraulic source. The retraction chamber 92 is separated from an extension chamber 98 by a hydraulic seal 100. The extension chamber 98 is connected to a second hydraulic source via an extension port 102.

In the open configuration of Figure 3, the activation stem 44 is in a retracted position. To move the wireline valve 40 from the open configuration of Figure 3 to the closed configuration of Figure 4, pressure is applied to the extension chamber 98 by the supply of hydraulic fluid through the extension port 102, such that a pressure is applied on an outer axial surface 91 of the second end portion 48 of the activation stem 44. The axial force acting inwardly on the second end portion 48 exceeds the axial force acting outwardly on the first end portion 46 and frictional resistances such that the activation stem 44 moves towards the bore 42. To move the wireline valve 40 from the closed configuration of Figure 4 to the open configuration of Figure 3, pressure is applied to the retraction chamber 92 by the supply of hydraulic fluid through the retraction port 96, such that a pressure is applied on an inner axial surface 93 of the second end portion 48 of the activation stem 44. Hydraulic fluid is also extracted from the extension chamber 98 through the extension port 102.

Figure 5 shows an alternative closed configuration of the wireline valve 40 of Figure 2. To move the activation stem 44 from the open position of Figure 3 to the closed position of Figure 5, mechanical force is applied to the second end portion 48 by rotating a handle 104. Rotation of the handle 104 causes a screw 106 to rotate, the axial position of the screw 106 relative to the bore 42 being restricted by the casing 82

2011317389 20 Jan 2016

such that the screw 106 maintains the same axial position during rotation. The screw 106 is connected by screwthread to a threaded sleeve 108, the rotational movement of the threaded sleeve restricted by the activation stem 44 such that rotation of the screw 106 results in axial movement of the threaded sleeve 108. The axial movement of the threaded sleeve 108 thus causes axial movement of the activation stem 44 such that the wireline valve 40 is moved to the closed configuration of Figure 5. Mechanical movement of the activation stem 44 by the handle 104 may be aided by a pressure in the activation chamber 98.

The closed configuration of Figure 5 may also be used subsequent to the configuration of Figure 4. For example, hydraulic fluid may be used to rapidly move the valve 40 to the closed configuration and thereafter the screw 106 may be rotated to position the threaded sleeve 108 to act as a mechanical lock to prevent movement of the valve 40 to the first configuration under wellbore fluid pressure. Supply of hydraulic fluid to the extension chamber 98 may be stopped, the sleeve 108 maintaining the valve in the closed configuration of Figure 5. In the embodiment shown, as the diameter of the activation stem seal 78 is greater than the diameter of the cylinder seal 70, rotating the screw 106 in an opposite direction to return the threaded sleeve 108 to the position of Figure 4 is sufficient to move the valve 40 to the open configuration of Figure 3; provided that there is no significant pressure difference between the extension 98 and retraction 92 chambers.

Figure 5 further shows the section line B-B indicating the sectional view depicted in Figure 2.

In an alternative embodiment the retraction port may be connected to the cylinder chamber 72. For example, where there is no intermediate chamber 80 and the axial passage 90 extends to the retraction chamber.

It will be apparent to those of skill in the art that the above described embodiment is merely exemplary of the present invention, and that various modifications and improvements may be made thereto, without departing from the scope of the invention.

The terms “comprising”, “including”, and variations thereof, when used in this specification are taken to specify the presence of stated features, integers, steps or components but does not preclude the presence or addition of one or more other features, integers, steps, components or groups thereof. Thus, unless the context clearly requires otherwise, throughout the description and the claims, the words ‘comprise’, ‘comprising’, ‘includes’, ‘including’ and the like are to be construed in an

2011317389 20 Jan 2016

inclusive sense as opposed to an exclusive or exhaustive sense; that is to say, in the sense of “including, but not limited to”.

2011317389 20 Jan 2016

CLAIMS

1. An apparatus for restricting a flow of fluid through a bore, the apparatus comprising:

a bore sealing member; and

an actuation assembly for moving the bore sealing member between a first configuration corresponding to a bore open configuration and a second configuration corresponding to a bore closed configuration, the actuation assembly comprising an activation member with a first end portion and a second end portion, wherein the actuation assembly is configured to isolate the first and second end portions of the activation member from a bore fluid; and

wherein the apparatus is configured to displace substantially the same volume of fluid in the bore in the first configuration and in the second configuration.

2. An apparatus according to claim 1, wherein the apparatus is configured to expose an intermediate portion of the activation member to bore fluid in the first and/or second configuration/s.

3. An apparatus according to either of claims 1 or 2, wherein the apparatus is biased towards the first configuration or towards the second configuration.

4. An apparatus according to any preceding claim, wherein the first end portion of the activation member is configured to be proximal to a bore in the first configuration and the second end portion of the activation member is configured to be distal to the bore in the first configuration.

5. An apparatus according to any preceding claim, wherein the actuation assembly is configured to move the activation member in a direction substantially perpendicular to the bore.

6. An apparatus according to any preceding claim, wherein the actuation assembly further comprises an isolator comprising a first side configured for receiving the first end portion of the activation member, particularly wherein the actuation assembly is configured to separate the isolator first side from the bore fluid and to position an isolator second side in fluid communication with the bore fluid.

2011317389 20 Jan 2016

7. An apparatus according to any preceding claim, wherein the isolator is configured to maintain substantially the same position relative to the bore during movement of the activation member from a first position to a second position, the first position corresponding to the first configuration and the second position corresponding to the second configuration; and/or wherein the isolator is configured to control the bore fluid pressure acting axially on the activation member.

8. An apparatus according to any preceding claim, wherein the first end portion and the second end portion of the activation member are configured to be in fluid communication; or wherein the first end portion and the second end portion are isolated such that the first end portion and second end portions are subjected to different fluid pressures.

9. An apparatus according to any preceding claim, wherein the activation member further comprises a bore sealing member interface located between the first end portion and the second end portion of the activation member.

10. An apparatus according to any preceding claim, wherein the activation member comprises a central portion located between the first and second end portions, the central portion configured to be in fluid communication with the bore fluid.

11. An apparatus according to any preceding claim, wherein the actuation assembly further comprises a first end portion seal and a second end portion seal, the first end portion seal being configured to prevent the first end portion contacting the bore fluid and being configured to seal a first cross-sectional area of the activation member perpendicular to the direction of extension; and the second end portion seal being configured to prevent the second end portion contacting the bore fluid and being configured to seal a second cross-sectional area of the activation member perpendicular to the direction of extension.

12. An apparatus according to claim 11, wherein the first and the second cross-sectional areas are selected from the following:

the first and second cross-sectional areas are the same; or

the second cross-sectional area is greater than the first cross-sectional area; or

the first cross-sectional area is greater than the second cross-sectional area..

2011317389 20 Jan 2016

13. An apparatus according to claim 11 or claim 12, wherein the first and second cross-sectional areas are selected according to one of the following:

a wellbore fluid characteristic;

a wellbore characteristic; and/or

a desired force required to move the bore sealing member between the first and second configurations.

14. An apparatus according to any preceding claim, wherein a second end portion seal diameter is greater than a first end portion seal diameter.

15. An apparatus according to any preceding claim, wherein the apparatus is configured to be hydraulically activated.

16. An apparatus according to any preceding claim, wherein the apparatus comprises a mechanical actuator; such as a mechanical actuator is configured to maintain the apparatus in the second configuration.

17. An apparatus according to any preceding claim, wherein the actuation assembly is configured to prevent rotation of the activation member about an axis parallel to the direction of extension of the activation member.

18. An apparatus according to any preceding claim, wherein the apparatus comprises one or more of: a wireline valve; a BOP; and/or a gate valve.

19. A method of restricting fluid flow in a bore, the method comprising:

moving a bore sealing member from a first configuration to a second configuration by moving an activation member from a first position to a second position, the activation member comprising a first end portion and a second end portion, wherein the activation member is moved from the first position to the second position with the first end portion and the second end portion isolated from a bore fluid; and the apparatus displaces substantially the same volume of fluid in the bore in the first configuration and in the second configuration.

20. A method according to claim 19, wherein the method comprises exposing an intermediate portion of the activation member to the bore fluid in the first and/or second configuration/s.

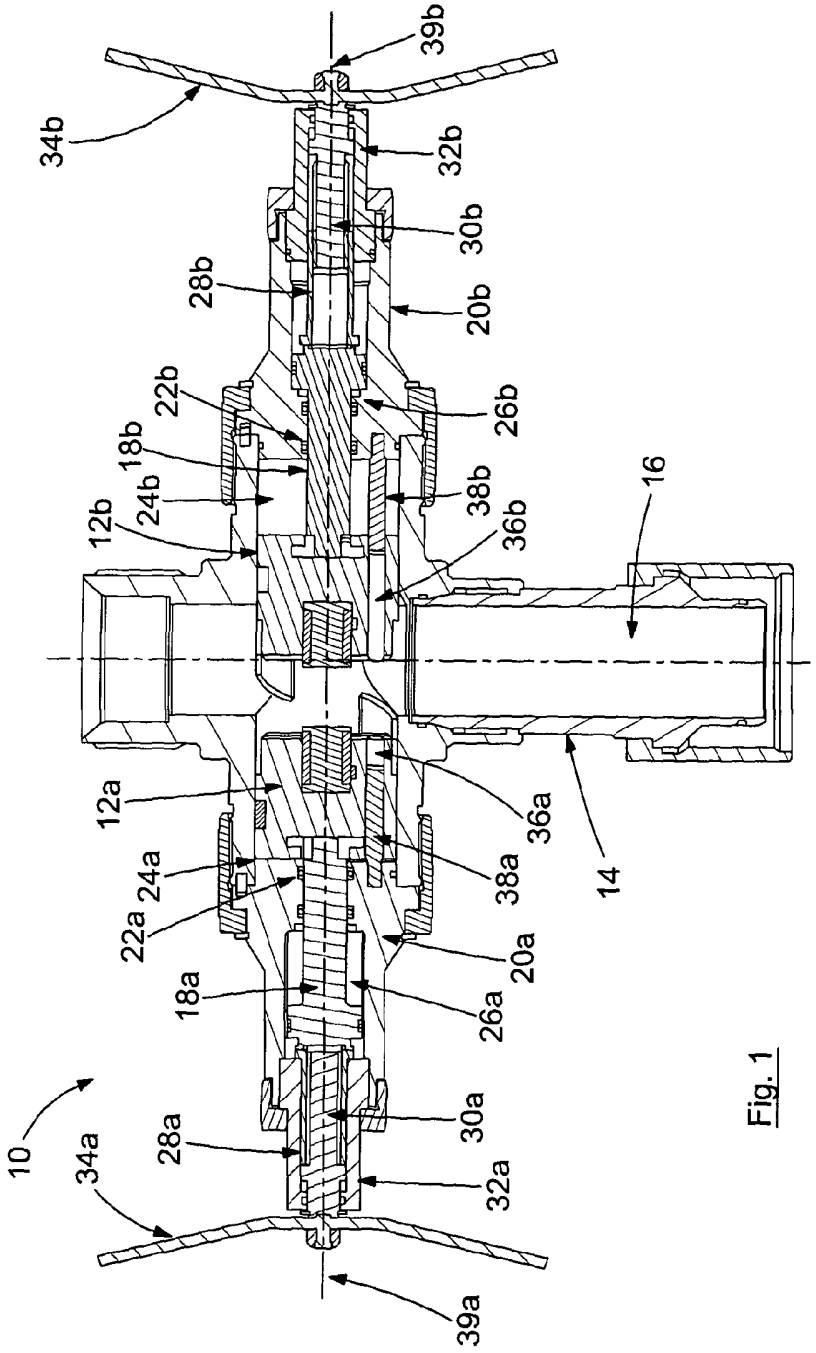
39b
34b
32b
30b
28b
20b
22b
26b
18b
24b
38b
16
12b
36b
12a
36a
24a
38a
14
22a
20a
18a
26a
10
30a
34a
28a
32a
39a

Fig. 1

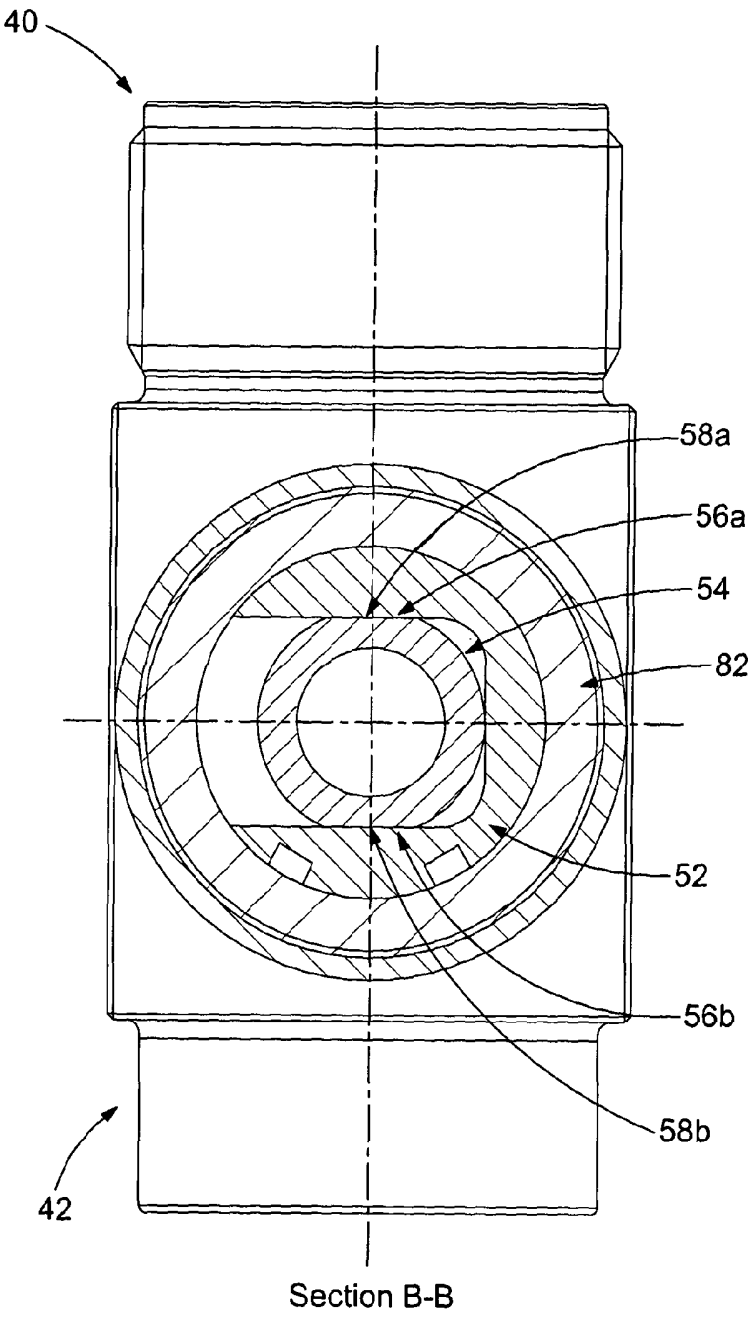

Fig. 2

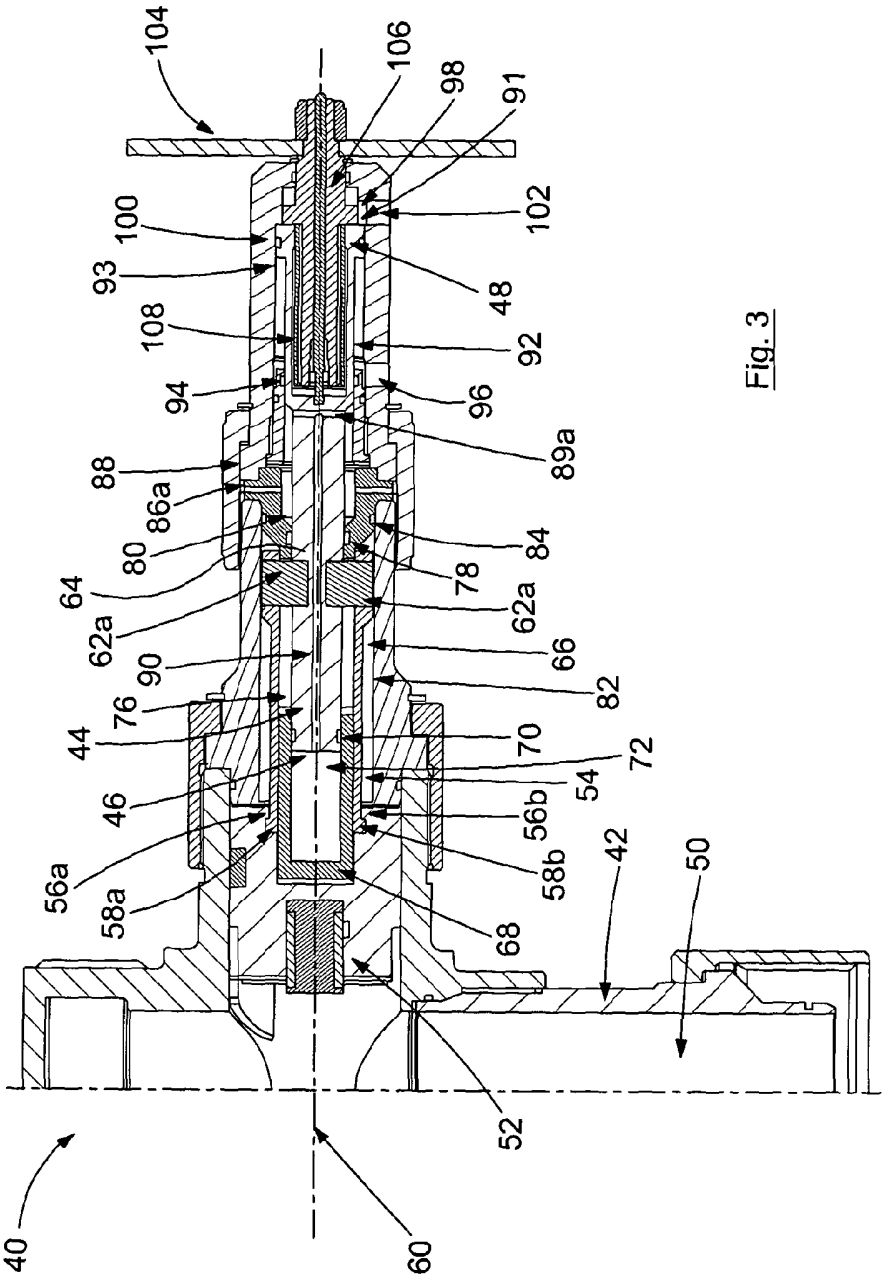
104
106
98
91
102
100
93
48
108
92
94
96
89a
88
86a
80
84
78
64
62a
62a
66
90
82
76
44
70
72
54
46
56b
58b
42
50
56a
58a
68
52
40
60

Fig. 3

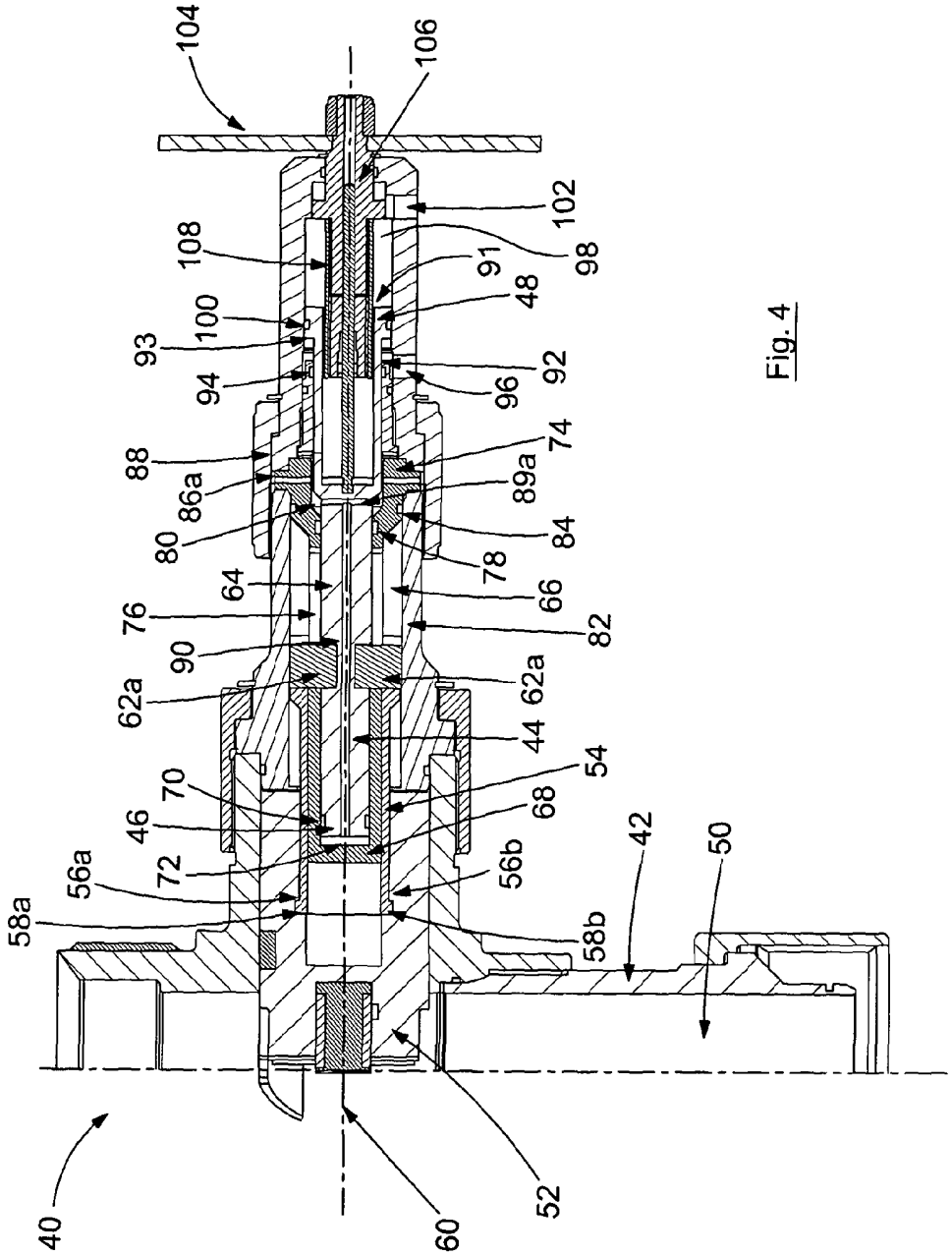
104
106
102
108
91
98
48
100
93
92
94
96
74
88
89a
86a
84
80
78
64
66
76
82
90
62a
62a
44
54
70
68
46
42
50
72
56b
56a
58a
58b
40
60
52

Fig. 4

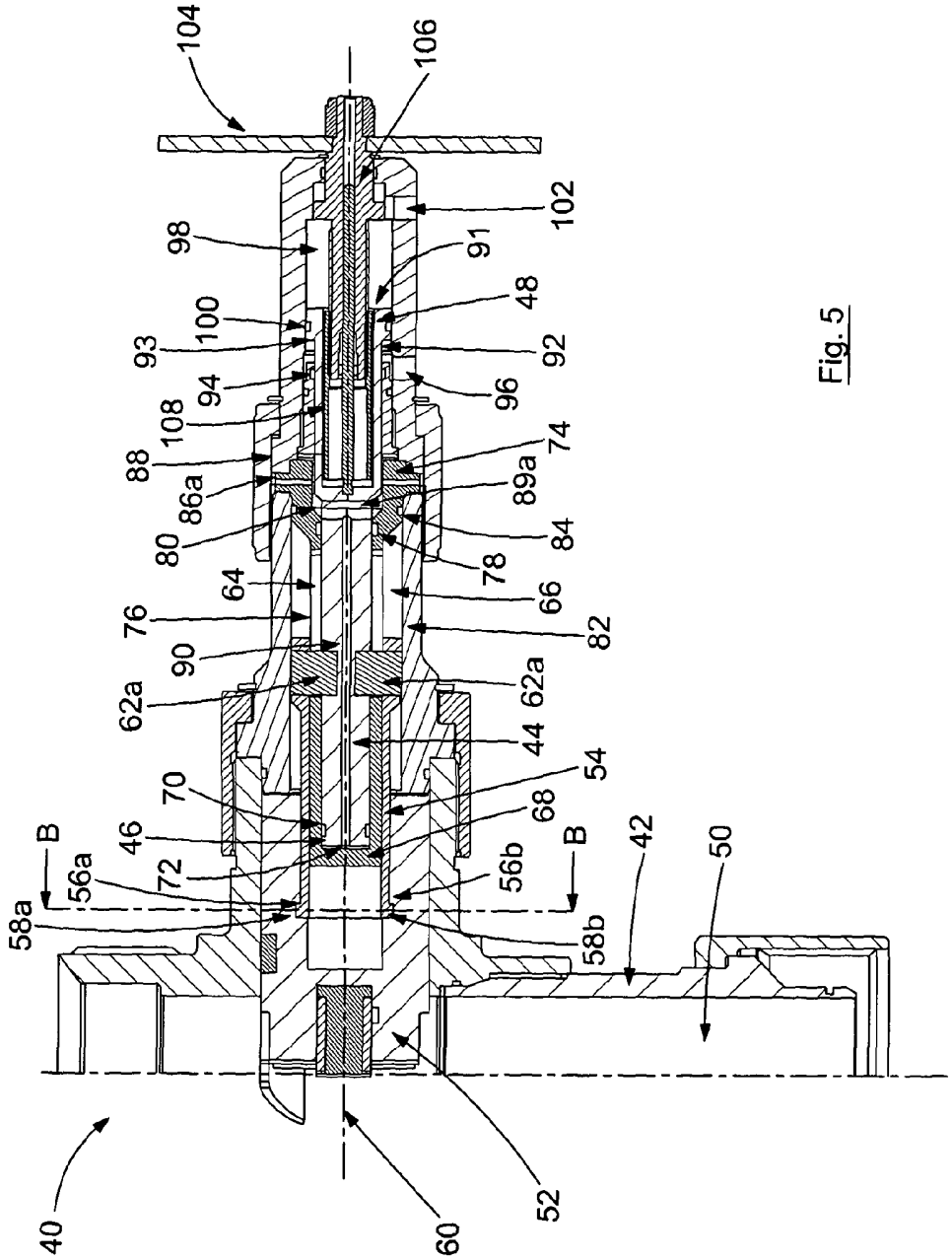
104
106
102
98
91
48
100
93
92
94
96
108
88
74
86a
89a
80
84
78
64
66
76
82
90
62a
62a
44
54
70
68
B
46
B
42
50
72
56a
56b
58a
58b
40
60
52

Fig. 5