O. O. CLARK.

BABY CARRIER FOR VEHICLES.

APPLICATION FILED MAR. 19, 1913.

1,125,005.

Patented Jan. 12, 1915.

2 SHEETS—SHEET 1.

Fig. 1

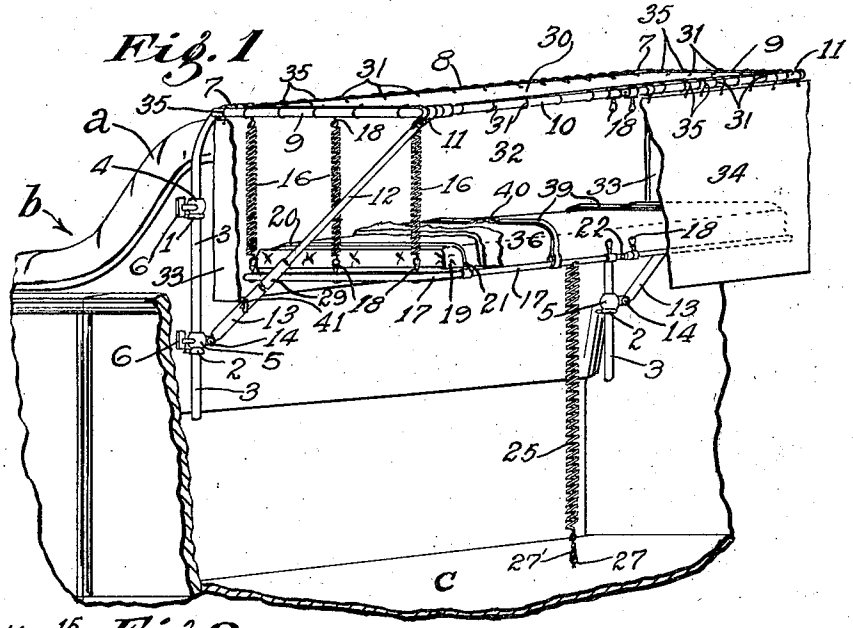

Fig. 2

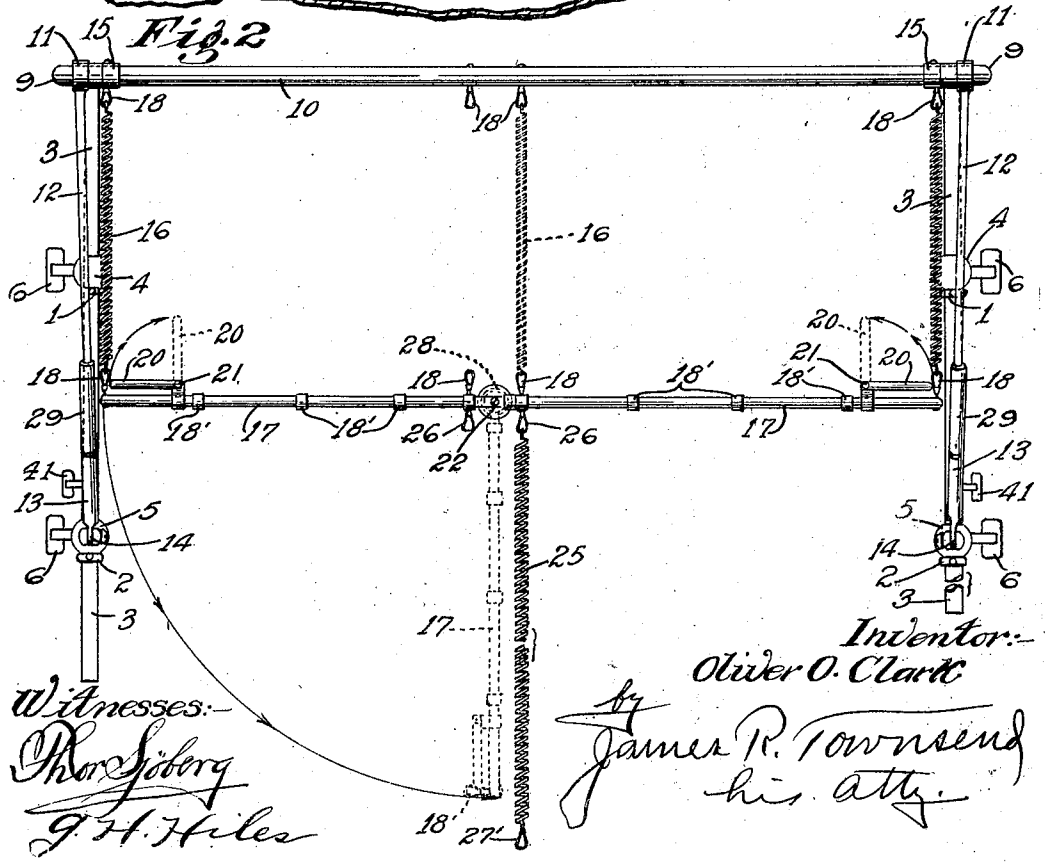

Witnesses:—
Thor Sjöberg
G. H. Hiles

Inventor:—
Oliver O. Clark
by James R. Townsend
his atty.

O. O. CLARK.

BABY CARRIER FOR VEHICLES.

APPLICATION FILED MAR. 19, 1913.

1,125,005.

Patented Jan. 12, 1915.

2 SHEETS—SHEET 2.

Fig. 3

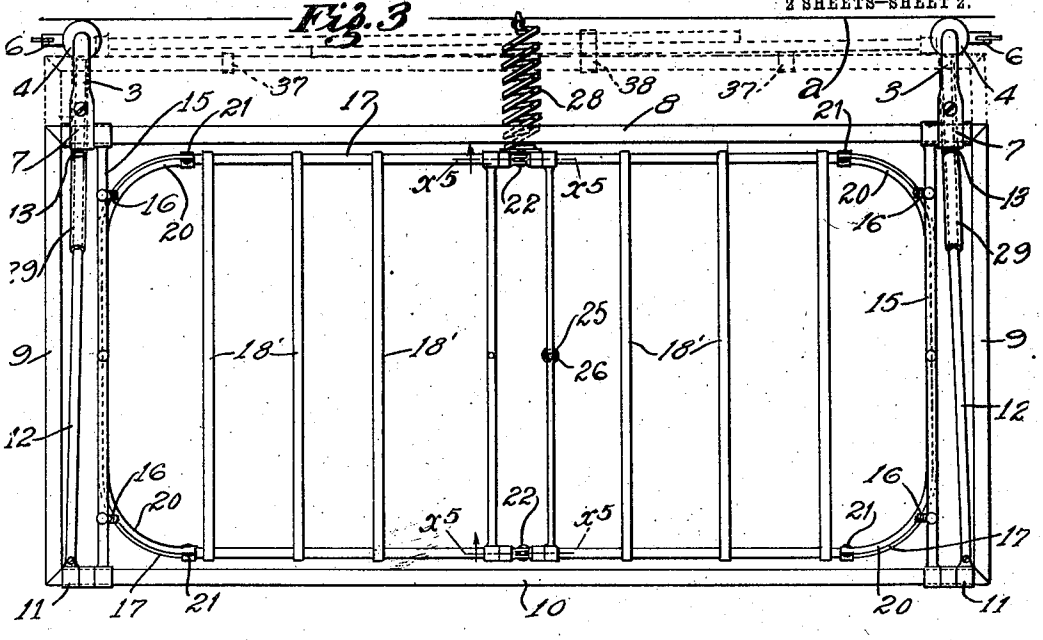

Fig. 4

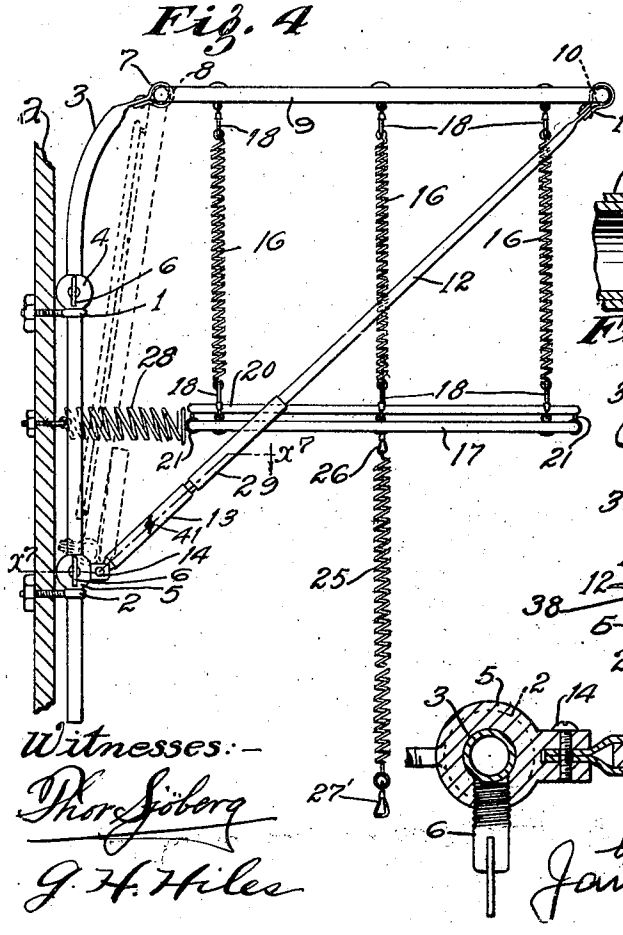

Fig. 5

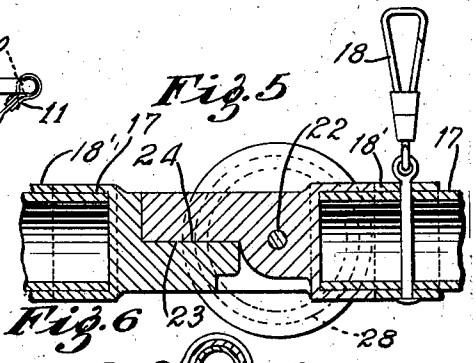

Fig. 6

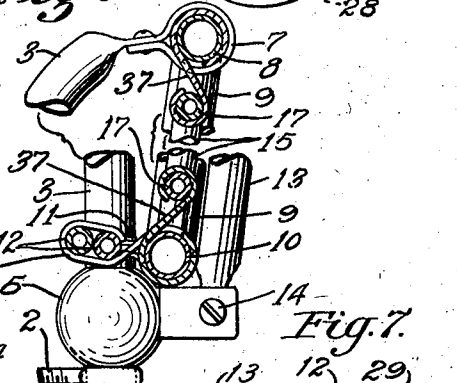

Fig. 7.

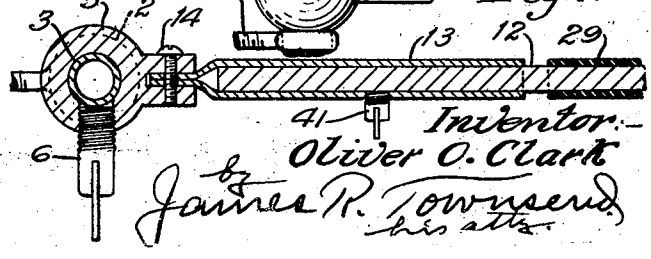

Witnesses:-

Thor Sjöberg

G. H. Hiles

Inventor:-

Oliver O. Clark

by James R. Townsend

his atty.

UNITED STATES PATENT OFFICE.

OLIVER O. CLARK, OF GLENDALE, CALIFORNIA.

BABY-CARRIER FOR VEHICLES.

1,125,005. Specification of Letters Patent. Patented Jan. 12, 1915.

Application filed March 19, 1913. Serial No. 755,558.

To all whom it may concern:

Be it known that I, OLIVER O. CLARK, a citizen of the United States, residing at Glendale, in the county of Los Angeles and State of California, have invented a new and useful Baby-Carrier for Vehicles, of which the following is a specification.

An object of this invention is to make riding in motor cars and the like more pleasurable for adults accompanied by young children and to maximize the comfort of both the adult and the child.

Another object is to effect the foregoing by a simple and substantial device in which the child can either lie or sit at ease without liability of being injured or made uncomfortable by jolting of the car over the roads.

Another object is to so construct and arrange the various parts as to produce a device which will permit of a child sleeping while riding in the vehicle and indeed will induce the child to sleep.

Another object is the production of a device of this character which will occupy minimum space when in use, and one which can be collapsed into minimum storage space when not in use.

Further objects and advantages may appear from the subjoined detailed description.

The accompanying drawings illustrate the invention.

Figure 1 is a perspective view of the invention in unfolded position for use as a bed and attached to a motor car, a fragment of which is shown. Portions of some of the curtains are broken away for clearness of illustration. Fig. 2 is a rear elevation of the device in Fig. 1, detached, one of the standards being partly broken away to contract the view and the bedding, awning and curtains being omitted. The parts are shown in solid lines in positions analogous to positions in Fig. 1 and are indicated in broken lines in positions for use as a seat. Fig. 3 is a plan view of Fig. 2. Broken lines indicate positions of parts when the device is in its collapsed storage position. Fig. 4 is an end elevation of Figs. 2 and 3 looking toward the right, a fragment of the seat back being shown in section. Broken lines indicate positions of the parts when the device is in the collapsed storage position of Fig. 3. Fig. 5 is an enlarged vertical sectional elevation on line indicated by x^5 Fig. 3 looking in the direction of the arrow. Fig. 6 is an enlarged broken sectional detail of some of the parts in their folded position. Fig. 7 is an enlarged plan section on irregular line indicated by x^7—x^7 Fig. 4.

The back of the seat a of the vehicle b, which may be a motor car or the like, is provided near each end with upper and lower eye bolts 1, 2 to receive and adjustably fasten cylindrical and preferably tubular standards 3 back of the seat, one at each end thereof.

The standards 3 are provided with and slidably engage adjusting upper and lower sleeves forming stops 4, 5 which rest upon the eye bolts 1, 2 respectively and which are adjustably fixed at any suitable point along the standards by thumb screws 6 so as to regulate the height of the standards above the floor c of the vehicle. The standards 3 are rearwardly curved at their upper ends and hinged at 7 to a front side bar 8 of a preferably rectangular carrier-frame also having end bars 9 and a rear side bar 10 which is hinged by universal joints 11 to telescopic brackets comprising upper and lower separable members 12, 13, the upper members having the universal joints 11 and the lower members being hinged at 14 to the lower stops 5 so as to support the rear bar 10 of the carrier-frame as shown in solid lines in Figs. 1 and 4. It is thus seen that by adjusting the stops 4, 5 relative to the standards 3, the standards may be raised or lowered to effect vertical adjustment and leveling of the carrier-frame and that by separating the bracket members 12, 13 the carrier-frame may be folded down or collapsed as in broken lines in Fig. 4.

The carrier-frame is provided adjacent the end bars 9 with hanger bars 15 which are fastened to the front and rear bars 8, 10 and which are resiliently connected at suitable intervals by vertical helical tension suspension springs 16 to the ends of a rectangular mattress frame 17, and the carrier-frame and mattress frame are fastened to the springs by any suitable means as by snap hooks 18 that together with the springs detachably connect the carrier and mattress frames.

The mattress frame 17 is provided from side to side with cross bars 18′ to support a mattress 19 which is detachably secured at its ends to the mattress frame by upwardly bowed straps 20 that are hinged at 21 to the

mattress frame. The mattress frame 17 may be jointed or hinged at 22 in such manner that either end of the mattress frame and mattress may be dropped downward to form a seat as indicated in broken lines in Fig. 2 and so that the mattress frame cannot be bent upward at the joint as clearly shown in Fig. 5 where the hinge is provided with seats 23, 24 in opposition against upward bending. The mattress frame 17 may be connected by one or more lower vertical helical tension springs 25 to the floor *c* of the vehicle and said spring may be detachably connected at its upper end by a snap hook 26 to one of the cross-bars 18 and at its lower end by an eye bolt 27 and snap hook 27′ or the like to the floor. It is thus seen that the mattress frame 17 and the mattress 19 are resiliently and adjustably suspended above the floor of the vehicle and that the upper and lower springs 16, 25 pull against one another to minimize vertical movement and also tend to prevent horizontal swinging of the mattress.

The tendency to horizontal forward and backward swinging of the mattress may be further reduced by a tension compression spring 28 fastened to the front side bar of the mattress frame 17 and to the back of the vehicle seat *a* and the tendency to horizontal sideward swinging may be further reduced by buffers 29 which may be of suitable resilient material as rubber in the form of sleeves that surround the upper bracket members 12 adjacent the ends of the mattress frame 17.

The carrier-frame is provided with a suitable hood which may be constructed as a single element or as shown in Fig. 1 of the drawings preferably comprises an awning 30 fastened horizontally by hooks 31 to the frame carrier bars 8, 9 and 10 and comprises front, end and rear curtains 32, 33 and 34 attached by hooks 35 to the front, end and rear frame carrier bars respectively.

The awning 30 and curtains 32, 33 and 34 may be made of any suitable material as canvas, rubberized cloth, or the like, and it is evident that any of the hood members may be entirely removed or that any desired portion thereof may be detached or slid along the carrier-frame bars 8, 9 or 10, as the case may be, to partly shield and to partly expose the space otherwise entirely inclosed by said members and by the mattress 19 when the awning and curtains are in place.

When the carrier-frame and the mattress frame 17 are swung into the collapsed stored position shown in broken lines in Figs. 3 and 4 and in full lines in Fig. 6, the mattress frame 17 with the mattress 19 and other bedding 36 is held suspended in substantially a vertical position inside of the carrier-frame between the plane of the carrier-frame and the seat back *a* by upper and lower spring clips 37 connecting the sides of the mattress frame to the front and rear carrier-frame bars 8, 10 respectively; and the upper bracket members 12 may be folded alongside of the carrier-frame rear bar 10 and held thereto by a spring clip 38, or the like.

In practice the device may be used as a bed when the parts are in the position shown in solid lines in Figs 1 to 4 inclusive and, if it is desired to use the device for a seat, the upper suspension springs 16 at one end or the other will be released from the upper snap hooks 18, allowing one end or the other of the mattress frame 17 to swing downward to the broken line position in Fig. 2.

When it is desired to store the device, the mattress frame 17 may be detached by unhooking all of the suspension springs 16 from the upper snap hooks 18, whereupon the operator will reverse the mattress frame and disconnect the upper and lower bracket members 12, 13 to allow the carrier-frame to swing downward to bring the mattress and bedding between the carrier-frame and the back of the seat *a*, the curtains 32, 33 and 34 having first been detached or folded inward between the awning 30 and the reversed mattress 19. Then the lower bracket members 13 will be swung upward against the rear carrier-frame bar 10 to prevent swinging of the folded vertically suspended parts as clearly shown in broken lines, Fig. 4.

I do not wish to limit the scope of the invention to the specific construction shown in the drawings, but the construction shown is the one I deem at present most advisable to effect storage of the device in a minimum amount of space and also one which will not interfere with persons occupying the vehicle seat, not shown, to the rear of the device.

The device is shown in Fig. 1 with its carrier-frame substantially flush with the top of the vehicle seat *a* and it is clear that by loosening the thumb screws 6 and raising the standards 3 the device may be raised so as to bring the carrier-frame above the seat, thus increasing the space between the mattress frame 17 and the vehicle floor *c*.

The mattress frame 17 may be provided from front to rear with one or more straps 39 of webbing, or the like, provided with buckles 40 to prevent the child occupying the device from falling over the rear edge of the mattress frame and also to retain the bedding in place when the device is in the stored position.

Means may be provided to prevent relative movement between the bracket members 12 and 13 and also to adjustably hold said members for greater or less extension of the brackets in order that the carrier-frame may be adjusted level regardless of the position of the lower stops 5, and for this

purpose the lower bracket members 13 are provided with thumb screws 41 adapted to bear against the bracket members 12.

I claim:—

1. In combination, a carrier-frame, means horizontally supporting the carrier-frame, a mattress frame, resilient means detachably connecting the mattress frame to the carrier-frame, said mattress frame being hingedly jointed between its ends so that one end can be lowered while the other end is supported by said resilient means to form a seat, and other resilient means connected at one end to the mattress frame and designed to be attached at its other end to the floor of a vehicle and pulling in opposition to the first resilient means.

2. The combination of standards, means slidably supporting the standards, adjustable stops on the standards to limit the sliding of the standards, a carrier-frame horizontally supported from the standards, and a mattress frame resiliently connected to the carrier-frame.

3. The combination of standards, means slidably supporting the standards, upper and lower adjustable stops on the standards to engage said supporting means, a carrier-frame hinged at one side to the standards, bracket rods hinged to the other side of said carrier-frame and to said stops, and a mattress supported by the carrier-frame.

4. A baby carrier comprising vertical standards, a carrier-frame hinged at one side to said standards, a mattress frame, means resiliently connecting the mattress frame to the carrier-frame, and brackets connected to the other side of the carrier-frame and to the standards.

5. A baby carrier comprising vertical standards, a carrier-frame hinged at one side to the standards, a mattress frame suspended from said carrier-frame, and upper and lower bracket members disconnectibly joined together, said upper bracket members being hinged to the other side of the carrier-frame and said lower bracket members being hingedly connected to the standards and adapted to be swung upward against one side of the carrier-frame when the bracket members are disconnected.

6. A baby carrier comprising vertical standards, a carrier-frame hinged at one side to the standards, a mattress frame suspended from said carrier-frame, upper and lower bracket members disconnectibly joined together, said upper bracket members being hinged to the other side of the carrier-frame and said lower bracket members being hingedly connected to the standards and adapted to be swung upward against one side of the carrier-frame when the bracket members are disconnected, and said upper bracket members being foldable alongside of the carrier-frame.

7. A baby carrier comprising standards, a carrier-frame hinged at one side to the standards, a mattress frame, means detachably suspending the mattress frame from the carrier-frame, collapsible means to support the other side of the carrier-frame, and means to suspend the mattress frame from the carrier-frame when the carrier-frame is collapsed and the mattress frame is detached.

In testimony whereof, I have hereunto set my hand at Los Angeles, California this 28th day of February, 1913.

OLIVER O. CLARK.

In presence of—
JAMES R. TOWNSEND,
GEORGE H. HILES.