C. S. PELTON.

FILTER.

APPLICATION FILED DEC. 4, 1912.

1,166,000.

Patented Dec. 28, 1915.

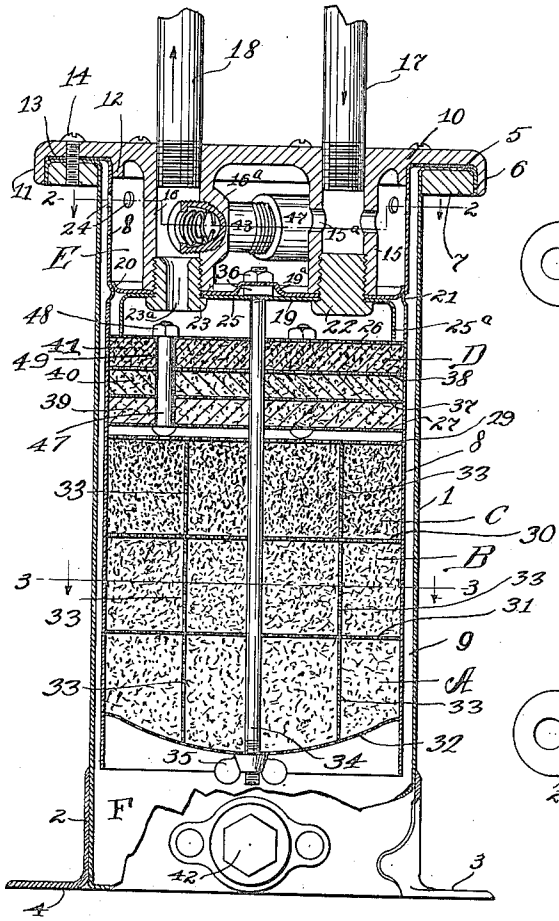

FIG. 1.

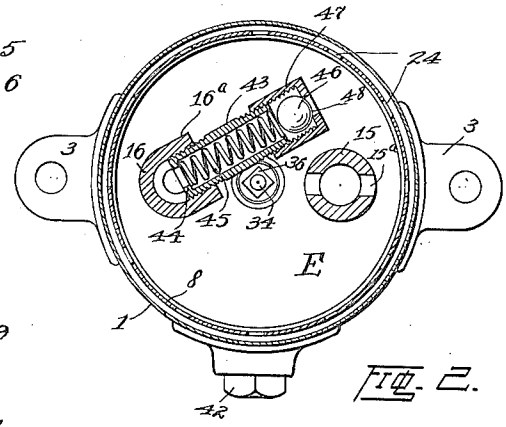

FIG. 2.

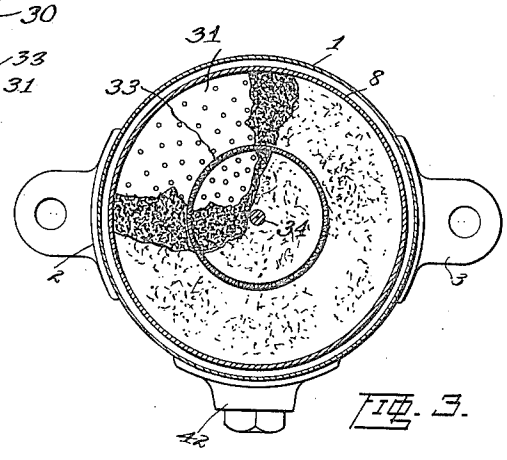

FIG. 3.

Witnesses:
R. L. Bruck.
Brennan B. West

Inventor.
Clyde S. Pelton,
By Hull & Smith
Attys.

UNITED STATES PATENT OFFICE.

CLYDE S. PELTON, OF CLEVELAND, OHIO, ASSIGNOR TO THE MARANVILLE BASE AND FILTER COMPANY, OF CLEVELAND, OHIO, A CORPORATION OF OHIO.

FILTER.

1,166,000. Specification of Letters Patent. Patented Dec. 28, 1915.

Application filed December 4, 1912. Serial No. 734,831.

To all whom it may concern:

Be it known that I, CLYDE S. PELTON, a citizen of the United States, residing at Cleveland, in the county of Cuyahoga and State of Ohio, have invented a certain new and useful Improvement in Filters, of which the following is a full, clear, and exact description, reference being had to the accompanying drawings.

This invention relates to filters and more especially to filters employed for the purpose of removing sediment from oil.

While certain features adapt my filter for general application, it is designed more particularly for use in connection with the lubricating systems of automobiles and with special reference to the incidents of use to which such systems are subjected.

Among the objects which it is exceedingly desirable, if not absolutely necessary, to obtain are efficiency of filtration, cooling of the oil in transit through the filter, and great capacity whereby it is possible to employ a filter of small dimensions (and hence occupying but a small amount of space) for a comparatively long period of time without the necessity of disassembling, cleaning, and renewing the filtering material therein.

I obtain the foregoing objects and others which will appear hereinafter by the construction illustrated in the drawings forming a part hereof, wherein:

Figure 1 represents a longitudinal sectional view taken through a filter constructed in accordance with my invention, part of the bottom being shown in elevation; Fig. 2 a transverse sectional view corresponding to the line 2—2 of Fig. 1; and Fig. 3 a similar view, corresponding to the line 3—3 of Fig. 1, certain parts being broken away.

Describing the various parts herein by reference numerals, 1 denotes the outer shell or casing of the filter, said shell being preferably a sheet metal cylinder having its lower end provided with brackets 2 of relatively heavy metal, each bracket having a horizontal flange 3 with an aperture 4 therethrough whereby the filter may be conveniently fastened to a supporting base. At its upper end the shell or casing 1 is bent outwardly and then downwardly, as shown at 5 and 6, to provide an inverted U-shaped channel in which there is inserted a stiffening ring 7 of relatively heavy metal, the ring being secured in any desirable manner, as by soldering.

Depending within the shell or casing 1 is a shell 8 of similar contour to the first mentioned shell and spaced therefrom to provide an annular channel 9. The upper end of the shell 8 is provided with a cover 10 of relatively heavy metal. This cover is provided with a downturned flange 11 at its periphery, the inner diameter of the flange being sufficient to enable the cover to be fitted on top of the reinforced upper end of the shell 1, the flange forming a snug fit with the part 6 thereof. The cover is also provided with a depending rib 12 around which the upper end of the shell 8 is fitted, and the space between the flange 11 and rib 12 is provided with a gasket 13. The cover and its attached parts may be secured to the top of the shell 1 by means of screws 14 extending through the cover and threaded into the ring 7. The outer surface of the rib 12 is flared somewhat, whereby the tightening of the screws 14 tends to spread the top of the shell 8 and make a snug fit between the same and the rib.

Depending from the cover, within the shell 8, is a pair of hollow studs 15 and 16. These studs may, and preferably will, be cast with the cover. The hollow stud 15 communicates with the inlet pipe 17 and the hollow stud 16 with the outlet pipe 18. The upper part of the casing 8 forms a settling chamber E into which the entering oil is admitted, the bottom of this chamber being defined by a sheet metal plate 19 having an upturned flange 20 at its outer edge which may be soldered to the adjacent inner surface of the casing 8, the casing at this point being preferably bent inwardly as shown at 21 to form a supporting rib for the flange. The plate 19 extends beneath the bottoms of the studs 15 and 16 and is conveniently supported by and secured thereto through plugs 22 and 23 which are threaded into the lower ends of these studs and are provided with heads adapted to intermediately engage the lower surface of the plate and hold the same in engagement with the bosses. The stud 15 is provided with outlet openings 15^a through which the entering oil may pass into the settling chamber E defined by the cover 10, plate 19, and the upper portion of the shell 8. The plug 23 is perforated, as

shown at 23ª, whereby the cooled and filtered oil may pass through the stud 16 into the outlet pipe 18. Apertures 24 are provided in the upper portion of the casing 8, adjacent to the cover, through which the oil collecting below the cover may pass into the annular chamber 9.

The bottom of the inner shell 8 does not extend as far as the bottom of the casing 1, whereby a passageway is provided beneath the bottom of the shell 8 for the oil descending through the annular channel 9.

The filter proper is provided within the inner shell 8 and the construction is as follows:—

Beneath the plate 19 is an inverted pan or concave plate 25 having a downturned wall 25ª, the rim whereof is in engagement with the top plate 26 of the filter proper at a short distance from the inner shell 8. The plate 26 is perforated and fits snugly within the inner shell. Beneath this plate and similarly constructed and arranged is a plate 27, said plates being connected by bolts 28. Under the plate 27 are four vertically spaced plates 29, 30, 31 and 32. These plates are perforated and have their outer peripheries in substantial engagement with the inner surface of the shell 8. The bottom plate 32 has a concave upper surface. The last series of plates provides three chambers A, B, and C, each chamber having a cylindrical screen 33 therein of less diameter than the diameter of the inner shell and extending from top to bottom of the compartment whereby each compartment is divided into two concentric chambers and the plates are spaced apart and the bottom plates of the compartments are supported.

The central portion of the plate 19 is preferably bulged upwardly, as shown at 19ª, the upwardly projecting seat thus formed being perforated for the reception of a bolt 34 which extends through the central portions of all of the plates 25, 27, 29 and 32, inclusive. The lower end of the bolt is provided with a wing nut 35 adapted to engage the downwardly bulged surface of the plate 32 and the upper end of the bolt is clamped to the seat 19ª by means of nuts 36.

By the construction described, it will be apparent that the inner shell and the parts associated therewith are suspended from the hollow studs or bosses 15 and 16 and that the said inner shell and the entire assembly therewithin may be removed by the act of removing the cover 10 from the outer casing 1.

The compartments A, B, and C are filled with finely divided filtering material, preferably boneblack, the screens 33 forming a support for the perforated plate thereabove and serving to prevent the boneblack from packing too closely as well as from shifting from one side to the other whereby a thin layer might be produced in a certain portion of the compartment, allowing the oil to pass through with improper filtration.

The compartment D formed between the plates 26 and 27 may be provided with two similar perforated plates 37, 38 dividing said compartment into three vertically arranged chambers. Whether these extra perforated plates be employed or not, the compartment D will be provided with several layers of wool felt, indicated at 39, 40, and 41 respectively, said layers being of progressively increasing fineness or density from the bottom to the top.

In operation the oil to be filtered enters the chamber E (formed between the cover 10, plate 19, and upper wall of the shell 8,) in a more or less heated condition through the supply pipe 17 and the hollow boss or stud 15 and overflows through the openings 24 into the annular channel 9. The oil, being spread out in a thin film throughout its passage through the channel, will be cooled, the cooling effect being increased by the movement of the vehicle, where the filter is applied to a motor vehicle, such as an automobile or power-boat. The oil passes through the settling chamber F, provided in the bottom of the outer casing below the shell 8, and ascends under pressure through the compartments A, B, C, and D, through the bore 23ª of the outlet plug 23 and through the pipe 18 to the point of use. In passing through the boneblack in the compartments A, B, C, and the different layers of wool felt in the compartment D, the sediment is effectively removed from the oil, the wool felt intercepting also any fine particles of boneblack that may be present in the oil after passing through the compartments A, B, and C. Owing to the construction set forth and the double circulation of the oil (downwardly through the annular channel 9 and upwardly through the various filtering media), the oil is delivered in a clean, comparatively cool condition into the outlet pipe. The settling chambers E and F receive a considerable portion of the sediment, especially the heavier and coarser sediment, leaving the bone black and wool felt to retain the finer and lighter sediment. The settling chamber F may from time to time be cleaned by removing the plug 42.

The inverted pan 25, 25ª, serves to prevent the plate 26 from buckling or warping under the pressure to which it is subjected by the flow of oil through the filter. The rim of the pan engages the plate a short distance within the periphery, where the need for support is the greatest, and is very efficient in preventing the yielding of the plate and the consequent inefficient filtering of the oil. Furthermore, should the wool felt layer beneath this plate fail to fit snugly against the inner surface of the shell 8, whereby a

passage might be provided for incompletely filtered oil containing boneblack or other foreign material, such oil will be trapped between the downturned wall 25ª of the pan or concave plate 25 and the inner shell and, before it can escape, must pass through the perforated plate 26 and the wool felt therebeneath.

Conditions may arise wherein the flow of oil through the filter will be impeded or even stopped, as by the clogging of the filter parts or the action of cold weather upon the oil. In such event, it is desirable that lubricating shall not be suspended, and I have accordingly provided a by-pass through which the oil may pass direct, short circuiting the filter when the pressure exceeds a predetermined amount. This by-pass is conveniently provided within the first settling chamber E and is conveniently constructed as follows: The hollow stud 16 is provided with a boss 16ª into which there is threaded a tube 43, such tube having an annular seat 44 at its inner end against which one end of the helical spring 45 may bear, the opposite end of the spring bearing against a ball valve 46 mounted within a cap 47 which is threaded on to the outer end of the tube 43. This cap is provided with an aperture 48 which is controlled by the valve. It will be apparent that, when the pressure within the settling chamber E (and hence within the filter) reaches a predetermined point, the valve 46 will be unseated against the action of the spring and oil will be forced by the action of the pump from the settling chamber E through the pipe 18 without passing through the filter.

It will be observed that the layers of wool felt 39, 40, and 41 and their coöperating screen plates 26, 27, 37, and 38 form a unitary filtering chamber. Bolts 47 extend through the screen plates and serve to connect the same. For the purpose of preventing the compression of the several layers of wool felt by the operation of setting up of the nuts 48, spacing sleeves 49 are provided between adjacent plates.

By the construction and arrangement of parts disclosed herein, the heated oil supplied to the settling chamber E flows downwardly in a thin annular film between the inner and the outer shells, following the natural thermal path of a liquid in process of cooling. From the settling chamber F, the oil passes in a warm, easy-filterable condition through the various filtering compartments within the shell to the discharge outlet pipe 18.

Having thus described my invention, what I claim is:—

1. In a filter, the combination of an outer shell, a cover therefor having inlet and outlet connections, an inner shell supported by the cover and projecting toward the bottom of the outer shell and spaced from the side wall and the bottom thereof, there being a plurality of openings adjacent to the upper end of the inner shell, a plate extending across the inner shell below said openings and forming a chamber with said shell, filtering devices within the inner shell and below said plate, and a connection extending through said plate for supplying filtered oil through the outlet.

2. In a filter, the combination of an outer shell, a cover therefor having inlet and outlet connections, an inner shell beneath the cover and projecting toward the bottom of the outer casing and spaced from the side wall and the bottom thereof, a plate extending across the inner shell below the cover and forming a chamber with said shell, filtering devices within the inner shell and below said plate, means for supplying liquid from said chamber to the space between the shells, and a connection extending below said plate for supplying filtered oil through the outlet.

3. In a filter, the combination of an outer shell, a cover therefor having a pair of hollow bosses forming respectively an inlet and an outlet connection, an inner shell carried by said cover and forming an annular passageway with the outer shell, a plate extending across the inner shell beneath the cover, plugs threaded into the lower ends of the studs and connecting the plate thereto, the plug for the inlet connection being solid and that for the outlet connection being perforated, and the outlet connection being perforated above said plate, means for supplying liquid from the chamber to the said passageway, and a filtering device within the inner shell below said plate.

4. In a filter, the combination of a casing, transversely arranged perforated plates within the casing dividing the same into a plurality of compartments, rings in said compartments of less diameter than the said compartments and serving to support the plates thereabove, filtering material in said compartments, and means for supplying liquid to be filtered to the casing and through the compartments.

5. In a filter, the combination of an outer shell, a cover therefor, a pair of hollow studs projecting downwardly from the cover, an inner shell beneath said cover and forming an annular passageway with the outer shell, a plate extending across the inner shell and connected to said studs, a supply pipe communicating with one of the studs, said stud and the inner shell being perforated above said plate, a series of perforated plates extending across the inner shell and forming compartments for filtering material, spacers in said compartments adapted to support the plates thereabove, a bolt connecting the first mentioned plate and

the bottom plate of the series, and means whereby the filtered liquid may pass through the outlet stud.

6. In a filter, the combination of a shell, a cover therefor, a liquid connection carried by the cover and projecting into the interior of the casing, a series of transverse filtering cells or compartments within the casing, and means for suspending said series of compartments from the liquid connection.

7. In a filter, the combination of an outer shell, a cover therefor, an inner shell supported by the cover and projecting downwardly within the outer shell and spaced therefrom to form an annular passageway therewith, means for supplying liquid to the annular passageway, an outlet connection carried by said cover, a vertical series of compartments in the inner shell having filtering material therein, and each having a perforated bottom plate, and means for suspending said plates from the cover.

8. In a filter, the combination of a shell, a plurality of perforated plates extending across said shell, spacing rings resting on said plates and adapted to support each a plate thereabove, finely divided filtering material interposed between said plates, and means for supplying liquid through said shell.

9. In a filter, the combination of a shell, a pair of perforated plates extending across said shell, a perforated spacing ring resting on one of said plates and adapted to support the other plate thereabove, finely divided filtering material interposed between said plates, and means for supplying liquid through said shell and through the material between said plates.

10. In a filter, the combination of a shell, means for supplying liquid longitudinally through said shell, a plurality of filtering compartments in said shell, a pair of perforated plates extending across the shell between the filtering compartments and the outlet end of the shell, and a plurality of layers of wool felt interposed between said plates, said layers being of progressively increasing fineness toward the outlet end of the shell.

11. In a filter, the combination of a shell, means for supplying liquid longitudinally through said shell, perforated plates extending across the shell, and a plurality of layers of wool felt interposed between said plates, said layers being of progressively increasing fineness toward the outlet side of the shell.

12. In a filter, the combination of an outer shell, a cover therefor, an inner shell within the outer shell and carried by said cover, means for supplying liquid to the space formed between the shells and thence to the interior of the inner shell, a plurality of filtering compartments within the inner shell, said compartments being defined between transversely extending perforated plates, and a bolt operatively connected to the cover and to the bottom plate of the series, whereby the filtering assembly may be removed, together with the cover.

13. In a filter, the combination of an outer shell, a cover for said shell, an inner shell depending from the cover within the outer shell and forming an annular passageway therewith, a plate extending across the inner shell below the top thereof and connected to said shell and to the cover, a vertical series of perforated plates extending across the inner shell, and a bolt connected to the bottom plate of the series and to the first-mentioned plate and extending through the intermediate plates.

14. In a filter, the combination of a shell, a compartment extending transversely of the shell, filtering material in said compartment, a perforated plate on the outlet side of said compartment and having its outer edge in substantial engagement with the inner wall of the shell, a concave plate on the outlet side of the first-mentioned plate and having its rim engaging said plate within and adjacent to the inner wall of the shell, means for supplying oil longitudinally of said shell and through the filtering compartment, and an outlet extending from the inlet side of the second plate.

15. In a filter, the combination of a shell, a plurality of perforated plates extending transversely of said shell and having their outer edges in substantial engagement with the inner wall of said shell, filtering material interposed between said plates, a pan or concave plate having its rim engaging the plate on the outlet side of the filter and within and adjacent to the inner wall of the shell, an outlet extending from said pan, and means for supplying liquid through the filtering material and to the outlet.

16. In a filter, the combination of a shell, a plurality of perforated plates extending transversely of said shell and having their outer edges in substantial engagement with the inner wall of said shell, filtering material interposed between said plates, a ring engaging the plate on the outlet side of the filter and within and adjacent to the inner wall of the shell, an outlet extending from within said ring, and means for supplying liquid through the filtering material and to the outlet.

17. In a filter, the combination of an outer casing or shell, a cover therefor, a pair of hollow studs projecting downwardly from said cover, an inlet pipe communicating with one of said studs and an outlet pipe communicating with the other, plugs threaded into the lower ends of said studs, a plate secured to said studs by said plugs, an inner shell within and spaced from the outer shell and

secured to the outer edge of said plate, the inner shell being provided with an overflow above said plate communicating with the annular space between said shell and said cover, a plurality of plates extending transversely of the inner shell and substantially contacting with the inner surface thereof, filtering material interposed between said plates, and a concave plate also supported on said studs by said plugs beneath the first mentioned plate and having its down-turned rim engaging the topmost perforated plate within and adjacent to the wall of the inner shell, the plug threaded into the outlet stud being perforated and the stud communicating with the inlet pipe having one or more apertures above the first-mentioned plate.

18. In a filter, the combination of a shell, a plurality of perforated plates extending transversely of said shell, filtering material interposed between said plates, bolts extending through the series of plates, and a sleeve surrounding each bolt and interposed between adjacent plates and serving to space the same.

19. In a filter, the combination of an outer shell, a cover therefor, an inner shell carried by the said cover and projecting from the cover toward the lower end of the outer shell and spaced from said outer shell to form an annular channel therewith, said cover being provided with an inlet for supplying liquid to the inner shell and said shell being provided with a partition forming a receiving and settling chamber with the cover, said chamber having a series of openings providing an overflow into the annular channel, filtering elements within and extending transversely of the inner shell below said partition, and an outlet connection carried by the cover and projecting through the receiving and settling chamber and communicating with the interior of the inner shell below said partition.

20. In a filter, the combination of an outer shell, a cover therefor, an inner shell depending from the cover and extending toward the bottom of the outer shell and spaced from the outer shell to provide an annular chamber therewith, a partition extending across the inner shell below the top thereof and forming with the cover a receiving and settling chamber, said chamber being provided with overflow openings communicating with the annular chamber, a plurality of transverse filtering cells within the inner shell and below the said partition, the uppermost of said cells having a perforated plate covering the same, a ring interposed between said partition and said plate and adapted to engage said plate within the peripheral portion thereof, and means supporting said cells from said partition, said cover being provided with inlet and outlet connections, the former communicating with the receiving and settling chamber and the latter communicating with the space within the ring and below the partition.

21. In a filter, the combination of a casing, a plurality of perforated plates extending transversely of said casing and forming compartments or cells, filtering material in said compartments or cells, and a perforated ring in each cell, surrounding the central portion thereof, each of said rings being of less diameter than the cell and supporting the bottom plate of the cell next thereabove, and means for circulating liquid through the casing and the cells therein.

22. In a filter, the combination of a shell, a series of compartments or cells extending transversely of said shell, said compartments or cells containing filtering material of progressively increasing fineness from the inlet side of the series toward the outlet side thereof, and connections for supplying liquid through said shell and the compartments or cells thereof.

23. In a filter, the combination of a shell, a plurality of perforated transverse plates in said shell, said plates forming therebetween filtering cells or compartments, each cell or compartment being substantially filled with wool felt and the wool felt in said compartments being of increasing fineness from the inlet side of the compartments to the outlet side thereof, and means for circulating liquid through said shell and the cells or compartments thereof.

24. In a filter, the combination of an outer shell, an inner shell within the outer shell and having a receiving and settling chamber in the upper end thereof, a series of transversely extending filtering cells or compartments beneath said chamber, a cover for both shells, an inlet connection carried by the cover and communicating with said chamber, an outlet connection carried by the cover and extending through the bottom of the chamber and communicating with the filtering space therebeneath, and a rod connecting the filtering cells or compartments to the bottom of the chamber and suspending them therefrom.

25. In a filter, the combination of an outer shell, an inner shell within the outer shell and having a receiving and settling chamber in the upper end thereof, a series of transversely extending filtering cells or compartments beneath said chamber the uppermost cell or compartment having a perforated covering plate, a ring between the bottom of the chamber and said plate and engaging said plate within its periphery, a cover for the inner shell, an inlet connection carried by the cover and communicating with said chamber, an outlet pipe carried by the cover and extending through the bottom of the chamber and communicating with the interior of the ring there-

beneath, and a rod connecting the filtering cells or compartments to the bottom of the chamber and suspending them therefrom.

26. In a filter, the combination of an outer shell, a cover for said shell, an inner shell carried by the cover and projecting within the outer shell and forming an annular channel therewith, a plate extending across the inner shell below the cover and forming a receiving and settling chamber with the upper portion of said shell, the chamber being apertured above said plate to provide an overflow communicating with the annular channel, a plurality of vertically spaced perforated plates extending across the inner shell below the first-mentioned plate, filtering material in the compartments formed by and between the perforated plates, an inlet connection carried by the cover and discharging into said chamber, an outlet connection projecting downwardly from the cover and extending through the first mentioned plate and connected thereto, and means connecting the lowest plate of the series to the first-mentioned plate and extending through the intermediate compartments.

In testimony whereof, I hereunto affix my signature in the presence of two witnesses.

CLYDE S. PELTON.

Witnesses:
HAROLD E. SMITH,
J. B. HULL.