March 12, 1929. C. ADLER, JR 1,705,323

SIGNAL SYSTEM FOR HIGHWAY INTERSECTIONS

Filed March 30, 1928 6 Sheets-Sheet 1

Fig. 1.

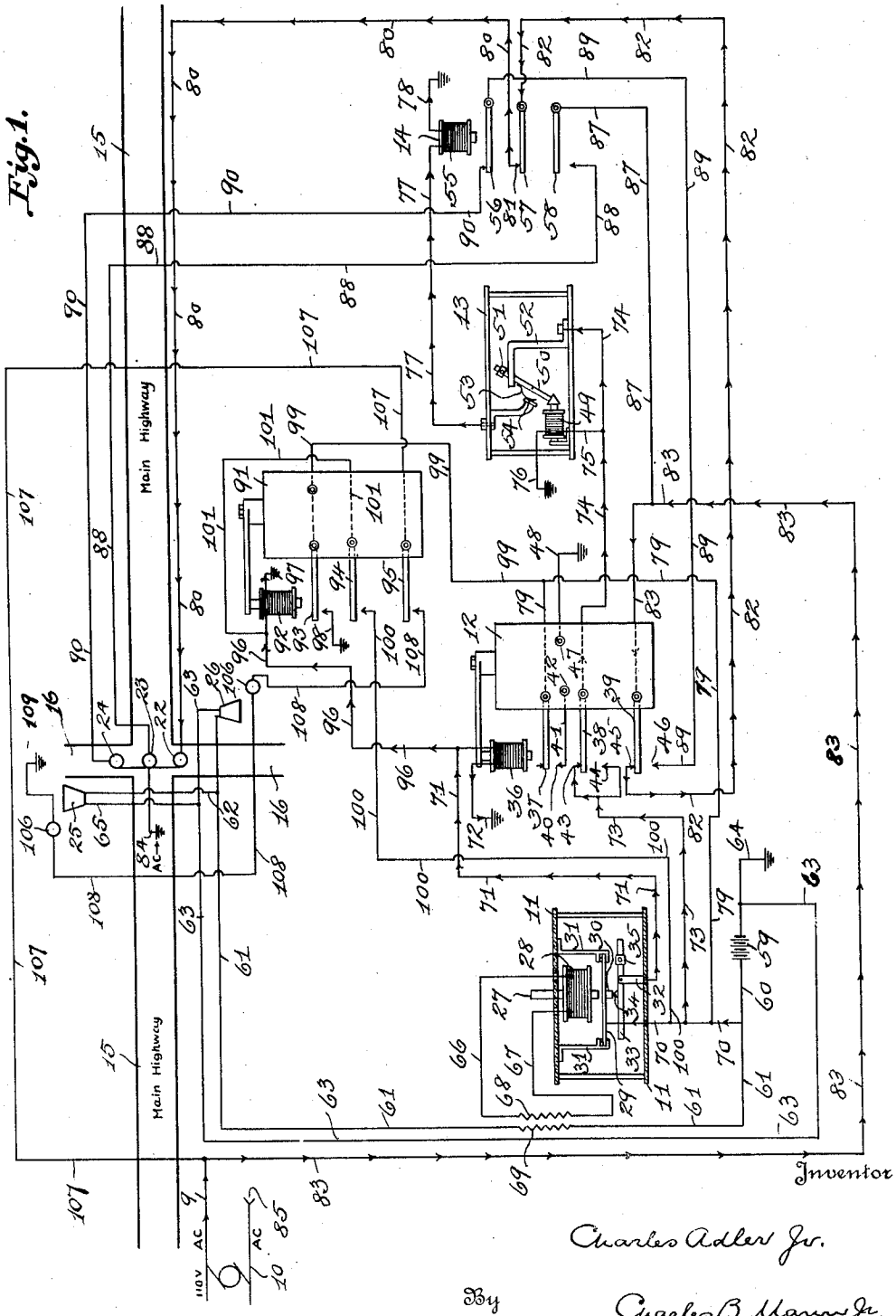

Inventor

Charles Adler Jr.

By Charles B. Mann Jr.,

Attorney

March 12, 1929. C. ADLER, JR 1,705,323

SIGNAL SYSTEM FOR HIGHWAY INTERSECTIONS

Filed March 30, 1928 6 Sheets-Sheet 2

Fig. 2.

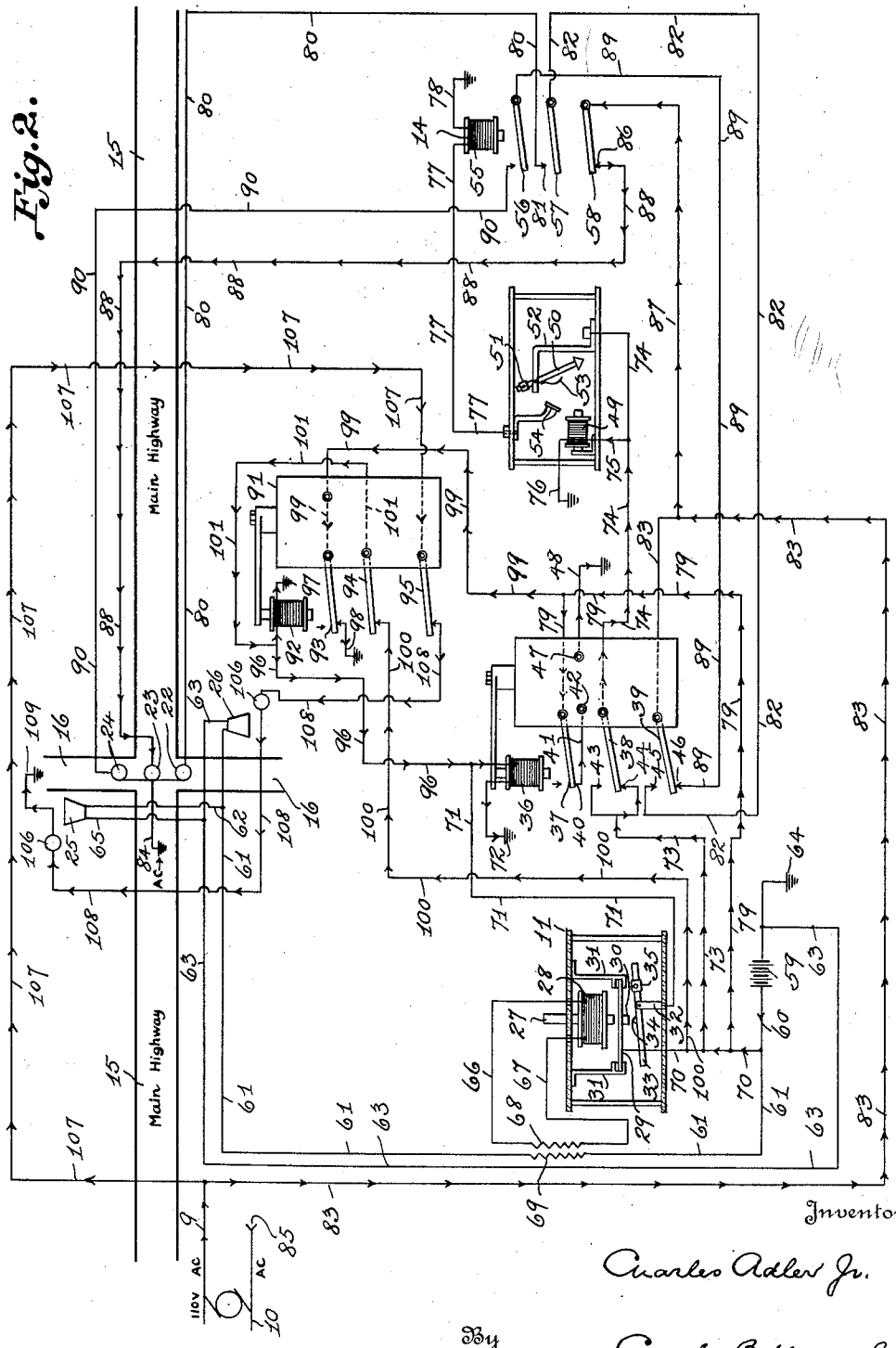

Inventor
Charles Adler Jr.
By
Charles B. Manns Jr.
Attorney

March 12, 1929. C. ADLER, JR 1,705,323

SIGNAL SYSTEM FOR HIGHWAY INTERSECTIONS

Filed March 30, 1928 6 Sheets-Sheet 3

Fig. 3.

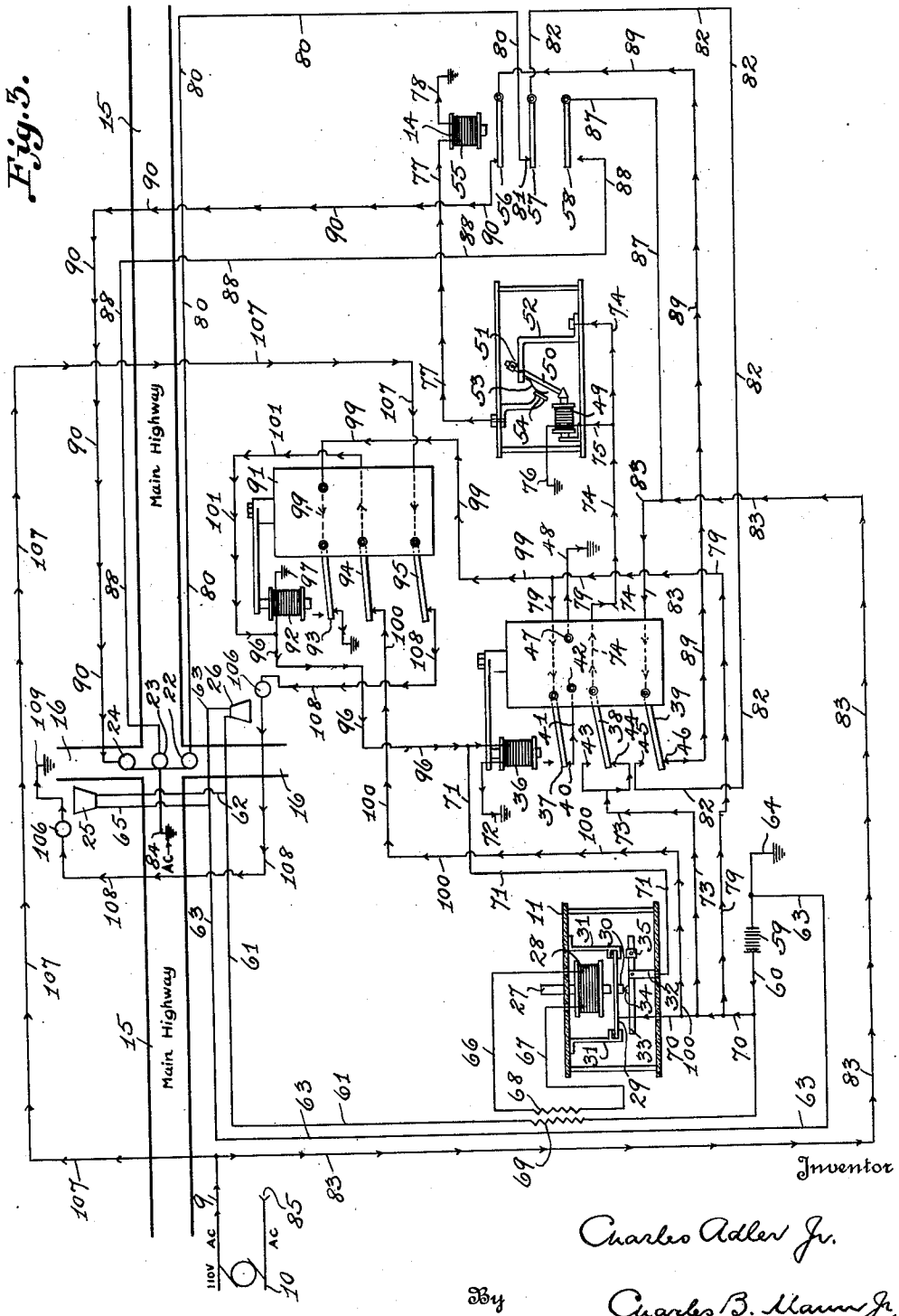

Inventor

Charles Adler Jr.

By Charles B. Mann Jr.

Attorney

March 12, 1929. C. ADLER, JR 1,705,323

SIGNAL SYSTEM FOR HIGHWAY INTERSECTIONS

Filed March 30, 1928 6 Sheets-Sheet 4

Fig. 4.

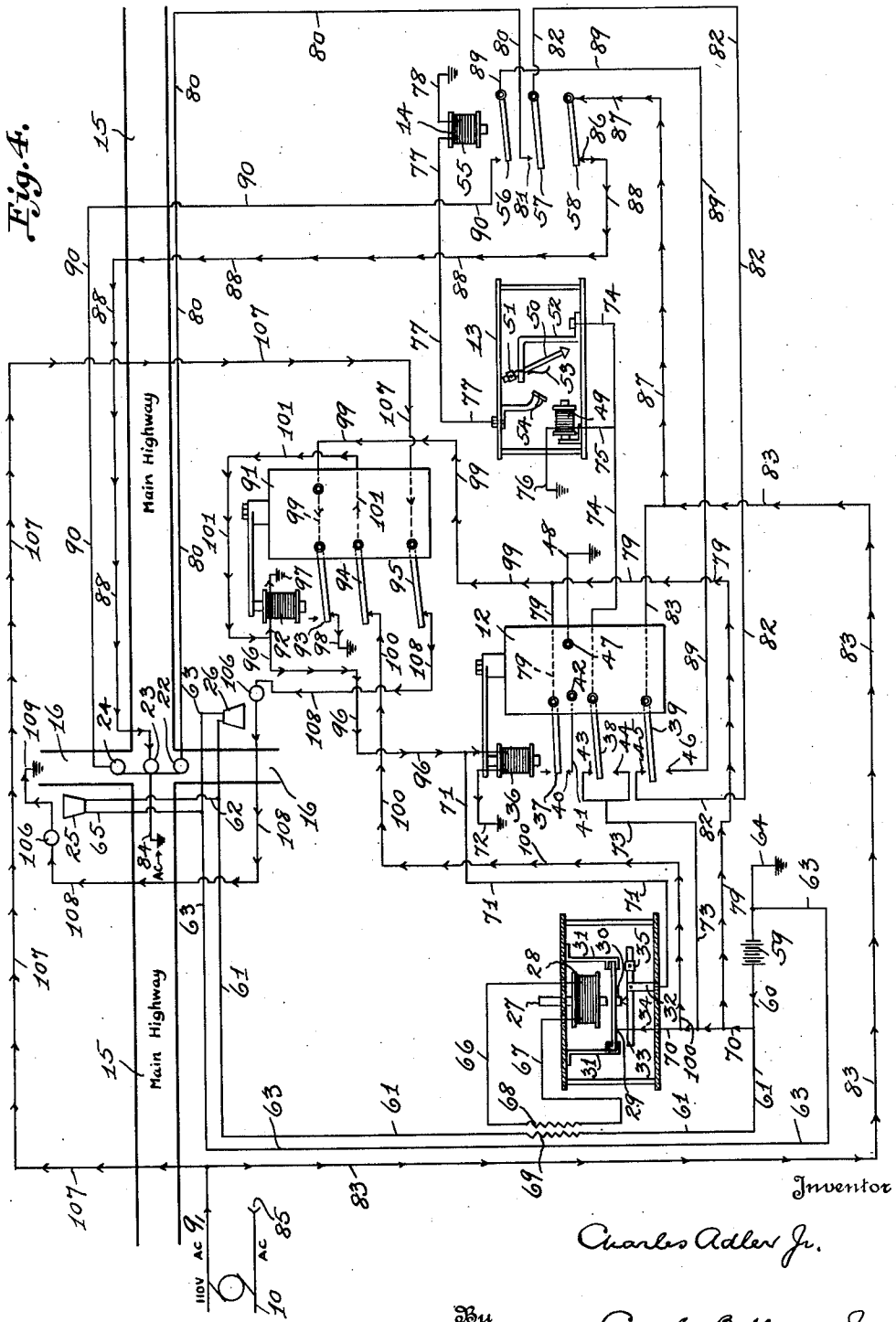

Inventor
Charles Adler Jr.
By Charles B. Mann Jr.
Attorney

March 12, 1929. C. ADLER, JR 1,705,323

SIGNAL SYSTEM FOR HIGHWAY INTERSECTIONS

Filed March 30, 1928 6 Sheets-Sheet 5

Fig. 5.

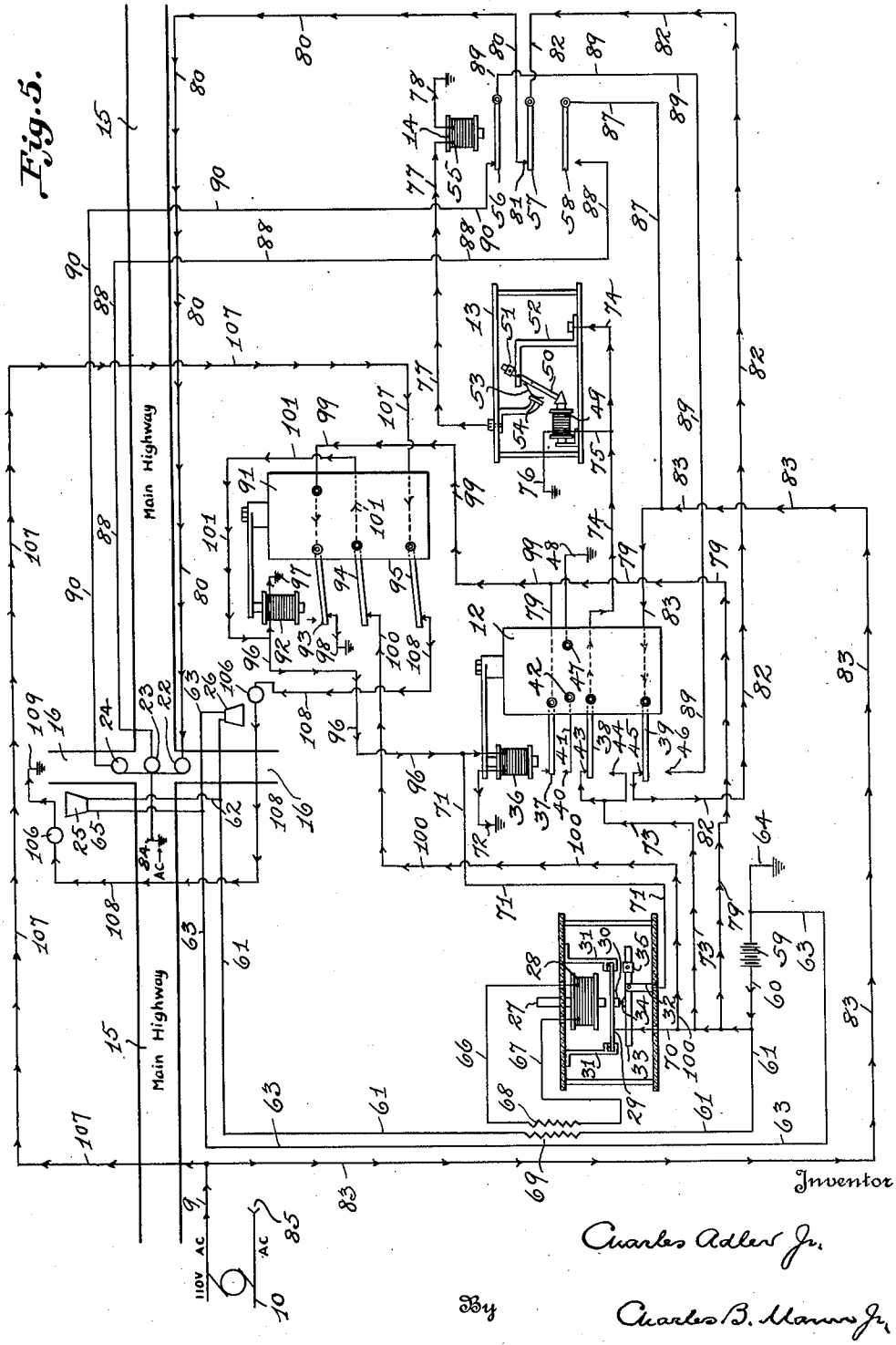

Inventor
Charles Adler Jr.
By Charles B. Manns Jr.
Attorney

March 12, 1929. C. ADLER, JR 1,705,323

SIGNAL SYSTEM FOR HIGHWAY INTERSECTIONS

Filed March 30, 1928 6 Sheets-Sheet 6

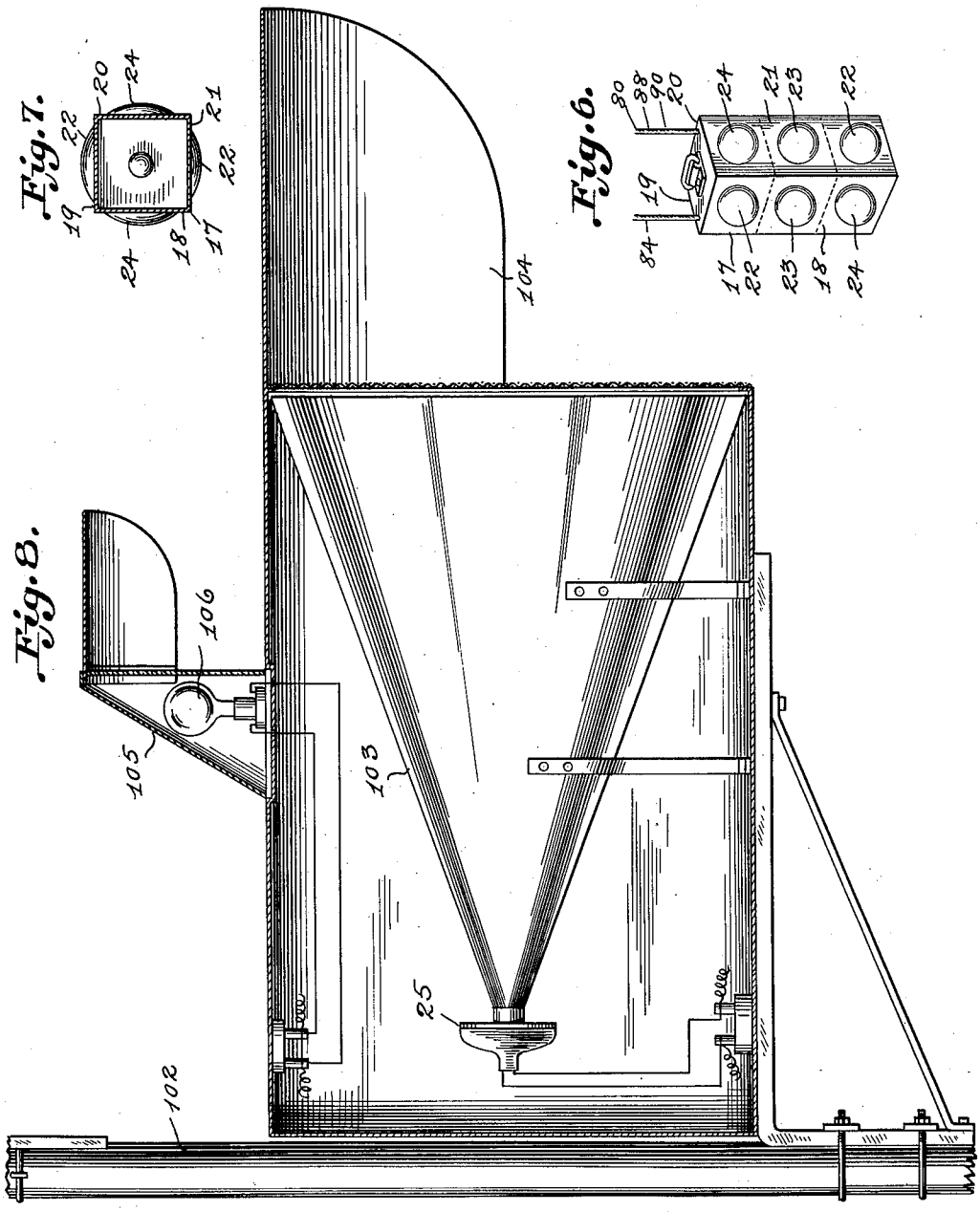

Inventor.

Charles Adler Jr.

By Charles B. Mann Jr.,
Attorney

Patented Mar. 12, 1929. 1,705,323

UNITED STATES PATENT OFFICE.

CHARLES ADLER, JR., OF BALTIMORE, MARYLAND.

SIGNAL SYSTEM FOR HIGHWAY INTERSECTIONS.

Application filed March 30, 1928. Serial No. 266,061.

This invention relates to an improved signal system for highway crossings and has for its main object to provide a system including a three position visual signal and a sound-actuated element whereby a sound produced will cause the signal means to change from stop to caution, and after an interval again change from caution to clear, thereby giving notice to traffic on one higway that the traffic on a cross-highway is to be given the right of way by producing the caution signal and then setting the stop signal for the traffic on the main highway, and at the same time setting a clear signal for traffic on the cross highway.

The above system is described in U. S. Patent Number 1,701,251, granted to me on Feb. 5, 1929.

I have found in actual practice of the above invention that the same embodying the features set forth and claimed in said pending application operates very successfully but that under certain conditions the traffic on the main highway may be placed at a disadvantage by traffic on the cross-highway, in that a series of automobiles on the inferior cross-highway may, by successive sounding of horns, hold the signal at clear for the cross-highway and keep the main-highway signal at stop for an unfair period of time.

It is therefore the object of the present invention to provide means which are combined with the structures disclosed in my said pending application to limit the duration of the clear signal for the cross-highway and to prevent a repetition of that clear cross-highway signal until after a lapse of a predetermined time interval.

In other words, my present improvement is designed so that when the clear signal for the cross-highway traffic has passed through a cycle of operation involving a predetermined time, and that cross-highway signal is ready to be changed to stop, then, no matter if another horn on the cross-highway is again sounded, a clear signal for that cross-highway cannot again be given until a lapse of a time interval, during which latter time interval, traffic on the main-highway will be given right of way.

Another feature of the present invention is to provide signal lamps at the sound-actuated devices on the cross-highway to indicate to the driver of an automobile when he may, or may not, operate the crossing signal by sounding his horn.

The invention is illustrated in the accompanying drawings, wherein,—

Fig. 1 shows the system diagrammatically with all parts in their normal position to give traffic on the main highway the right of way.

Fig. 2 illustrates the system diagrammatically with the parts in position to give a caution signal on both the main and the cross-highways.

Fig. 3 is a similar view but with the parts in position to give a stop signal on the main highway and a clear signal on the cross-highway.

Fig. 4 is a similar view showing the time relay and pendulum relay in a half-way position and about to restore the circuits and system to a normal condition with the main highway signal at clear.

Fig. 5 shows another diagrammatic view of the system with the parts in position to give a clear main-highway signal but to prevent a change to a clear cross-highway signal until after a lapse of a time interval.

Fig. 6 illustrates a form of lamp casing in perspective in order that two adjoining sides of the four sides thereof may be shown.

Fig. 7 shows a horizontal cross-sectional detail through the lamp-casing, and

Fig. 8 illustrates an arrangement of one of the sound-actuating devices and signal means on the cross-highway,—the latter to indicate to the driver of a vehicle on the cross-highway when he may not actuate the signal by sounding his horn.

Referring to Fig. 1 of the drawing wherein the complete system is shown diagrammatically in what I term its normal condition,—that is, with the signal for the main highway at clear (green) and the signal for the cross-highway at stop (red),—the numerals 9 and 10 designate the two lines for the supply and return of current from and to a source of electric current; 11, a vibrating relay; 12, a time-reset relay; 13, a pendulum time relay and 14, a neutral or signal-circuit relay, all as shown in my said pending application for patent.

As the improved system is designed to control traffic at highway intersections, the numeral 15 designates the main highway and 16 the cross-highway.

At this highway intersection a signal-lamp casing 17, is preferably suspended thereover, and this casing, as shown in Figs. 6 and 7, has four sides or faces 18, 19, 20 and 21, as shown in Fig. 7 of the drawing,—the opposite sides or faces 18 and 20 facing the main highway 15 while the other two opposite sides 19 and 21 face the cross-highway 16.

Each face of the lamp-casing carries three lenses, but the arrangement of the lenses in adjacent sides different somewhat in that on the sides 18 and 20, facing the main highway, the lenses 22, 23 and 24 are arranged in a vertical row,—the upper lens 22 being green; the intermediate lens 23 being yellow and the lower lens 24 being red in color.

On the two opposite sides 19 and 21, which face the cross-highway 16, the green lens 22 is lowermost; the yellow lens 23 is intermediate and the red lens 24 is uppermost.

In practice, there are three compartments in the signal case in different vertical planes and a lamp is located in each compartment so that if the lamp in the upper compartment is illuminated, it will illuminate both green lenses 22 facing the main-highway and both red lenses 24 which face the cross-highway, thereby producing a clear (green) signal for traffic on the main highway and a stop (red) signal for traffic on the cross-highway.

When the lamp in the intermediate compartment is illuminated, it will illuminate four caution (yellow) lenses 23 on all four sides of the lamp-casing to warn traffic in both highways that a change in signals is about to take pace.

When the lamp in the lower compartment is illuminated, it will illuminate the two lower green lenses 22 facing the cross-highway and the two red lenses 24 facing the main highway, thereby stopping traffic on the main highway and giving the right of way to traffic on the cross-highway.

Signal lamps of this kind are now in use but as far as I am aware, they are either actuated or controlled manually or are operated at predetermined or fixed intervals of time, whereas in accordance with my invention, I propose to actuate the signals only when traffic on the cross-highway 16 is present or adjacent to the main highway, and then only after a caution signal has first been given the traffic on both highways.

In further carrying out my invention, I make use of sound-actuated vibrators 25 and 26 which I mount on posts, or in any suitable manner, on the cross highway 16 at points where they will be passed by automobiles approaching the main highway, and each vibrator is preferably hooded or encased so that an open end of each case will face in a direction away from the main-highway.

Thus, in practice, the vibrator 25 will be located on the cross-highway at one side of the main-highway so as to be actuated as vehicles are approaching the main highway while the vibrator 26 will be located on the cross-highway at the opposite side of the main highway.

The vibrators which I have used in actual operation are substantially like the transmitters of telephones with diaphragms therein and as there is nothing novel in the structure, I deem it unnecessary to illustrate the same in detail.

The vibrating relay 11, which I have used in practice, consists of a permanent horseshoe magnet 27 enclosed by the coils of an electro-magnet 28. A thin metal diaphragm 29 serves as an armature or vibrator and this disk has a central contact point 30 on its under side.

The vibrator disk is sustained around its periphery by suitable brackets 31, which latter however permit the disk to vibrate.

Beneath the vibrating-disk 29 the casing of the relay 11, carries a contact-post 32, and a lever 33, is pivotally carried by this post so as to normally extend horizontally beneath the vibrating-disk.

This lever 33 is provided with a central contact 34 and also has an adjustable counterbalance weight 35, so the lever may be balanced with its contact 34 pressing upwardly against the contact 30 on the bottom of the vibrator-disk.

In practice, the vibrations of the disk 29, set up sufficient vibration in the lever 33 to cause the contacts 34 and 30 to separate intermittently and to momentarily interrupt the passage of current through those points, as will presently more fully appear.

The time reset relay 12, is merely shown diagrammatically but may be of any of the well-known structures which, when its armatures are dropped, will set in motion a motor therein which must operate through a cycle or predetermined time before it will reset those armatures.

Such a structure is disclosed in U. S. Patent 1,638,793 granted to me August 9, 1927.

In the present disclosure, however, the time-reset relay is shown with an electromagnet 36 and three armatures 37, 38 and 39, all controlled or held up by said magnet.

These armatures 37, 38 and 39 are presumed, in this instance, to have their pivot-ends enter the casing 12, where the time actuating mechanism therein will, upon the dropping of the armatures, begin a cycle of operation which consumes a predetermined period of time, and as this cycle of operation is completed, the armatures will be restored so that the magnet 36, which has again become energized, may hold the lifted armatures up.

Associated with the armature 37 is a back contact 40 which has a connection 41 to the current-supply binding-post 42 of the time-actuating mechanism within the case 12.

The armature 38 coacts with a front con-

tact 43 when held up and engages a back contact 44 when dropped, and armature 39, when up, engages a front contact 45, and when down, engages a back contact 46.

The time-reset relay 12 also has a binding-post 47, to which a return or ground-wire 48 is connected.

The pendulum-relay 13 also has a time element feature to it in that it employs an electro-magnet 49 with which a swinging pendulum-bar 50 coacts,—the pendulum-bar being balanced by means of an adjustable weight 51 on its upper end above the pivot-connection with the bracket-bars 52.

This pendulum-bar carries a thin spring-plate 53 at one side which serves as a contact-plate and which is compressed against a stationary contact-plate 54, when the magnet 49 draws the lower free end of the pendulum-bar against its core, so that when the magnet is momentarily deenergized, the spring-plate 53 will drive the pendulum away from the magnet and swing it well over to the right. The pendulum-bar 50 is so nicely balanced that its swinging movement, first away from the magnet 49 and then back again is retarded or slow.

The pendulum-relay 13 is controlled through the time-reset relay and its magnet 49 is deenergized and the pendulum swung, each time the armature 38 of the time-reset relay 12, moves between the front and back contacts 43 and 44, as will presently be more fully explained.

The neutral or signal-circuit relay 14, is controlled and actuated each time the pendulum-relay is operated, and this neutral relay has an electro-magnet 55, and three armatures 56, 57 and 58 respectively.

In addition to the mechanisms hereinbefore described, I also make use of a battery 59 in the signal system, which battery supplies the necessary current for the sound vibrators 25 and 26; an induced current for the vibrator 11; current for the time-reset relay 12; current for the pendulum-relay 13 and the current utilized by the neutral or signal-circuit relay 14.

The current however which is utilized by the signal lamps in the highway signal lamp casing 17 is supplied from the A. C. current-supply lines 9 and 10 but is controlled through armatures of the time-reset relay 12 and the neutral or signal-circuit relay 14.

Circuit between battery and highway vibrators.

From battery 59, there is a wire or line 60, 61 which leads to and connects with the highway vibrator 26, with a branch line 62 which connects highway vibrator 25.

From highway vibrator 26, there is a return line 63, which returns to the battery and is shown connected to the ground wire 64 of the battery.

A branch return line 65, from highway vibrator 25, is also provided which return branch is connected to the return line 63.

It will thus be seen that the highway vibrators are directly connected up with the battery 59.

Induced current circuit for vibrating relay.

The vibrating relay 11, has a loop line 66, 67 in which an induced vibrating current is set up through the coils 68 and 69 between the loop and the line 61 between the battery and the highway vibrators so that the disk or diaphragm 29 of the vibrating relay will vibrate as the result of the impulses received at the electromagnet 28.

The vibrations of this diaphragm or disk 29 cause the contacts 30 and 34 to vibrate, and in fact in practice the vibrations at these contacts is very fast, so that the contact between the points 30 and 34, is made and broken numerous times while the highway vibrators 25 or 26 are operating.

Normally, a circuit is maintained from the battery to the vibrating-relay disk 29; then through the contacts 30 and 34 to maintain the time-reset relay so that any interruption of that circuit by the vibration of said contacts 30 and 34 will deenergize the time-reset relay.

Circuit to control time-reset relay.

The time-reset relay 12 is controlled by current from battery 59, through the disk 29 of the vibrating relay 11, and when said disk is at rest, a circuit is maintained as follows:

From battery 59 by wires 60, and 70 to the disk 29; then through contacts 30 and 34 to and through lever 33; then by contact post 32 to and through wire 71 to electro-magnet 36 of the time-reset relay 12 and return to battery by ground connections 72 and 64.

It will also be understood that as long as armature 37 of the time-reset relay is held up, the resetting mechanism in the case 12 will remain at rest because current for operating this mechanism is supplied only when said armature 37 is dropped and in engagement with its back contact 40.

Circuit to control pendulum time relay.

The pendulum time relay 13, is also maintained by current from battery 59 but is controlled by armature 38 of the time-reset relay and the front and back contacts 43 and 44 of said armature.

The electro-magnet 49 of the pendulum-relay is deenergized only while the armature 38 of the time-reset relay is moving between its front and back contacts 43 and 44 either when it is dropping or is picking up, so that the periods of deenergization of this magnet 49 are very brief, but are sufficient to permit the pendulum-bar 50 to be released and begin its swing away from the magnet.

The circuit for maintaining this magnet 49

of the pendulum-relay, starting from battery 59 is as follows:

From battery 59 by wires 60 and 70 to branch wire 73; then by either front or back contacts 43 or 44 to armature 38; then by wire 74 and branch 75 to pendulum-relay magnet 49 and return by grounds 76 and 64 to the battery.

Obviously, if armature 38 is out of engagement with both its front and back contacts 43 and 44, current from the battery cannot pass to the pendulum-relay magnet 49 and the latter at that moment will be deenergized.

Current for neutral or signal-circuit relay.

The neutral or signal-circuit relay 14 and its magnet 55 is controlled through the pendulum-bar 50 of the pendulum-relay 13, and is energized as long as the contact 53 on the pendulum-bar is in engagement with the stationary contact 54. This means that magnet 49 of the pendulum-relay must be energized, and while and as long as it is energized, the magnet 55 of the neutral or signal-circuit relay will be energized.

The circuit therefore for maintaining the neutral relay from the battery is the same which maintains magnet 49 up to and including wire 74 but is then continued by brackets 52, pendulum-bar 50, contacts 53 and 54; then by wire 77 to neutral relay magnet 55 and by ground connections 78 and 64 back to the battery.

Circuit for operating time-relay resetting mechanism.

The time-relay resetting mechanism is normally idle because its function is merely to pick up and restore the armatures 37, 38 and 39 after they have been dropped by the deenergization of electro-magnet 36, but to do so only after a predetermined time-limit.

The electro-magnet 36 will be deenergized by the vibrations set up at the disk 29 and as soon as that disk ceases to vibrate, the time-reset relay will again become energized but the armatures 37, 38 and 39 will have dropped beyond the influence of the magnet to again pick them up until the resetting mechanism in case 12 lifts them.

The circuit therefore from the battery 59 to start the resetting mechanism is as follows:

From battery 59 by wires 60 and 70 to branch wire 79; to and through armature 37, which is then down and engaging its back contact 40 in Fig. 2 of the drawing; then by said back contact 40 and wire 41 to post 42 to start the reset mechanism into operation, and return to battery from post 47 and ground connections 48 and 64.

Highway lamp circuits.

In the diagrammatic views of Figs. 1, 2, 3, 4 and 5 three lenses 22, 23 and 24 are shown, and these lenses are presumed to be those which control traffic on the cross-highway 16,—the lower lens 22 being red; the intermediate lens 23 being yellow and the upper lens 24 being red.

As hereinbefore explained, when the green lens for the cross-highway is illuminated, a red lens (on the opposite right angle sides of the lamp case) for the main-highway will be illuminated.

When a red lens 22 for the cross-highway is illuminated, a green lens for the main-highway will be illuminated, and when the signal is about to be changed from stop on the one and clear or go on the other highway, yellow lenses 23 on all four sides of the lamp will be illuminated.

When therefore, the color of the lens illuminated is herein referred to as green or red this is to be taken as meaning the lens which controls the traffic on the cross-highway, it being understood that an opposite condition prevails for the signal on the main highway, but in all cases where a yellow light is displayed, this color is shown on both highways because it indicates a change is about to be made in the signals.

The signal circuits are all controlled through the armatures 56, 57 or 58 of the neutral or signal-circuit relay 14 and the connections between these armatures and the several lamps will now be briefly explained.

Normal red lens signal circuit for cross-highway.

From the lamp in the (cross-highway), red lens compartment 22, there is a wire 80 which leads to a front contact 81, with which armature 57 of the neutral or signal circuit relay 14 normally engages while from that armature 57, there is a wire 82 which extends back to front contact 45, of armature 39 of the time reset relay 12. A wire 83, then extends from the armature 39 and connects with the main line 9 of the main current supply (110 V. A. C.).

Thus current is taken from the main line 9; passed through armature 39 of time relay 12, then by wire 82 to and through armature 57 of neutral or signal circuit relay; then by wire 80 to lamp 22 which normally illuminates the red stop lens 22 for the cross-highway, and finally from the lamp by common ground connections 84—85 back to the return wire 10 of the source of current supply.

The circuit just traced is a normal cross-highway circuit and may readily be followed in Fig. 1 of the drawing by the darts placed along the entire circuit.

Obviously, this normal circuit to the lamp behind red lens 22 for the cross-highway will not only illluminate said red lens but will also illuminate the two green lenses for the main highway.

The circuits to the lamps for the yellow and

green cross-highway lenses are normally broken, the yellow lamp circuit being interrupted at armature 58 while the green lamp circuit for the cross-highway is interrupted at the back contact 46 of armature 39 of the time reset relay 12.

Under normal operating conditions, the red lenses 22 for the cross-highway 16 are illuminated while at the same time the green lenses 24 for the main highway 15 are illuminated so that the main highway traffic has the right of way normally.

Under these conditions three complete circuits are provided,—one for the lamp circuit just above described from line 9 as shown by the darts in Fig. 1, and another from the battery 59 through armature 38 of time reset relay 12 so as to keep the pendulum relay, and the neutral relay energized. This latter battery-circuit is also shown by darts from the battery by wires 60, 70, 73, 74, 75 and 77 in Fig. 1, and a third circuit from the battery through the disk 29 of vibrating relay 11 and contacts 30 and 34 and wire 71 to time reset relay 12. This circuit also being shown by darts in Fig. 1.

Caution circuits for both highways.

Presuming now that a vehicle on the cross-highway 16, desires to cross or enter the main highway and therefore sounds a horn.

The sound of the horn will set up vibrations of a diaphragm in one of the highway vibrators 25 or 26, which vibrations will immediately be transmitted by impulses in the current at the vibrating relay 11. Immediately this takes place, the lever 33 of vibrating relay will move sufficiently to separate contacts 30 and 34, and a change in all the circuits takes place, as is shown in Fig. 2 of the drawing.

This change of contacts 30, 34 causes relay magnet 36 of time reset relay to become deenergized and drop its armatures and while armature 38 thereof is dropping the magnet 49 of pendulum-relay 13 is momentarily deengized and pendulum-bar 50 swings away so as to cut off current to neutral or signal circuit magnet 55.

When the neutral relay 14 is thue deenergized, its armatures 56, 57 and 58 will drop, and in doing so, armature 58 will engage a back contact 86, and will remain in engagement with that contact until pendulum-bar 50, returns to and is held by magnet 49 of the pendulum-relay.

Therefore, while pendulum-bar 50 is swinging away from and then returning to the magnet 49, (which is a slow movement because of the delicate balance of the bar) the neutral relay magnet 55 remains deenergized and armature 58 thereof maintains engagement with back contact 86, as shown in Fig. 2.

At this moment, the caution or yellow lenses 23 will be illuminated for both the main and cross-highways and the lamp circuit will then be as shown in Fig. 2 as follows:

From main line 9 by wire 83 and branch wire 87 to armature 58 of neutral relay, then through contact 86 and wire 88 to lamp which illuminates all four yellow lenses 23 and return by common ground connections 84 and 85.

While the yellow lenses are illuminated, and pendulum-bar 50 is still away from magnet 49, a circuit is at once formed through the time reset relay-mechanism to start the latter through its cycle of operation.

This circuit, as shown in Fig. 2, is as follows:

From battery 59, by wires 60, 70 and 79 to armature 37 and back-contact 40 and wire 41 to post 42 to start the reset mechanism and return by ground connections 48 and 64 to battery.

While this is going on however, and before the time reset relay actually picks up its armatures 37, 38 and 39, a change takes place in the signals, from yellow to green for the cross-highway.

This change from yellow to green for the cross-highway, and from yellow to red for the main highway, is brought about when the pendulum-bar 50 returns to the pendulum-relay magnet 49, but the time-relay armatures 37, 38 and 39 are still down, so that a yellow light is being displayed.

Pendulum-relay magnet 49 must be energized when pendulum-bar 50 returns thereto, and in fact is energized as soon as armature 38 engages its back contact 44. In other words, pendulum relay magnet 49 is only deenergized while armature 38 is dropping from its front contact 43 to its back contact 44, but this time interval is sufficient to permit pendulum relay magnet 49 to become deenergized and to release the pendulum-bar.

Then as soon as time relay armature 38 engages its back contact 44, pendulum-relay magnet 49 will again be energized, although the pendulum-bar 50 is still away from the magnet.

This circut is also shown in Fig. 2, as follows:

From battery 59, by wires 60, 70, 73 and back-contact 44 to and through armature 38 then by wire 74 and 75 to pendulum-relay magnet 49 to energize the latter and return by ground connections 76 and 64 to battery.

The yellow light will thus be displayed until pendulum-bar 50 returns to its holding magnet 49 and then the signal circuit will be shifted to display a green (clear) signal for the cross-highway and a red (stop) signal for the main highway.

This change from yellow to green for the cross-highway is brought about by the neutral relay 14 picking up its armatures while the armatures 37, 38 and 39 of the time-reset

relay are still down, although the time reset mechanism is going through its operation.

This change to a green signal for the cross-highway is shown in Fig. 3 to which attention is now directed.

The pendulum-bar 50 has now returned to and is held by magnet 49 and its contact plate 53, closes a circuit from the line 74 through contact 54 and wire 77 to and through neutral magnet 55 which now has picked up its armatures 56, 57 and 58 and in picking up armature 58 has cut out the circuit through wire 88 to the yellow caution signal and at the same time closed another circuit through its armature 56 to the lamp behind the green lens 24 of the cross-highway 16 and the red lens of the main highway.

This circuit (green for cross-highway) is from the main current supply as follows:

From line 9 by wire 83 to armature 39 of time-reset relay 12, which is still down, its back contact 46, wire 89 to armature 56 of neutral relay 14 which is now up; through said armature 56 to and through wire 90 to the lamp of the green lens 24 for the cross-highway and the red lens for the main highway, thus giving traffic on the cross-highway the right of way over that on the main highway.

The return from the lamp is by connections 84 and 85.

The green light display for the cross-highway 16 will now remain until the time-reset relay mechanism has completed its cycle of operation and begins to lift the armatures 37, 38 and 39.

The circuits again change to display yellow signals on both highways as shown in Fig. 4, which latter shows the armatures partly but sufficiently raised for the time reset relay magnet 36, to pick them up and Fig. 4 therefore shows the parts between the two points in this operation.

As soon as armature 39 is lifted from its back contact 46 the circuit to the green cross-highway signal will be broken, and as soon as armature 38 is lifted from its back-contact 44, pendulum relay-magnet 49 will again be de-energized and pendulum-bar 50 will again swing away and separate the contacts 53 and 54, thereby interrupting the circuit through wire 77 to neutral relay magnet 55.

When neutral relay magnet 55 is again de-energized its armatures 56, 57 and 58 will drop and armature 58 will again engage contact 86 and close the light circuit from line 9 through wires 83 and 87 to and through armature 58 and wire 88 to the yellow lamp, thereby again giving a yellow caution signal on both cross and main-highways.

This light condition remains although time reset relay fully and immediately picks up, because the yellow light circuit will not be interrupted until neutral relay magnet 55 becomes energized and this cannot take place until pendulum-bar 50 swings back and is again held by magnet 49 so as to close contacts 53 and 54.

The pendulum-relay therefore serves to hold the circuit to the neutral relay 14 open and to determine the length of time that the yellow signal will be given, either when the signal changes from green to yellow to red, or red to yellow to green.

Upon return of the pendulum-relay after the parts are in the positions shown in Fig. 4, the neutral relay 14 will pick up its armatures and the normal signals will be restored with the cross highway signal 24 red and the main highway signal green.

All of the structures and operations hereinbefore described are disclosed in my said pending application and I have now added to those structures certain other devices which are disclosed in the present application and to which reference will now be made.

In Fig. 4 of the drawing, the structures are shown in positions with the circuits completed for displaying caution (yellow) signals for both the main and cross-highways and the time reset relay 12 is picking up its armatures 37, 38 and 39 and about to restore the normal clear (green) signal for the main highway and a stop (red) signal for the cross-highway.

At this moment, unless means be provided to prevent it, the sounding of a horn on the cross-highway will again and immediately actuate the vibrators and separate the contacts 30 and 34 of the vibrating relay 11, and again deenergize magnet 36 of the time reset relay 12 and immediately repeat the caution and clear signal circuits for the cross-highway without giving traffic on the main-highway a chance to move.

Or it may be, that the main-highway signal has just cleared and only one or two of a series of automobiles held on the main highway have passed over the crossing, when a horn on the cross-highway will actuate the vibrating devices and effect a change in the signals without giving traffic on the main highway a fair chance to move.

I have therefore provided, in the present application, an improved means to prevent this repeating of the clear cross-highway signal until after the lapse of a predetermined time interval, as will now be explained.

In carrying out this part of the invention I make use of a second time-relay 91, which has a time operation about twice as long as the time relay 12.

In order to distinguish these two time relays, I have elected to call this second relay 91, a prolonged-delay relay or prolonged relay, and, in this way, readily distinguish the one from the other.

This prolonged-relay 91 has an electromagnet 92, and a series of armatures 93, 94

and 95 and while I have shown the same diagrammatically, it is presumed to contain in its casing, a motor which, when a circuit is closed therethrough, will, after a prolonged period of time, pick up its armatures 93, 94 and 95, where they will be held by the core of the magnet.

In practice, the prolonged relay 91, and the time relay 12 are both operated at the same time to drop their armatures and start in motion their resetting mechanism, but the time-relay 12 will pick up first and the prolonged-relay 91 will be substantially twice as long in picking up its armatures.

Therefore, when time-relay 12 picks up and restores a clear (green) signal for the main highway, the prolonged-relay 91, will not pick up until after the lapse of an additional time period and until it shall have picked up, the signals cannot again be changed, so that during this additional time period traffic on the main highway will have an undisturbed right of way, and clear signal, no matter if a horn on a vehicle on the cross-highway be sounded repeatedly during that time interval.

The prolonged-delay relay 91 is so installed as to close a bridge around the contacts 30 and 34 of the vibrating relay 11, thereby making ineffective any vibrations caused by the sound of horns, until after the additional time delay period has lapsed.

The circuit-connections for the prolonged-delay relay 91 will therefore now be described.

The electro-magnet 92 of the prolonged-relay has one side thereof connected by a wire 96 which branches from the wire 71, that supplies current to the magnet 36 of time relay 12, so that whenever magnet 36 is energized or deenergized, the same condition will prevail at electro-magnet 92 of the prolonged-relay 91.

A ground connection 97, for return of the current from magnet 92 back to the battery-ground 64 and battery 59 is provided.

Armature 93 of the prolonged relay 91 has a back contact connection with a ground wire 98, while the other end of the same armature (93) has a connection 99 with wire 79 which supplies current to the resetting mechanism of both relays 12 and 91, so that both resetting mechanisms will start their cycles of operation at the same time.

Armature 94 of the prolonged-relay 91 has a back-contact connection with a wire 100 while the opposite end of said armature (94) has a connection 101 with wire 96 so that when said armature 94 is dropped, it will close contact with wire 100 and also with wires 101 and 96, and at once a bridge circuit will be formed from battery 59 to and through the magnet 92 of prolonged-relay 91 and also to magnet 36 of time-relay 12, without regard to any vibrations that may take place at the vibrating relay 11 between the contacts 30 and 34.

This bridge circuit is as follows:

From battery 59, by wires 60, 70 and 100, to and through armature 94 of the prolonged-relay 91; then by wires 101, and 96 to the magnet 92 and its ground 97, and also by said wire 96 and 71 to magnet 36 of the time-relay 12 and its ground 72. Thus the magnet 92 of relay 91, and the magnet 36 of the relay 12 will both become energized immediately the armature 94 drops and closes with wire 100.

It is to be understood that the armatures 93, 94 and 95 of the prolonged-relay 91 drop far enough away from the core of magnet 92, to be beyond the influence of that magnet when it almost immediately thereafter becomes energized again and these armatures remain in their dropped positions until they are picked up at the end of the operation of the resetting mechanism in relay 91.

It is thus to be understood that as long as the armatures of the prolonged delay relay 91 are dropped, no matter if the armatures 37, 38 and 39 of time relay 12 have been picked up, as shown in Fig. 5, and the signal is changing or has changed to clear (green) for the main highway and stop (red) for the cross-highway, no amount of horn-blowing or vibrations at contacts 30 and 34, will again change the signals, because as long as armature 94, of prolonged-relay 91 is down, the bridge-circuit through wire 100, will keep magnet 36 of time-relay 12 energized, and another change in the signal circuits cannot take place as long as magnet 36 is kept energized.

In other words, another change in signals to clear the cross-highway can only take place when armatures 37, 38 and 39 and armatures 93, 94 and 95 are all up because the prolonged delay relay armature 94, when down, maintains the bridge circuit which renders the vibrating relay 11 ineffective.

Inasmuch as the sounding of the horn on the cross-highway will serve no useful purpose while prolonged delay relay is deenergized, I desire to provide a signal means for the driver of the automobile to advise that he cannot clear the signal on the cross-highway at that time, and to do this, I provide a signal device which is operated through the armature 95 of the prolonged delay relay 91. which will now be explained.

The sound-actuated vibrators 25 and 26 on the cross-highway, in practice, are carried on posts at the sides of the highway and on the right hand side of the road.

In Fig. 8 of the drawing, one of these posts 102 is shown with the vibrator 25, and a megaphone-like structure 103 and front hood 104 associated with the vibrator to direct the sound to the latter.

Adjacent to the megaphone structure. I provide a hooded casing 105 in which I place a signal lamp 106, and if desired, a suitable

notice can be given by sign on the front of the lamp-casing that when the lamp is illuminated, do not sound horn.

Armature 95 of prolonged-delay relay 91 has a connection by wire 107 to current supply wire 9 of the 110 volt A. C. line. The front end of said armature 95 when down, closes a connection with a wire 108 which latter leads to the two signal lamps 106 and then has a ground or return connection 109.

Thus it will be seen that as long as the prolonged-delay relay 91 is deenergized and its armatures are down, one of these armatures 95 will close a light circuit through the signal lamps and keep those lamps illuminated as long as the prolonged delay relay 91 is deenergized and as long as the sounding of the horn will be ineffective to change the signals.

When the relay 91 resets the armatures 93, 94, and 95, the signal will, of course, be cut off.

Of course it is obvious that the signal might indicate when to blow the horn instead of when not to blow it, the only difference being that armature 95 would make contact with wire 108 when it is up instead of when it is down.

Having described my invention, I claim,—

1. In an automatic signal mechanism for highway intersections the combination with a visual signal means at the intersection to provide a normal clear signal for a main highway while showing a normal stop signal for an intersecting cross-highway, to also provide for simultaneous caution signals for both highways and to further provide for a time limit stop signal for the main highway while giving a time limit clear-signal for the cross-highway, of a current supply for the signal mechanism, signal-circuit switches connected to the signal mechanism to control the current to said signal mechanism, means connecting the signal circuit switches with the signal current-supply, a sound-operated element adjacent to the cross-highway, translating means actuated by the sound operated element, timing means,—said timing means being set in operation through the said translating means, means responsive to the timing means for operating the signal circuit switches to progressively change the signals on each highway from normal to caution to the opposite from normal for a limited period of time and then back to caution and again to normal and means to prevent a second progressive operation of the signals upon the return of the same to normal until after another period of time.

2. In an automatic signal mechanism for highway intersections the combination with visual signal means at the intersection to provide a clear signal for a main highway while showing a stop signal for the intersecting cross-highway, to provide for simultaneous caution signals for both highways and to provide for a stop signal for the main highway while showing a clear signal for the cross-highway, of a current-supply for said signal mechanism, a signal circuit relay and connections to control the current to said signal mechanism, a sound-operated element adjacent to the cross-highway, a time reset relay, translating means between the sound-operated element and the time reset relay for operating the latter upon the actuation of the sound element,—said time reset relay having means through which the signal circuit relay is controlled, means operating between the time rest relay and the signal circuit relay to cause the latter to change the signals progressively first, from clear and stop for the main and cross-highways respectively to caution signals for both highways, second to again change the circuits to produce a stop signal for the main and a clear signal for the cross highways, third to again change the circuits to produce a caution signal for both highways and fourth to again change the circuits to produce a clear signal for the main and a stop signal for the cross-highways and means to prevent a second progressive operation to repeat the signal indications until after the normal signal indications have been restored and continued for a period of time.

3. In an automatic signal mechanism for highway intersections the combination with visual signal means at the intersection to provide clear, caution and stop indications for a main-highway and stop, caution and clear indications for an intersecting cross-highway, a signal current-supply, signal-circuit control devices to control the signal means, a sound-operated element adjacent to the cross-highway, means for actuating the said control devices at time intervals to change each set of signals progressively through its several indications and back to normal, means actuated by the sound-operated element to start the time interval means through a cycle of operations and means to prevent a repetition of the operation of the said time interval means for a predetermined period of time after its one cycle of operations.

4. In an automatic highway crossing signal mechanism the combination with a visual signal means to simultaneously provide a clear signal for a main highway and a stop signal for a cross-highway and to simultaneously provide a stop signal for the main highway and a clear signal for the cross-highway, of a current supply for the signal mechanism, signal-circuit switch devices and connections forming a normal circuit through which the current from the current-supply is lead to the signal mechanism to produce a normal clear signal for the main and a normal stop signal for the intersecting highway, means including a timing mechanism which when operated will move the signal-circuit

switch-devices in such an order as to cause them to shift the current and change the signals from clear and stop indication for the main and cross-highways respectively to stop and clear for said highways, and after a delay restore the circuits to their normal condition, a sound-actuated element on one of said highways, means operated by the sound-actuated element for effecting an operation of the means which first moves the said switch devices and means to prevent a clear signal for the cross-highway beyond its normal time limit until after a clear signal indication for the main highway has been restored and maintained for a period of time.

5. In an automatic highway crossing signal mechanism the combination with a visual signal means to provide clear, caution and stop signals for a main highway and stop, caution and clear signals for a cross-highway, of a sound actuated element on the cross-highway, a signal current supply, connections and movable switch devices between the signal current supply and the signal mechanism timing means to control the movement of said switch devices through a single cycle of operations to progressively change the signals at predetermined time intervals and restore them to a normal condition, means operated by the sound-actuated element to start the timing means on a cycle of operation and means to prevent a second operation of the timing means to continue a clear signal for the cross-highway until after the signal mechanism has been restored to a normal condition for a period of time.

6. In an automatic signal mechanism for highway intersections the combination with a visual signal mechanism at the intersection normally to provide a clear indication for a main highway while giving a stop indication for an intersecting highway and another normally inactive signal to provide a stop indication for a main highway while giving a clear indication for the intersecting highway, of a signal current supply, a signal circuit switch for each signal, circuit connections between the signal current supply and the signal circuit switches, circuit connections between the signal circuit switches and the signal mechanism, a sound-operated element on the intersecting highway, a translating means actuated by the sound-operated element, timing means controlled by the translating means for actuating the signal-circuit switches to energize the normally inactive signal and deenergize the normally active signal for a predetermined time and restore the signals to normal and means to compel the signals to remain at normal form a period of time after each operation before another change in their indications can take place.

7. In an automatic signal mechanism for highway intersections the combination with visual signal means at the intersection to provide clear and stop indications for the main highway and stop and clear indications for an intersecting highway, a signal current-supply, signal-circuit control devices to control the signal means, a sound-operated element adjacent to the intersecting highway, a timing means for actuating the said control devices to change the signal means to produce a stop indication on the main highway and a clear indication on the intersecting highway for a period of time and then again operate the control devices to restore the signal indications on the two highways to normal, translating means actuated by the sound-operated element to start the said timing means, a second timing-means having a greater period of operation than the first timing means and normally controlled and set into operation by the said translating means, and means and connections including the second timing-means and the said first-named timing means to prevent a second operation of the first named timing means until the second timing-means has completed its cycle of operation whereby to prevent a repetition of the stop indication for the main and clear indication for the intersecting highways until the second timing-means has completed its cycle of operation.

In testimony whereof I affix my signature.

CHARLES ADLER, JR.