Dec. 29, 1964 M. WOOLMAN 3,162,959

LIGHT TRANSMISSION INTELLIGENCE DISPLAYING AND RESPONSE RECORDING MACHINE

Filed Dec. 2, 1960 7 Sheets-Sheet 1

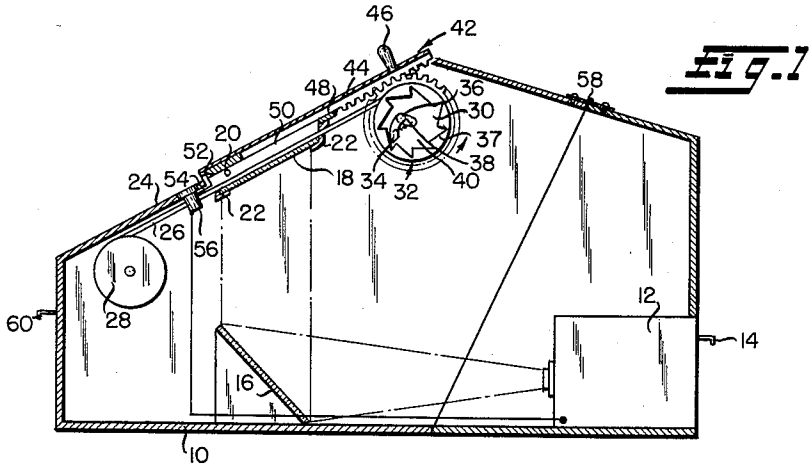

Fig. 1

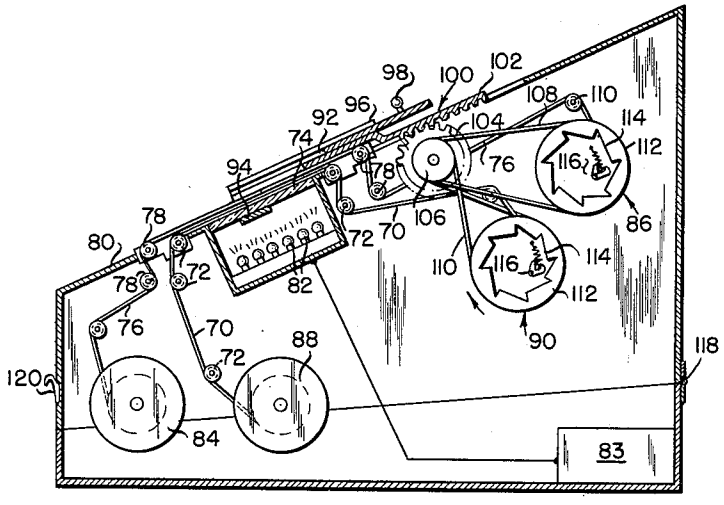

Fig. 2

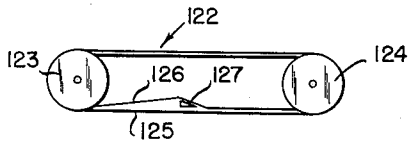

Fig. 2A

INVENTOR
Myron Woolman, PhD

BY Shlesinger & Shlesinger
ATTORNEY

Dec. 29, 1964 M. WOOLMAN 3,162,959

LIGHT TRANSMISSION INTELLIGENCE DISPLAYING AND RESPONSE RECORDING MACHINE

Filed Dec. 2, 1960 7 Sheets-Sheet 2

Fig. 7A

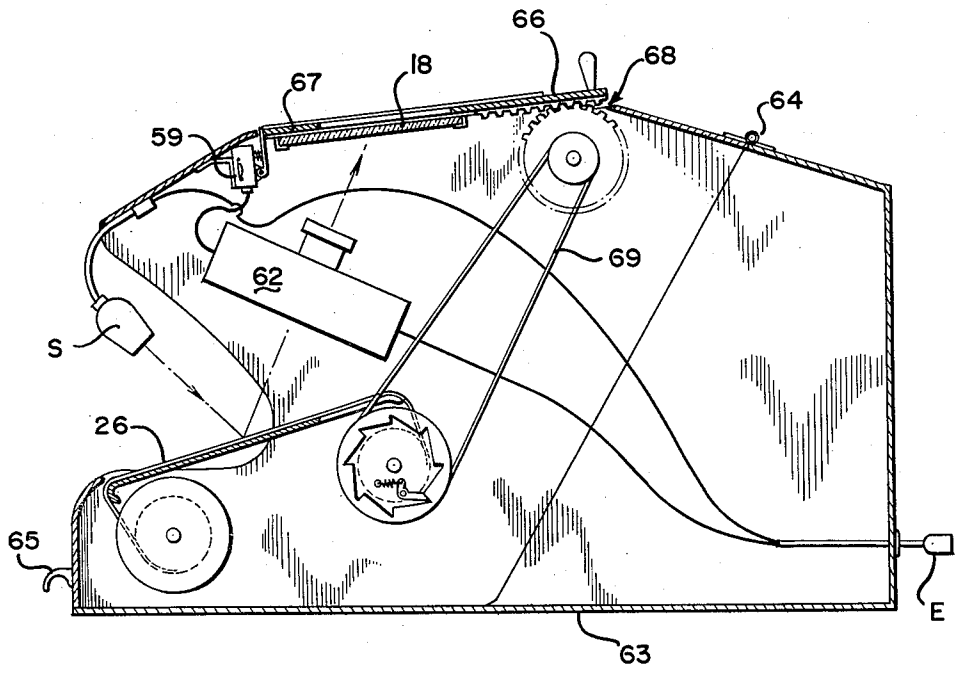

INVENTOR

Myron Woolman, PhD

BY

ATTORNEY

Dec. 29, 1964 M. WOOLMAN 3,162,959

LIGHT TRANSMISSION INTELLIGENCE DISPLAYING AND RESPONSE RECORDING MACHINE

Filed Dec. 2, 1960 7 Sheets-Sheet 3

Fig. 3

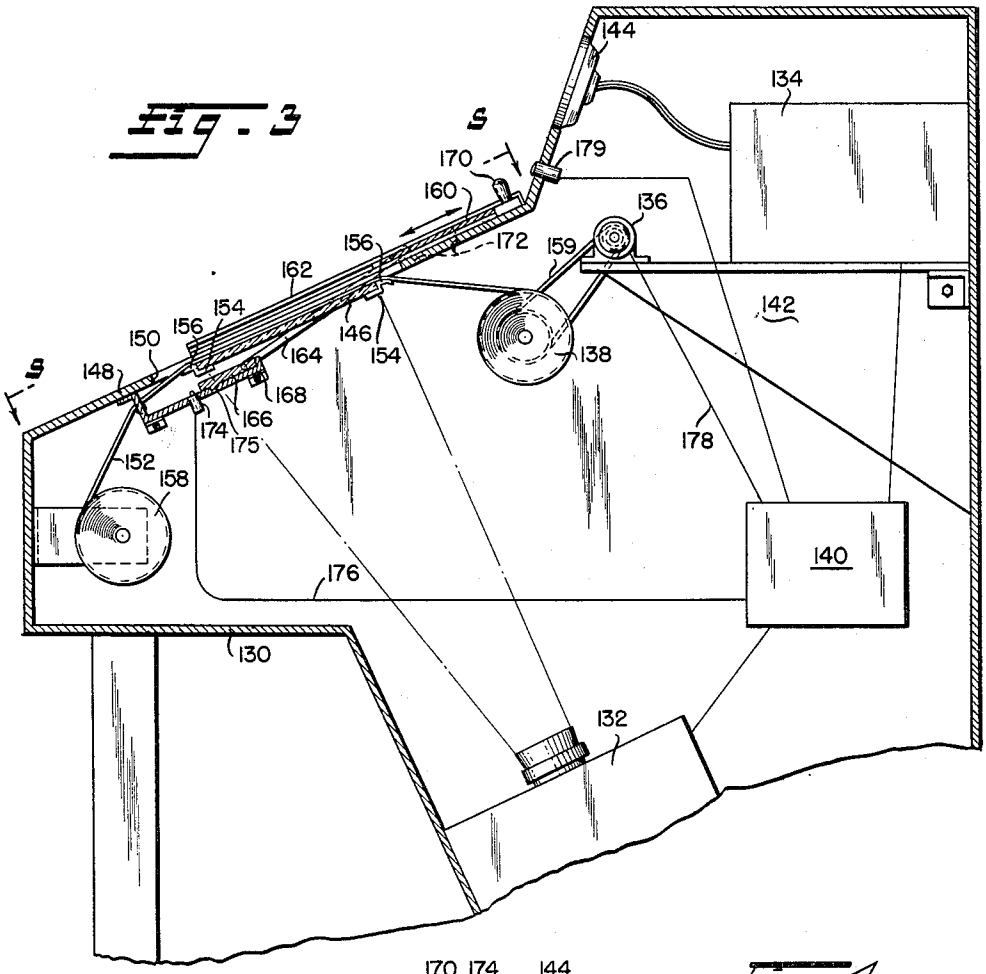

Fig. 4

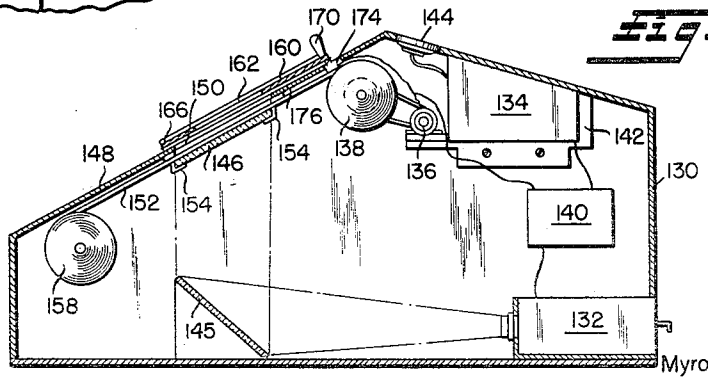

INVENTOR
Myron Woolman, Ph.D.

BY Shlesinger & Shlesinger

ATTORNEY

Dec. 29, 1964 M. WOOLMAN 3,162,959

LIGHT TRANSMISSION INTELLIGENCE DISPLAYING AND RESPONSE RECORDING MACHINE

Filed Dec. 2, 1960 7 Sheets-Sheet 4

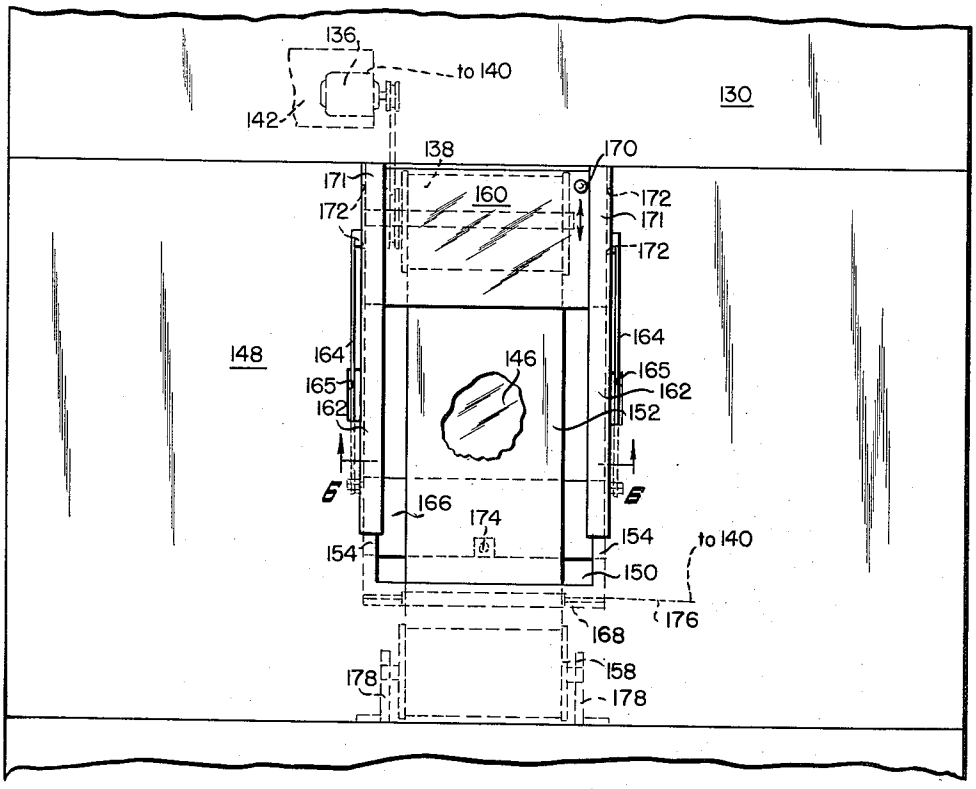

Fig. 5

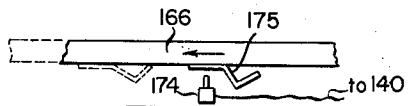

Fig. 5A

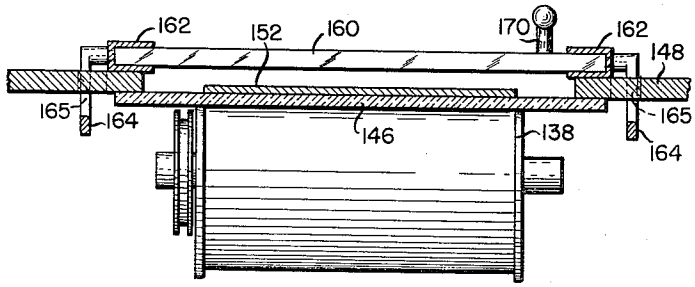

Fig. 6

INVENTOR
Myron Woolman, Ph.D

BY Shlesinger & Shlesinger

ATTORNEY

Dec. 29, 1964 M. WOOLMAN 3,162,959

LIGHT TRANSMISSION INTELLIGENCE DISPLAYING AND RESPONSE RECORDING MACHINE

Filed Dec. 2, 1960 7 Sheets-Sheet 5

Fig. 1

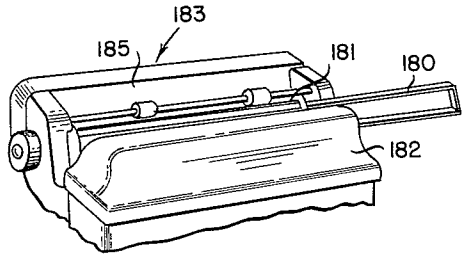

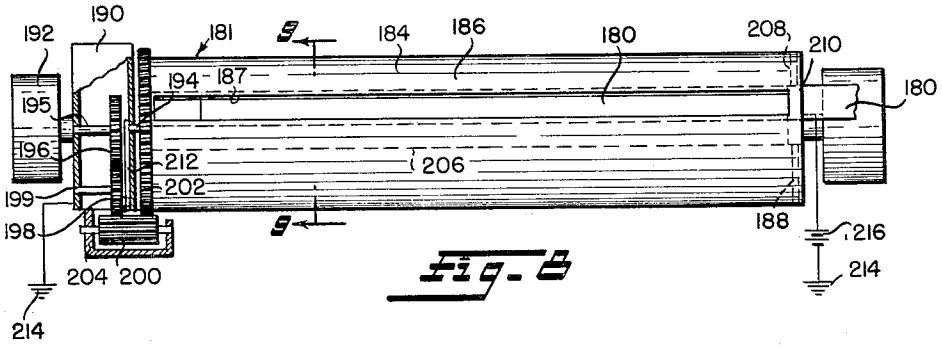

Fig. 8

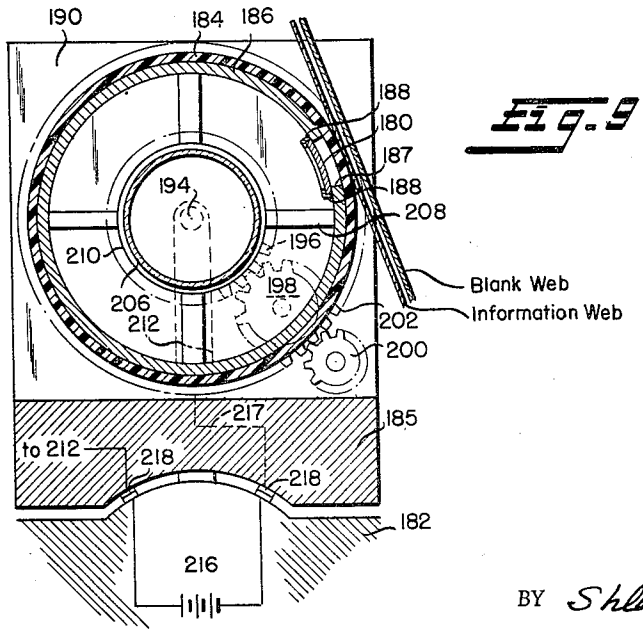

Fig. 9

Blank Web

Information Web

INVENTOR
Myron Woolman, PhD

BY Schlesinger & Schlesinger
ATTORNEY

Dec. 29, 1964 M. WOOLMAN 3,162,959

LIGHT TRANSMISSION INTELLIGENCE DISPLAYING AND RESPONSE RECORDING MACHINE

Filed Dec. 2, 1960 7 Sheets-Sheet 6

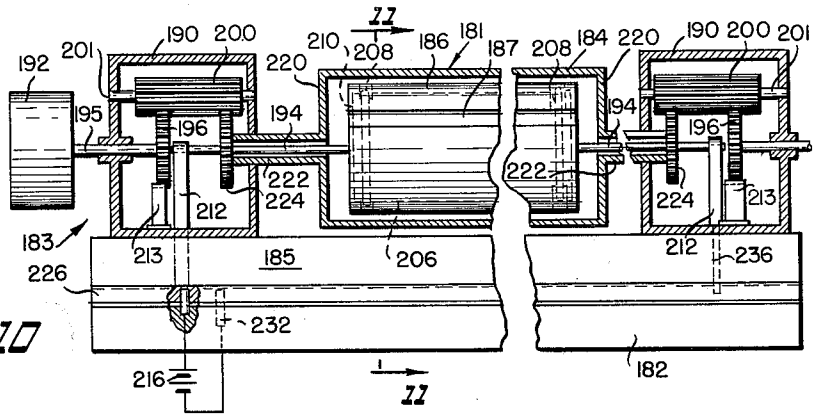

Fig. 10

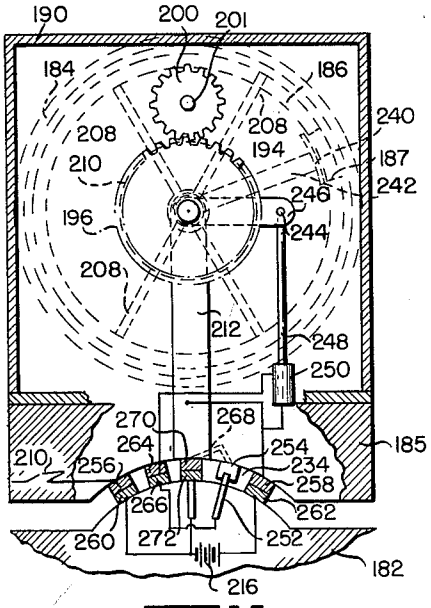

Fig. 13

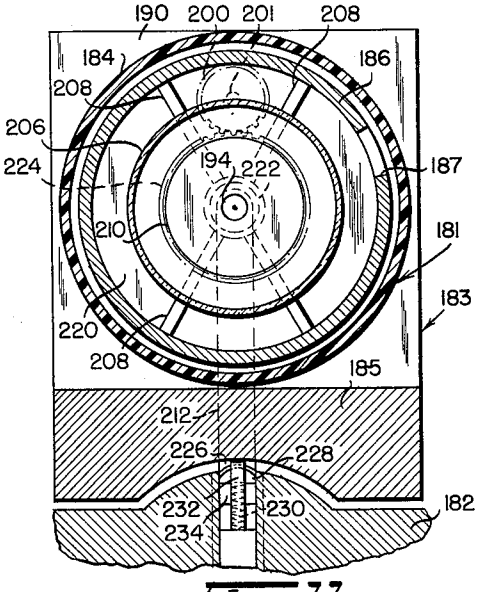

Fig. 11

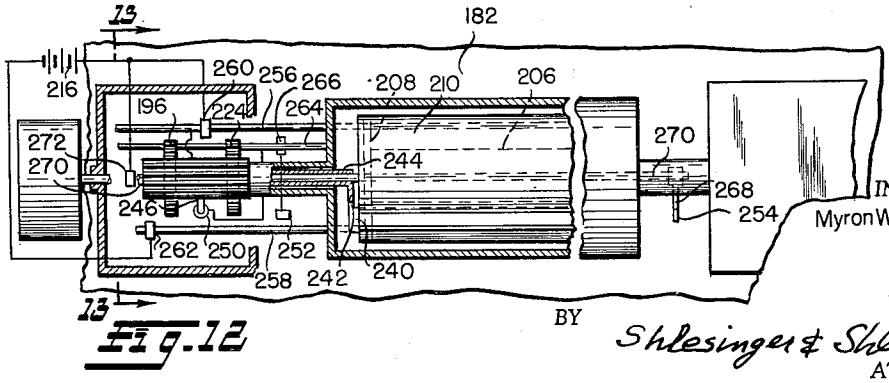

Fig. 12

INVENTOR
Myron Woolman, Ph.D

BY Shlesinger & Shlesinger
ATTORNEY

Dec. 29, 1964 M. WOOLMAN 3,162,959

LIGHT TRANSMISSION INTELLIGENCE DISPLAYING AND RESPONSE RECORDING MACHINE

Filed Dec. 2, 1960 7 Sheets-Sheet 7

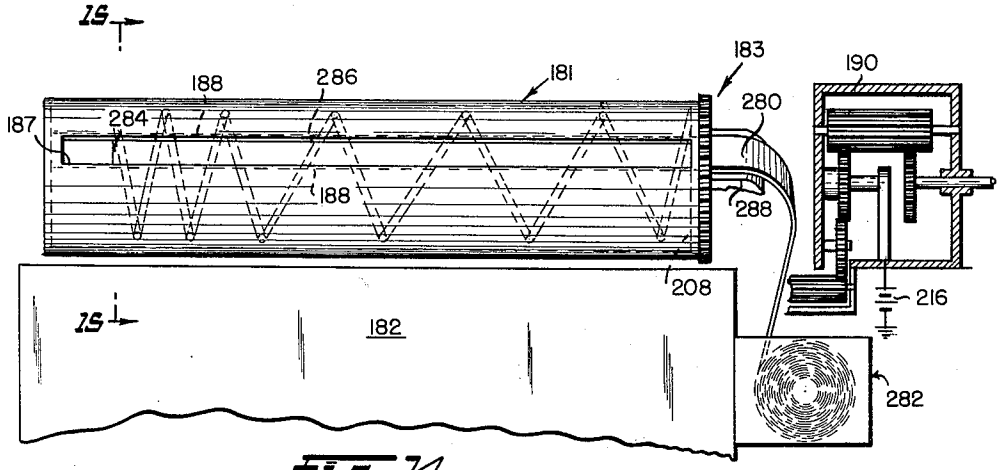

Fig. 14

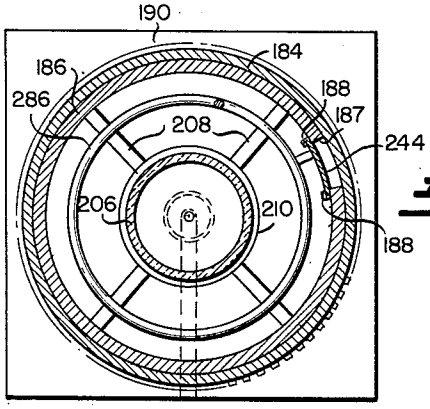

Fig. 15

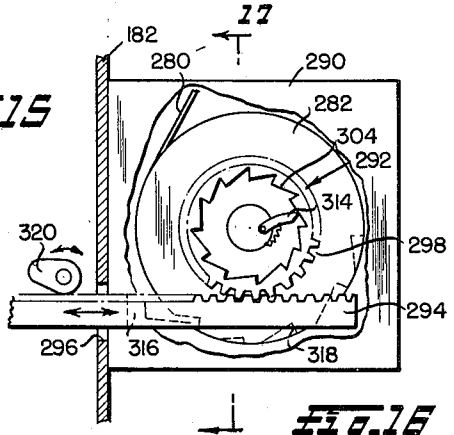

Fig. 16

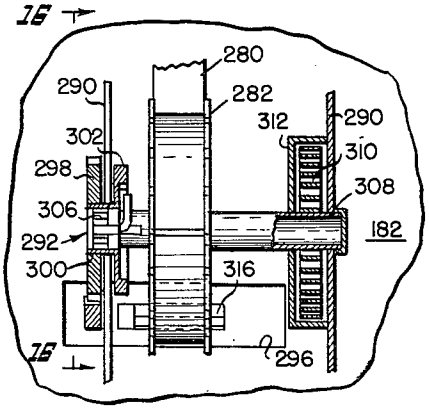

Fig. 17

INVENTOR
Myron Woolman, Ph.D

BY Shlesinger & Shlesinger

ATTORNEY

United States Patent Office 3,162,959 Patented Dec. 29, 1964

3,162,959

LIGHT TRANSMISSION INTELLIGENCE DISPLAYING AND RESPONSE RECORDING MACHINE

Myron Woolman, 2306 38th St. NW., Washington 7, D.C.

Filed Dec. 2, 1960, Ser. No. 73,296
41 Claims. (Cl. 35—9)

This invention pertains to a machine and modifications thereof for teaching by displaying a programmed sequence of intelligence or information through a light transmitting material and for recording upon a blank web of material responses of the operator of the machine for the purpose of training and education etc. The uses of this invention fall generally into the categories of teaching machines and record keeping machines.

In relation to the first use of the machine, i.e., the teaching function, it is the primary object of this invention to provide a teaching machine which is an inexpensive and simple compact unit which may be used in conjunction with properly programmed sequences of learing material to quickly teach a student learner necessary names, locations, functions and relationships within a given field of study as well as to equip him with the necessary concepts for manipulating material in that field to useful ends.

This object is accomplished by utilizing in the present machine information and interrogatory material which is so sequenced through psychological planning that the student must follow an effective learning procedure in using the machine in accordance with instructions.

Modern technology with its emphasis on technical skill requires more efficient teaching techniques. The use of machines to facilitate the learning processes promises to provide higher rates of learning, increased understanding and greater economy in the teaching of information and skills. Also, the learner is freed to learn at his own rate of speed rather than to maintain the pace set by his class or instructor. Due to the fact that individual students vary in the amount of material they can learn in a given period of time where students are grouped, as in the typical classroom, faster learners must reduce their pace, while slower learners must proceed at higher rates of speed than is best for their learning efficiency. This difficulty is overcome by the use of the present individual machines which free each student to move through the sequence of lessons at his own rate of speed providing he meets a designated performance standard such as 90% or higher on the material learned to that point.

It is, therefore, another purpose of this invention to provide a teaching machine which may be economically provided for each of the students in particular classes of study so that each student may progress through the material at a rate of learning compatible with his experience, capacity and interest. Thus, the more well endowed students will be permitted to move ahead to more advanced materials while the less well endowed students or less experienced students will have a greater opportunity to absorb learning information in relationship to their capacities, backgrounds and demonstrated competence.

It is another purpose to provide a teaching machine by which the learner's perceptual field is restricted at any one time to the amount and kind of material designed or programmed to facilitate student learning. This machine permits the presentation of learning materials in small readily digestable amounts as opposed to lecture and text book presentation which do not control the factor of the size of the perceptual field. This material is generally presented in one of two manners; presentation of information to be comprehended followed by interrogatory presentations which require the student to respond in recorded form.

In present classrooms a great part of the teaching time

is directed to the verbal presentation of information by the teacher. The students are largely passive receivers of information. In a machine teaching program each student actively responds in recorded form as much as two times each minute. Each student is successively assimilating and actively responding. As the response activity of the learner is an important determinant of learning, this process facilitates understanding of the material presented while freeing the teacher from the chore of verbalizing essentially the same information to class after class. This reduction in the chore of verbalization permits the teacher to concentrate on improving weaker students, developing new exercises and extending the range of student understanding.

It is, therefore, another object of this invention to provide a teaching device for individual student use which will free the instructors from the necessity of constant presentation of new material so as to provide the instructors with additional time and energy to assist and support the learning of individual students, particularly weaker students.

It is also a function of this invention to provide a teaching machine which will allow responses to various interrogatory stimuli to be recorded upon a blank web of writing material and then to have these responses immediately compared to the programmatically correct answer which is also integrated into the programmed sequence of interrogations so that the student has the benefit of immediately knowing whether or not his response to the question propounded in the interrogatory phase is correct or incorrect. This immediate feedback provides the opportunity to compare answers with the programmatically correct answers. Informational feedback is one of the important aforementioned determinants of the learning process and has been shown to improve learning.

In accordance with the invention the programmed sequence of information and interrogatories is recorded on photographic film or upon a re-usable web of paper or like material. This intelligence is transmitted by a light source onto the undersurface of a blank writing web upon which the student records his responses to such intelligence transmitted therethrough. The blank web is arranged over a light transmitting intelligence viewer plate which serves as a writing surface. In this way a programmed sequence of interrogatories may be completed by the student learner as if he were reading printed materials and answering questions by recording responses in order to learn the particular presented subject matter. However, the necessary printing costs, inherent in the prior art due to the fact that the printed web of material onto which the student writes his answer is not re-usable, are eliminated due to the fact that the student only writes upon a blank web of material rather than the web of material containing the intelligence itself.

The prior art in teaching machines shows that the intelligence or interrogatories are written upon a sheet of paper upon which the student records his responses and therefore must be thrown away at the end of each using and therefore necessarily incurs greater cost than does the present re-usable programmed sequence of material. These teaching machines are represented by U.S. patents to Skinner 2,846,779 and Fernbach 2,837,839.

Some of the prior teaching machines overcome the difficulty of having to print all of the intelligence upon a web which is then discarded due to the fact that the student learner's responses were recorded thereupon by providing devices such as shown in Mills 2,401,434 in which the answers are indicated by a number of buttons which are operated to select a multiple choice answer. The difficulty with this type of machine is that the stu-

dent cannot construct meaningful written answers in his own words; multiple choice options restrict student responses to those provided by the programmer and are necessarily limited in scope and numbers.

The use of such operator buttons for recording responses to questions posed or information given rather than recording the desired answer directly on the web gives rise to a surrogate response, i.e., a response which is a substitute for the real answer. The use of such surrogate responses requires the student learner to give some answer other than the one which is actually called for and produces a situation in which responses are artificial rather than organic to the materials being learned.

Where surrogates are written, i.e., numerals or symbols, and are used to relate the question and answer parts of a teaching interrogatory; the symbols become surrogate responses which substitute for the true response and as the student writes the surrogate symbol the learning of the true response is less efficient as the final action of the learner relates to the substitute or surrogate response and adds an additional step in which the surrogated and basically meaningless response is substituted for the actual response.

Therefore, it is another object to present a teaching machine by which the respondent may answer questions meaningfully within the image of the questions themselves, so that the relationship is intrinsic and the learner's answer is organic to the question and does not involve the distraction of a surrogate response. Thus, it is possible by the present machine to present intelligence and information in the form of sentences and paragraphs of written material in which certain terms, symbols and forms are omitted from the material thereby creating blanks. This usage is particularly vital for such purposes as labeling the components of a diagram or picture shown on the intelligence.

The student then responds directly on the web and completes the diagram or sentence in accordance with his own skills and knowledges. He thus constructs the answer by inserting his own terms, symbols or drawings. This material is on the web and may be used to evaluate the student's progress and diagnose his weaknesses. As the student is constructing his own answers, sources of confusion are revealed by the student himself in contrast with multiple choice methods in which the student's possible responses are assigned by others. Thus more sensitive and penetrating diagnostic techniques may be used to locate student difficulties where the student is freed to construct his own responses and write them directly on the web.

It is, also, an object of this invention to provide control over the level of learning so that the weaknesses of each student may be corrected by having the student repeat all or part of the sequences of the material covered when performance evaluations show that his comprehension of the material has dropped below a prescribed standard. This object is readily accomplished by providing a machine in which parts of scientifically sequenced learning material may be reused by students where performance standards have not been met.

Another very obvious advantage is that these programmed sequences can be duplicated on film very inexpensively and therefore provide a greater number of students with the benefit of the improved teaching technique resultant from the present invention at a cost which every school system or national government could afford for its students. This particular advantage would have merit not only in this country but also in many of the underdeveloped countries where lack of education is one of the major factors contributing to lack of progress and political instability.

In the interrogatory step of the programmed sequence of teaching materials, supra, it is deemed essential that the machine be capable of allowing the student learner to write his answer to the interrogatory upon the blank

writing web so that for all practical purposes it appears that he is writing within the printed material when making his responses. Also in connection with the interrogatory step, the programmed sequence of teaching material may have the programmatically correct answer to the question set forth on the sequence in such a manner that the student must operate the machine in order to view the answer to the question and that by so operating the machine he advances his own answer into the machine so that the teaching machine is virtually "cheat-free."

It is, therefore, another object of this invention to provide a teaching machine which allows the student to record an answer to a question propounded to him and then view the programmatically correct answer after his own answer to the question has been reeled into the machine so that he cannot change the same. This object of the invention allows the teaching machine to utilize effectively one of the very valuable determinants of the teaching process, i.e., exposure to the correct answer to a question immediately after writing an answer to that question so that the student is either corrected by the programmatically correct answer so that he does not carry his error forward in his future learning, or his response is psychologically reinforced when his answer corresponds to the programmatically correct answer.

It is another object of this invention to provide a teaching machine of the type described which is particularly adapted to the purpose of having the respondent respond to intelligence or information displayed by the machine by setting forth his responses thereto by the use of a typewriter or other keyboard type of printer. It is also, a further specific object of this invention to provide a teaching machine of the type adapted to utilize the necessary determinants of the teaching process for teaching the respondent or student learner operating such machine to operate this type of equipment with a higher degree of skill and to accomplish this degree of skill in a shorter period of time than is now possible by present teaching techniques. Keyboard devices as here referred to are intended to cover any digital pressure operated devices such as, pianos, organs, typewriters, stenotyping machines, linotype machines, IBM machines and card operating machinery, varityping machines, teletype machines, etc.

The use of the present machines for such purposes as record keeping and the like is easily accomplished by replacing the programmed sequence of material with the outlines of various forms to be completed. Such a use of the present machine may be illustrated by using a photographic copy of a standard W–2 income tax form for the employees in an industrial organization. Such a photographic copy may be produced by including within the projector means a camera means which will allow the standard form to be light recorded upon the photographic sensitive filming, which in turn may be used to shadow transmit the form image. The form when recorded upon the photographic film would be projected by means of a photographic projector onto the undersurface of the blank writing web of material and the information necessary to be recorded upon those forms then written directly upon the blank web of material of the positions corresponding to the blanks on the image form. For large numbers of employees in such an organization all of the information required on these forms could easily be stored in a relatively few number of rolls of blank material without all of the unnecessary printing and extra paper being present in the files in which this information is stored. To obtain information on an employee's form it would only be necessary to re-install the image of the proper form in the machine and then select the proper reel and frame number to see what information is recorded for a particular employee. It is here pointed out that the previous example is exemplary only and there would, of course, be an infinite number of possibilities as to the types of forms which could be set forth in this manner

and the information to be filled in through recording upon a blank writing web.

It is a particular object of this invention to provide a recording machine and system whereby it is unnecessary to store recorded material upon forms for each of the entries represented by the information required by said forms.

It is a further object of this invention to provide a keyboard variation of the aforementioned recording machine which is used with specially programmed forms in response to which the respondent operator records entries called for by the form upon a specially designed blank sheet.

Thus the keyboard variation of the present machine may be employed for a teaching function or for a record keeping function or for a keyboard skill teaching function.

These and other objects and advantages of this invention will become apparent from the following description and claims. In the accompanying drawings which illustrate by way of example various embodiments of the present invention:

FIGURE 1 shows a mechanically operated modification of the present teaching machine in which the electrical system is designed to be battery powered;

FIGURE 1*a* is a schematic diagram of a modified structure of the FIGURE 1 machine;

FIGURE 2 illustrates a modification of the teaching machine of FIGURE 1 wherein rather than photographic film being used for the programmed sequence of teaching material there is a transparent web of material used for presenting the program;

FIGURE 2*a* represents an alternative to the use of a blank writing web;

FIGURE 3 shows a second modification of the teaching machine of FIGURE 1 wherein there is combined with the necessary elements of the teaching machine further automatic elements so that the electrically powered machine contains a synchronous control for the elements and includes an audio system for instructing the student;

FIGURE 4 shows a compact modification of the teaching machine shown in FIGURE 3;

FIGURE 5 shows an enlarged fragmentary top plane view of the writing surface of the teaching machines of FIGURES 3 and 4;

FIGURE 5*a* shows a cross sectional enlarged fragmentary view of the operating switches of FIGURE 5;

FIGURE 6 illustrates an enlarged cross sectional view of the writing surface and information viewing plate taken along the line 6—6 of FIGURE 5 and looking in the direction of the arrows;

FIGURE 7 is a fragmentary perspective view showing a modification of the present teaching machine wherein a typewriter is incorporated into the machine;

FIGURE 8 is a front plane view, a portion being broken away, of the specially designed roller of FIGURE 7;

FIGURE 9 illustrates an enlarged cross sectional view of the specially designed roller of the typewriter teaching machine taken along the line 9—9 FIGURE 8, and viewed in the direction of the arrows;

FIGURE 10 is fragmentary showing of a modification of the teaching machine of FIGURE 7 in which no template is necessary;

FIGURE 11 illustrates an enlarged cross-sectional view of the specially designed roller of the machine taken along the line 11—11 of FIGURE 10, viewed in the direction of the arrows;

FIGURE 12 shows a fragmentary section of another modification of the typewriter variation shown in FIGURE 7;

FIGURE 13 is an enlarged cross sectional view of the roller of the modification shown in FIGURE 12 taken along the line 13—13 and viewed in the direction of the arrows;

FIGURE 14 illustrates a fully automatic variation of the static template of the modification shown in FIGURE 7;

FIGURE 15 shows an enlarged cross sectional view of the roller on the line 15—15 of the roller in FIGURE 14 viewed in the direction of the arrows;

FIGURE 16 shows a side view of the powering means for the automatic variation of the machine of FIGURE 14 in fragmentary cross section;

FIGURE 17 illustrates a fragmentary cross sectional view of the powering means taken on the line 17—17 of FIGURE 16 and viewed in the direction of the arrows.

Fundamental Teaching Machine

Referring now to the drawings for a detailed description of the teaching machine, FIGURE 1 shows a portable and manually operated teaching machine. A compact housing structure 10 is provided for enclosing the essential elements necessary for the operation of the teaching machine. One of these elements consists of a single frame intelligence projector 12 which may be converted to a moving type projector by means mentioned hereafter. This photographic or intelligence projector is arranged in the housing in an opening and is retractable for changing the photographic film by means of the handle 14. The image produced by the projector 12 is reflected from a reflecting surface 16 onto the undersurface of an information view plate 18 which is retained immediately under aperture 20 by brackets 22. The brackets 22 are of a construction which will allow the removal of the web along one side thereof. This information viewer plate 18 may be constructed of any material which has the characteristic of being transparent to light rays a sufficient degree so that line images presented by the projected beam are not diffused or distorted by the viewer plate. Such substances as clear plastic, glass, or natural crystalline substances meet this requirement.

Brackets 22 are so placed with respect to the undersurface of the inclined writing surface 24 of the housing structure 10 so that a blank web of writing material 25 may pass between the information viewer plate 18 and the undersurface of the inclined writing surface 24. This blank web may be constructed from any recording material such as paper, plasticized fiber, plastic or the like.

The blank web of writing material is unrolled from reel 28 onto reel 30. This latter reel 30 is integrally connected by one end thereof to a mechanical gearing system such as a pawl and ratchet wheel arrangement or a rack and pinion gearing system or the like. For purposes of illustration a pawl and ratchet wheel arrangement 32 is shown in FIGURE 1. The pawl 34 is spring biased outwardly and is pivotally connected by a pivotal connection 36 to a lever arm 38 which is rigidly connected to the flange or reel 30. The ratchet wheel has internally positioned teeth and is rotatably mounted upon its center axis with respect to the inside surface of housing structure 10 and its axis is aligned with the axis of reel 30.

This pawl and ratchet wheel mechanical connection means is motivated by a rack and pinion arrangement 42. The pinion of gearing system 42 is integral with the ratchet wheel 37 and may be cut from the same piece of material so that the pinion gearing is on the outer edge of the wheel and the ratchet teeth are on the inside of the wheel. The rack 44 is positioned to slide upwardly and downwardly parallel with the topmost surface of the inclined writing surface 24. This rack is provided with an operator handle 46 for manual operation of the mechanism by the student learner.

Connected integrally with rack 44 is an information restricter plate 48 which is generally rectangular in configuration and has an information viewing opening 50 positioned therein and also is provided with a lower answer restricting portion 52.

When the information restricter plate 48 is in the posi-

tion shown in FIGURE 1 the student learner may view the information which is projected from the projector 12, reflected from surface 16, onto the undersurface of information viewer plate 18 and through writing web 26. This information is seen by the student through the information viewing opening 50 and he may then record his responses to the blanks in the material so projected upon the writing web. The student then is ready to move to the next frame of sequenced material, however, he first has an opportunity to view the programmatically correct answer to the interrogatories posed. The answer to the interrogatories may be transcribed on the lower portion of the frame in the photographed sequence of material on which the interrogatory is also transcribed. This answer is hidden from the student learner's view by information restricting portion 52. By moving the operator handle 46 upwardly the ratchet mechanism is caused to positively drive the blank writing web reel 30 by means of the rack and pinion mechanism 42. As the student then pushes the operator handle upwardly across the inclined writing surface 24, the portion of the blank writing web upon which he has set forth his answer to the interrogatory posed is reeled onto the upper reel 30, thus preventing the student from changing his answer. As he moves the plate upwardly the information restricting portion 52 also moves upwardly and thus uncovers the programmatically correct answer which was restricted from his vision thereby. On the return motion of the information restricter plate 48 a portion thereof is caused to operate a contact 54 of switch 56 which actuates projector 12 to advance the programmed sequence of material to the next frame. As the sequence of programmed material is presented to the student it may become necessary to show the student a sequence of frames in a moving frame manner so that motion of objects or a series of changes in a process may be presented. For this purpose the photographic film sequence itself may be marked in some manner so that when the marked portions of the film contacts a member within projector 12 the projector is caused to operate automatically until the required sequence of frames has been shown and then is reverted to frame sequence operation. By having projector 12 operate only after the information restricting plate 48 has been returned to rest position the interrogatory of the next frame is not viewable by the student so that he might have time to change his answer or to see the answer to the next interrogatory before the answer restricting portion 52 covers that portion of the information viewing plate 18 through which the answer to such interrogatories is transmitted.

The projector of the teaching machine shown in FIGURE 1 is designed to be battery powered so that it is an entirely portable unit. The batteries are situated within projector 12 so that they may be changed whenever necessary at the same time the film is being placed within projector 12. Projector 12 may be of any size and for very compact arrangements should use 8 mm. film or less, e.g. micro film sizes. Any light propagation source control means which is adapted to controlling the light source for presentation of intelligence may be used; e.g. video-tape operated camera projectors. Also, closed or open TV circuits could be used to operate such projectors.

The housing 10 may be provided with an opening arrangement so that the blank writing web 26 may be changed when necessary and taken out for evaluation purposes. Such an opening arrangement may be provided by hinging a portion of the housing with a hinge such as 58 and then causing the hinged portion to be pivotal about the hinge by lifting a handle 60. The reels of web material may be arranged within the housing 10 for easy installation and removal, such as a cartridge-type reel which may be self threaded across the information viewer plate. Such threading may be easily accomplished by providing web tracks and sprocket holes within the web and a sprocket wheel contacting these holes to move the web by the wheel.

It will be noted that the teaching machine shown in FIGURE 1 which is battery powered, and entirely portable is particularly advantageous for use in underdeveloped countries wherein electric power is as yet largely unavailable.

It is also to be noted that the information restricting plate 48 may be formed in any configuration with respect to the information viewing plate 18 and the inclined writing surface 24 so that a suitable and comfortable writing surface may be presented for the student and the blank writing web 26 may be presented to the student at the upper most surface of the inclined writing surface 24 rather than at a lower position as shown. The top plan view of the inclined writing surface 24 will be further discussed in relation to FIGURES 5 and 6.

An alternate construction of the basic components of the fundamental teaching machine shown in FIGURE 1 is that arrangement illustrated in FIGURE 1*a*. In this arrangement a light source S propagates light (illustrated by arrows) upon the blank writing web 26. As the student records his responses thereupon the image of these responses is shadow or opaque transmitted by the light through a suitable optical arrangement 62.

Included within this optical arrangement is a projector which projects the images of the programmed materials.

The images of the student's responses and the presented material are combined within the arrangement 62 and projected onto the undersurface of the viewer plate 18. Thus by properly positioning his writing upon the writing web 26 the student may view through plate 18 his responses correctly integrated with the stimulus presented. Arrangement 62 has a connected switch 59, as does projector 12 of FIGURE 1. Such a combination of images may be accomplished by a standard type opaque projection device in combination with a shadow transmitting web or film such as shown in U.S. Patent 2,553,903, to Dufour, FIGURE 4. The writing web 26 corresponds to element 5, while the arrangement 62 corresponds to elements 12, 13, 14.

The components of this alternate construction may be housed in a suitable housing 63 such as 10 of FIGURE 1 and the construction presents many of the same advantages as does the machine of that figure. Housing 63 may have a hinge means 64 for opening the same and a handle 65 as in FIGURE 1. A similar information restricter plate 66 is slideably positioned on the upper portion of the housing and has a like information restricting portion 67 affixed to the lower part thereof. The rack and pinion arrangement 68 operates the feed reel for writing web 26 through a belt 69, as in FIGURE 2. The light source S and the opaque projector and intelligence presenting arrangement 62 are connected to a common electric supply E.

Modified Fundamental Teaching Machine

Referring to FIGURE 2, the teaching machine shown therein is a variation of the teaching machine of FIGURE 1 in that the intelligence or information of the programmed sequence of material is recorded upon an information web 70 which is positioned by rollers 72 to slide across the surface of information viewer plate 74. The blank writing web 76 is positioned by means of rollers 78 with respect to the information viewer plate so that the student learner's responses may be recorded upon the writing web 76 in response to the interrogatories posed by the information recorded upon the information web 70. A light source 82 is provided immediately below the information viewer plate 74 so that the intelligence recorded upon web 70 may be transmitted through the blank writing web into the view of the student learner. It is to be noted that the information web 70 may be positioned on either side of the information viewer plate 74.

The blank writing web 76 is designed to be unreeled from reel 84 onto reel 86 whereas the information web 70 is designed to be unreeled from reel 88 onto reel 90. Both reels 86 and 90 may be driven in much the same manner as is shown in FIGURE 1, i.e., ratchet and pawl mechanisms or by comparable mechanical linkages so that they are powered to reel in their respective webs either at the same rate or at differential rates. Information restricter plate 92 is provided which is connected by a spring linkage system (not shown) to answer restricting plate 94 so that as plate 92 is slid downwardly plate 94 is first moved into its covering position. The information restricter plate is mounted within guides 96 for reciprocable movement and is provided with an operator handle 98 for reciprocating the same. The answer restricting plate 94 is positioned on the undersurface of information viewing plate 74 so that the student will not be hindered by having a member protruding from the inclined writing surface 80.

The driving mechanism for the two reels 86 and 90 is a rack and pinion gearing system 100. Rack 102 is integrally connected with a portion of the information restricter plate so that upon operation of the handle operator 98 rack 102 is caused to move over the teeth of pinion gear 104 which is rotatably mounted within the machine housing. A cable drum 106 is provided on one side of the pinion gear 104 so that power transmission cables 108 and 110 may be mounted thereupon. Cable 108 is a single loop pulley cable having the other end wound about a pulley 112 which is rotatably mounted within the machine housing. On the inner edge of pulley 112 are ratchet teeth 114 which provide reaction surfaces for the pawl 116 which is pivotally mounted and outwardly spring biased upon the flange of reel 86 so that as the rack 102 is moved across the pinion teeth of pinion gear 104 the power cable 108 is moved so as to cause the reel 86 to wind up the web of material 76. The mechanism of reel 90 works in the same manner as does the mechanism described for reel 86. Except that reel 90 reels the information web 70 onto the reel during the return motion of the rack 102 which action is provided by a double loop cable 110. Thus, new information is not brought into student's vision until he has completed the answer to the interrogatory posed by the previous frame in the sequence of material and has had an opportunity to view the programmatical answer by sliding the answer restricting plate 94 upwardly which simultaneously reels his recorded response to the information under the information restricting plate 92.

A similar hinged opening as in FIGURE 1 may be provided in the machine housing as shown by hinge 118 and handle 120. This machine has many of the advantages that the teaching machine of FIGURE 1 presents in that it is compact, economically manufactured, portable, and allows reusable webs of sequenced programmed materials to be used interchangeably in many machines, and also presents the factor of being less expensive to produce in that a compact film projector is not required for operation of the machine so that all that is necessary is a source of electrical power for operation of the light source 82, such as a battery source 83. Also as no photographic film is required for the machine's operation as the programmed sequence of material may be printed upon a web of such material as paper and reused so as to effect the economic savings inherent in the use of the present machine.

It should be noted that the reel supports in all of these teaching machines may be spring biased so that the reels of writing webs or information webs may be easily removed and replaced within the machine.

As an alternative to using a disposable web of writing material for response recordation an erasable endless belt 122 may be provided as shown diagrammatically in FIGURE 2*a*.

The belt consists of two layers and is supported by rollers 123 and 124. The outer layer 125 is a light transmitting substance of celluloid or other plastic. The inner belt 126 is constructed of similar material but has strips of wax or petroleum compounds deposited thereon so that the student when he presses a stylus downwardly upon the outer layer presses the same into adhering contact with the waxed portions and allows the student to view his responses as impressions. As the student uses the machine with this endless belt included therein the two belts are separated by a wedge 127 from their adhering contact to thereby prepare them for later use. The wax is applied in strips where it is opaque but may be continuous if it is light transmitting.

This alternative, of course, does not permit a permanent record of the responses so that the use is most effective when restricted to students who are capable of progressing through the program unaided and unchecked.

Automatic Teaching Machine Variation

Referring now to FIGURE 3, the teaching machine shown therein is designed to have included in the mechanism an automatic powering means for the blank writing web reel and is also equipped to have sequential operation of the projector and to have included audio equipment for giving auditory instructions and information to the student learner. A desk type housing 130 is provided in which is contained a photographic projector 132, auditory equipment 134, a motor 136 for powering the blank writing web reel 138, and a synchronizing unit 140 which also functions as the power intake and distribution device. As internal mounting means 142 may be provided for housing the auditory equipment 134 and the motor 136. The auditory equipment is provided with a loudspeaker 144 mounted within the housing 130.

An information viewing plate 146 is provided on the undersurface of the inclined writing surface 148 of the housing structure 130 and is positioned within opening 150 so that blank writing web 152 may be reeled across the upper surface of the information view plate 146. The information viewer plate is supported within the housing 130 by brackets 154 which have inclined surfaces 156 for slidably engaging the blank web of writing material 152. The blank web is unreeled from reel 158 onto previously mentioned power driven reel 138 which is powered from motor 136 through power chain or belt 159.

An information restricting plate 160 is positioned within guides 162 upon the inclined writing surface 148 and along the opposite edges thereof are a pair of linkage rods 164 slidably mounted which connect the information viewer plate with the answer restricting plate 166 which is supported for slidable movement in a bracket 168. The linkage is slidably mounted upon either the opposite edges of the information restricting plate or of the answer restricting plate. After the student has recorded his responses upon the blank writing web 152 in response to the interrogatories posed by the image shown through the information viewer plate 146 by means of the photographic projector 132, he then slides the restricter plate downwardly in its guides 162 by means of a handle operator 170. The linkage rods 164 are arranged to slide in slots in either side of the information viewer plate 160. Abutments 172 are provided for the slots on either side of the information viewer plate 160 and are contacted by the pivot pins of the links 164. The reciprocal motion is transferred by means of the linkage pair to the answer restricting plate 166, and it is thereby moved downwardly. Immediately after the downward motion of the answer restricting plate has begun switch 174 is actuated by the plate and this then causes the blank writing web which has been written upon by the student and which is now under the information restricting plate to be reeled upon power driven wheel 138 by means of an electrical signal switched on by 174 traveling through associated conductor 176 through the synchronous unit 140 and the power transmission line 178 to the motor 136. The student

then may view the answer to the question which he has just answered in the answer viewing portion of the information viewer plate **146**. Upon returning the information viewer plate **160** to its upwardmost position and also continuing the motion until the answer viewing plate has covered the answer portion of the viewer plate the switch **174** is again actuated and the signal is carried to synchronous unit **140** which then operates the projector **132** for advancing the programmed sequence to the next frame of material. In this modification if the instructions and information given to the student learner require auditory signals at a proper frame or frames in the photographic sequence a mark upon that frame or frames may trigger an electrical response through the synchronous unit **140** so that the auditory equipment **134** and **144** are caused to operate. This auditory signal may either come from an independent source contained in housing **134** or may be a sound track upon the film used.

It is also to be noted that if a movie-type sequence of frames is desired to be shown a suitable mark upon the sequence of materials may trigger an electrical circuit to cause the projector **132** to go into motion type movement.

It should be here pointed out that the instant teaching machine is "cheat-free" in that the student learner does not have an opportunity to change his response to the information presented after viewing the programmatically correct answer.

Referring now to FIGURE 4, the teaching machine shown therein is a modification of the teaching machine shown in FIGURE 3 and consists of a housing **130**, a slidably removable photographic film projector **132**, auditory equipment **134** and a motor **136** for powering the blank web takeup reel **138**. A synchronous unit **140** is provided for coordinating the related functions of the various components. A support **142** may be provided for containing some of the components as described in the discussion of FIGURE 3. A loudspeaker **144** is, of course, provided for auditory equipment **134**.

A reflecting surface **145** is positioned within the housing so that the photographic image of the information to be presented to the student learner may be reflected onto the undersurface of information viewer plate **146** and then through the blank web of writing material **152**. The information viewing plate **146** is positioned on the undersurface of inclined writing surface **148** and is positioned within or immediately below the opening **150** and is retained thereby through brackets **154**.

The web of writing material **152** is contained in unused form on reel **158** and is caused to reel upon the top powered reel **138**.

An information viewer plate **160** is slidably mounted within a sliding track **162** and also has an answer restricting portion **166** at the lower end thereof. The information restricting plate is provided with a handle operator **170** by which the student learner may slide the information restricting plate in the sliding brackets **162**.

In the position shown the information may be transmitted to the student through the information viewer plate **146** and he may then record his responses to the interrogatories posed therein. When he has completed the interrogatories and wishes now to view the programmatically correct answer which is restricted from his view by answer restricting plate **166** he pushes the handle **170** upwardly and immediately upon motion thereof switch **174** is actuated which reels the portion of the blank writing web upon which the student has transcribed his responses under the information restricting plate and the housing at **176**. The student may then view the programmatically correct answer as the presented intelligence remains upon the return of the information restricting plate **160** to rest position whereby the answer is again covered and the switch **174** then causes the programmatic sequence to be changed to the next frame. The possibility of the student learner cheating on the teaching machine by uncovering the answer portion by returning the plate **166** almost to rest position and recording his answer upon the blank writing web is obviated by having the student draw a heavy line on the blank writing web immediately at the beginning of the sequence of presentation of the learning material which thereby prevents his skipping a space and then recording his answer after the writing web has already reeled under the housing portion **176**. Of course, this method of cheat prevention is valid on any modification of the machines.

To provide the student with the availability of a rerun of all or a portion of the sequence, a rerun switch **179** may be provided.

It is to be noted that this modification of the teaching invention may be battery powered by batteries as well as outside electrically powered from conventional current lines. The machine is completely automatic in operation and may be provided with an access opening to change the reels **138** and **158** and the reel supports therein may be spring mounted as aforementioned for ease in mounting and changing.

The same sequencing of the learning material and corresponding auditory equipment may be carried out in this modification as was described in connection with the teaching machine of FIGURE 3.

Referring to FIGURE 5, the structure shown therein is a top plan view of the inclined writing surface of FIGURE 3. The information viewer plate **146** is positioned conveniently upon the inclined writing surface **148** in the opening **150** and is supported therein by brackets **154**. The blank web of writing material **152** is supported by the brackets **154** upon the inclined surfaces **156** of FIGURE 3. The blank web of writing material reels onto power driven reel **138** from storage reel **158**. The first of these two reels is powered by means of an electric motor **136**. The device is provided with an information restricting plate **160** which is slidably mounted within the guides **162** and has depending from either or both of the sides thereof power transmitting links **164** which are attached at their opposite ends to the answer restricting plate **166** which is mounted in bracket **168** on the underside of the writing surface **148**. The information restricting plate **160** is provided with a handle operator **170** for reciprocating the same within the guides **162**. The power links **164** are slidably mounted within slot **171** and there are abutments **172** at both ends of the slots so that when the links **164** contact these abutments they are caused to transmit motion to the answer restricting plate to move it to and from rest position. In the figure shown the information restricting plate **160** and the answer restricting plate **166** are shown in the position at which the student may record his responses to the intelligence projected through the information viewer plate **146** onto the blank web of writing material **152**. When the student desires to go on to the next frame of the learning sequence he then slides the information restricting plate **160** down on the inclined writing surface **148** by means of handle operator **170**. When the power transmitting links **164** contact the upper abutment **172** on either side of the information restricting plate the motion is then transmitted to the answer restricting plate **166**. Immediately after this answer restricting plate has begun to move out of restricting position the switch **174** is actuated so that the portion of the blank writing web which the student has used to make his answer on is reeled back up into the machine on reel **138**. After the student has had an opportunity to read the programmatically correct answer he then slides the information restricting plate upwardly by means of the handle operator **170** and in doing so the back abutments **172** contact the links **164** which are free for sliding movement within the inclined writing surface by means of slots **165** therein. The switch **174** is again actuated as the answer restricting plate **166** passes thereover so that the next frame of material is presented to the student

for his responses. It is to be noted that the correct answer to this frame is covered up at the time which the frame is shown to the student so that the student never has the opportunity to look at the answer and then write his responses thereto.

The reels **158** and **138** may be provided with spring supports **178** so as to provide for ease in changing and removing them.

FIGURE 5*a* shows a detailed view of the answer restricting plate **166** and its contact with the switch **174**. A spring member **175** is provided on the undersurface of **166** so that the switching means of switch **174** is actuated both on the downward and upward motion of answer restricting plate **166**.

FIGURE 6 shows a cross section of FIGURE 5 on the section line **6—6** and shows the relative positioning of the information restricting plate **160** and its associated guides **162** in relation to the inclined writing surface **148** and the information viewing plate **146**. The blank web of writing material **152** is shown immediately overlying the information viewer plate and being reeled upon the upper reel **138**.

Keyboard Variation

The keyboard variation of this teaching machine is herein illustrated by reference to the specific example of a typewriter. Such a typewriter is designed to be used with a programmed re-usable information web which is in the form of a strip of paper or like material having the dimensional characteristics compatible with the width of the carriage of the particular typewriter in use. This information web may be used for inscribing information and interrogatories upon or may be used for inscribing a programmed sequence of typing materials by which the student may compare the prepared program with his own typing immediately after recording the same.

The latter use of this variation of the teaching machine is best accomplished by recording upon the information web a series of letters and/or numerals or other symbols in a typed form. This information web is then covered on the keyboard side of the typewriter roller by a blank web of writing material so that the student does not see the typed material until after he is required to type the same material upon the blank web but immediately after so typing each portion the student has exposed into view the programmatically correct typed material which is recorded on the information web underlying the blank writing web upon which he is typing. In this way the student obtains immediate feedback of errors and correct responses which is critical for learning.

It is contemplated that in the use of this typing machine the student will type from either pre-printed or auditory programs of instruction. This material will have the same terms and symbols as the typewritten or printed letters and/or numerals recorded upon the information web. Effective use of this modification of the teaching machine may be obtained when learning material is presented in an auditory fashion so that the student can see his typing superimposed over the correctly typewritten material immediately upon typing the auditory information. This use of the typewriter variation is particularly important in teaching typists, secretaries and stenographers to type efficiently and quickly from dictaphones or similar devices which are widely employed in various offices at the present time. In this connection, correlated teaching programs consisting of both printed and auditory programs may be used.

This use of the keyboard variation of the teaching machine to instruct student typists effectively provides for immediate designation of errors and for accurately evaluating student progress. As the learner immediately sees any deviation from the programmed material the student has the capability of self-evaluation of his responses which, of course, lessens the necessity for the presence of a teacher. The deviation from any of the possible error sources in typing is immediately recorded, i.e., incorrect letter, numeral, or symbol usage, spacer bar error, punctuation and capitalizing errors.

Referring now to FIGURES 7, 8 and 9 the typewriter variation of the teaching machine shown therein is a standard mechanical or electrical typewriter in all respects other than the carriage of the machine or more specifically the roller and the knobs actuating the roller. Thus the teaching machine may be manufactured as a complete machine or in an addition kit form. In addition to this change in the standard machine equipment there is an addition of a template which remains stationary relative to the base of the typewriter and is attached thereto and is designed to slide under a transparent surface of the typewriter roller so that light from an interior light source may be propagated from the interior of the roll onto a specified portion of the roller whereby typewritten material on the information web is transmitted through the blank writing web so that the student sees such written material immediately after he has typed the same.

Referring now to FIGURE 7 a fixed U-shaped template **180** is shown. This template is fixed relative to the base **182** of the typewriter **183** and extends outwardly to the right of the typewriter a sufficient distance so that the typewriter may be indexed at the left hand side of the paper.

The roller **181** which is specially designed to receive the template **180** is best shown in FIGURE 9 wherein the template **180** enters the underside of the rotatable transparent roller sleeve **184** which is mounted on carriage **185**. The template is also positioned on the inside surface of the fixed core of the roller **186** by longitudinal brackets **188**. Core **186** is provided with a longitudinal slot **187** therein at the level at which the typewriter keys strike.

FIGURE 8 shows the modification of the standard carriage structure which permits core **186** to remain stationary with respect to the carriage and the roller sleeve **184** to be rotatable thereabout. A gear housing **190** is provided between roller knob **192** and the roller **181**. The roller core **186** is rigidly attached to the interior of gear housing **190** by conductor rods **194** and the gear housing **190** is then rigidly attached to the carriage **185** so that the core remains stationary to the carriage and reciprocates therewith. The core may be rigidly attached to a gear housing at either one or both of the ends of the roller.

As the core **186** is rigidly attached to a member between the roller and the roller knob a bypassing gearing system must be employed. Such a system is shown by connecting roller knob **192** and associated spindle **195** with pinion gear **196** which in turn is enmeshed with idler gear **198** which is supported by spindle **199**. A cylindrical gear **200** is positioned between idler gear **198** and sleeve roller gear **202** so that power may be transmitted to the latter by means of the former. Cylindrical gear **200** is attached relative to the carriage **185** by a suitable bracket such as support bracket **204**. Sleeve roller gear **202** is designed to be on annular gear but the only requirement at the left side is that it has a central opening sufficient for conductor rod **194** to pass through while the right side gear must be annular to permit the passage of the template therethrough.

Likewise, the gearing system as well as the supporting structure may be positioned on one or both sides of the roller.

To fulfill the function of allowing the material recorded upon the information web to be visually displayed through the blank typewriting web a light source such as a fluorescent, neon, or elongated incandescence bulb **206** is arranged in the roller core **186** and is supported therein by means of insulating spiders **208** at either end thereof and has a socket housing **210** rigidly connected to the spiders **208** for conducting electrical current to the bulb **206**. The conductor rods **194** provide electrical conductors

from the socket 210 into the gear housing where the rods are contacted by conductor members 212 one of which is grounded directly as shown in FIGURE 8 at 214 and the other grounded thru an electric power source 216 whereby electric current may be run in the described closed circuit to operate the bulb 206. The electric circuit then continuously lights the bulb 206 so that the information recorded upon the information web overlying the open slot 187 may be shadow transmitted onto and through the blank writing web for the students's viewing.

The opaque template 180 is positioned to end immediately to the left of the position at which the keys of the typewriter strike the roller. Thereby as the carriage moves to the left after the typing of each letter the student sees on the lighted portion of the slot 187 the correct letter behind the letter he has just typed so that any error in the same will immediately become obvious and hence will promote corrective learning rather than carrying an error in typing forward in the proces of learning the skill of the same.

The electrical connections for the electrical circuit where the electrical source 216 is in the base of the typewriter rather than the carriage is shown in FIGURE 9 wherein sliding contacts 218 are shown between the carriage 185 and the base 182. These contacts are in conductive engagement with the supporter-conductor members 212 at either end of the carriage by lines such as 217.

It is to be noted that in the preparation of the information web and the auditory or written signals in conjunction with the same various lessons may be prepared so that they require the student to type more often any particular letter or series of letters so that once a particular letter on the typewriter or series of manipulations are shown to be difficult for the particular student he may be given specially prepared and programmed typing sequences which deal with his particular problem so as to give practical correction of such difficulty.

A requirement for the most efficient operation of this machine is that the programmed material web be positioned correctly with respect to the base and hence the keys of the typewriter. Such position is necessary to assure exact superimposing of the programmed printing behind the disposable blank web upon which the student types. There are several means by which this requirement may be fulfilled. The first is to fold a marked portion of the information web around the edge of the blank web so that the marks described thereupon may be used to position the materials by aligning the marks with several typewriter key imprints. The second is to provide a radical which is fixed relative to the typewriter base which may be aligned with respect to an information web marking.

The information and blank webs described herein may be separate sheets or they may be connected sheets, particularly, along one edge thereof. Alternatively they may be incorporated into the same sheet by printing the programmed materials on back side of the blank sheet in reverse mirror image so that the printed letters, numerals, and symbols will be superimposed by the correct typing of the same.

Referring to FIGURES 10 and 11, the typewriter variation of the teaching machine shown in FIGURES 7 and 8 and 9 described above may be modified to the extent that the template covering the slot 187 may be eliminated and a switch may be interposed in the serial electrical power circuit for operation of the longitudinal light source 206 so that the light source is only activated when the carriage has moved across the typewriter to the far left hand position. At that position the light source is activated so that the entire slot 187 is lighted and the information or pretyped wording along the entire line is shadow transmitted through the blank web of material on which the student has recorded his typing so that the student may compare his typing with the pretyped information upon the information web. To accomplish this purpose the typewriter variation shown in FIGURES 10 and 11 has been invented. The FIGURES show a schematic diagram of a typewriter roller 181 associated with a typewriter base 182 wherein the roller consists of a roller sleeve 184 which has end portions 220 which are connected to rotation transmitting sleeves 222 which are rotatably secured with gear housings 190 on either end thereof. Disposed within the roller sleeve 184 is the roller core 186 which has therein a longitudinal slot 187 disposed at the typewriter key striking level of the carriage 185. This roller core 186 is supported relative to gear housing 190 by the insulating spiders 208 which are connected by their internal periphery to the conductor rods 194 on either side of the roller 181. The roller knobs 192 have associated spindles 195 rotatably mounted within the gear housings 190. The spindles 195 have connected thereto at their internal ends pinion gears 196 which in turn enmesh with cylindrical gears 200 which are supported by spindles 201. The other end of these cylindrical gears contact roller gears 224 which are integrally connected with the end of the rotation shafts 222 mentioned above.

A longitudinal light source 206 is arranged axially within the roller core 186 and is supported therein by the insulating spiders 208 which have socket housings 210 connected thereto for the purpose of holding such a light source as longitudinal bulb 206. The conductor rods 194 then provide electrical conductors from the light source to the conductor members 212 which are disposed within each of the gear housings 190. In this particular modification the conductor member 212 also serves as the supporting member for the roller core, the insulating spiders and the associated elongated light source 206. Also, a rotation limiting gear spring such as 213 may be provided.

In order to provide for the actuation of the light source at the point when the carriage has reached its extreme left end position upon the typewriter base a track 226 is disposed on the under surface of the carriage 185 and is in electrical brushing contact with the electrical brush 228 which is forced by spring 230 into brushing contact therewith (best shown in FIGURE 11). The power source 216 is connected between electrical brush 228 and a first spring finger 232 which is disposed within a slot 234 within the typewriter base 182. The electrical switching contact is provided by a second spring finger 236 which depends from the carriage 185 and is in electrical contact with conducting member 212 which is in the right hand gear housing 190 and is designed to contact spring finger 232 when the carriage 185 is moved to the extreme left hand position. When this condition occurs the two spring fingers will be in electrical contact and the power will then flow from battery or electrical source 216 to the first spring finger 232 through the second spring finger 236 into the conductor member 212 then through the right hand conductor rod 194 and into the light source socket 210, through the light source 206, into the left hand light socket 210, and then through conductor rod 194 in the left side of the carriage and through conductor member 212 into the track 226 which will then engage electrical brush 228 which is connected to the other side of the electrical source 216.

In this manner the information shown on the information web is not presented to the student through the writing web until the student has completed one line of typing and at this position the spring fingers will contact one another and the light bulb or light source 206 will be lighted so that information which is contained on the information web will be shadowed transmitted through the writing web whereby the student may compare his typed wording with the programmed or pretyped wording upon the information web so that he may have the comparison learning value derivable therefrom.

Referring now to FIGURES 12 and 13, another modi-

fication of the typewriter variation shown in FIGURES 7 through 9 and particularly the modification shown in FIGURES 10 through 11 is the modification shown wherein a pivotable template 240 is rotatably mounted upon the conductor rods 194 at either end of the roller so that the template may be swung into and out of covering position of the slot 187 whereby the light source 206 may be continuously lighted and the template withdrawn from covering position at the extreme left hand portion of the carriage movement so that an effect exactly similar to that described to the modification of FIGURES 10 through 11 will be observed by the student. In this modification template arms 242 are provided which are in pivotable connection with the conductor rod through pivot member 244. Connected to an end of these members 244 within the gear housing 190 is a solenoid lever 246 which is pivotally connected at the outer end thereof to a solenoid rod 248 which is operated by means of solenoid 250.

As this solenoid 250 is only intended to operate when the carriage is in the extreme left hand position on the typewriter base a similar pair of spring contacts or spring fingers are arranged in a slot 234 between the carriage and the base of the typewriter as was described in FIGURE 11. Whene these spring fingers 252 and 254 contact one another the solenoid 250 is caused to operate whereby the described effect is accomplished.

In order to operate the modification of FIGURES 12 and 13 a series of tracks must be provided on the undersurface of the carriage which are then in contact with electrical brushes which are connected to the base of the typewriter and are then in electrical contact with the electrical source 216. The first of these electrical tracks is track 256 which electrically contacts the light source socket 210 by conductor member 212 and conductor rod 194 at one end of the roller. Electrical track 258 serves the duel function of carrying electrical current to the electrical socket 210 on the other side of the roller and provides one side of the solenoid coil 250 with electrical contact to the battery source 216. Electrical tracks 256 and 258 are connected respectively by electrical brushes 260 and 262 to the battery source 216. The other end of the solenoid coil 250 is connected to electrical track 264 which is then contacted by electrical brush 266 which is connected to one of the spring fingers 252, in this instance the spring finger is connected to the base of the typewriter. The depending spring finger 254 which is disposed at the right hand side of the carriage is then connected by connector 268 to an electrical track 270 which is contacted by electrical brush 272 and is in electrical contact with the battery source 216 so that when the two spring fingers contact current is carried from one side of the battery or electrical source through the solenoid 250 then through the other of the electrical tracks and electrical brushes to the other side of the battery or electrical source. In this manner the described actuation of the template 240 is caused to occur.

FIGURES 14 and 15 illustrate a more automatic type of operation and somewhat more complicated structure to perform the type-writing instruction function of the instant teaching machine. In these Figures the roller 181 and the base 182 of the typewriter 183 are essentially similar to the same components which were described in relation to FIGURES 7 through 9. In the first described typewriter variation the template was rigidly fixed with respect to the typewriter carriage. In the modification shown in FIGURES 14 and 15 the template 280 is constructed of a flexible opaque strip material whereby it may be rolled upon a reel 282 bracketed to the base of the typewriter 182. The roller end of the flexible template 284 is designed to slidably engage the interior of the roller core 186 so as to cover that portion of the slot 187 to the right of the key striking position and is supported for this purpose by brackets 188. Connected to the end 284 of the flexible template is a helical spring 286 disposed within the interior of the roller core and disposed about the periphery of the longitudinally disposed light source (as best shown in FIGURE 15). This helical spring is connected to and utilizes as a reaction surface the right hand insulator spider 208 so that the spring is in tension and increases in tension as the end 284 is pulled toward the right hand side of the roller 181. As the flexible template is so moved across slot 187 an increasingly longer length of that slot is exposed so that the light source which is in continuous operation propagates light through the slot and through the information sheet so as to shadow transfer information upon that sheet onto and through the blank writing web so that the student's typed wording may be compared with that on the information sheet to provide the aforementioned comparison learning value.

In order that the flexible template 280 may be rolled upon the reel 282 and conveniently stored a guide 288 is employed which is connected to the roller core at the righthand side thereof and serves to transfer the flexible template from the plane represented by the slot 187 into the plane necessary for it to engage the reel 282.

The powering means and storing means for the flexible template is shown in FIGURES 16 and 17 and consists of the reel 282 which is supported by a pair of brackets 290 upon the side of the typewriter base 182.

In order that the flexible template 280 may be reeled onto the reel 282 as the carriage moves to the left on the typewriter a positive drive means is provided so that the template may be wound up against the tension of the helical spring 286. Such a drive means is shown as 292 which consists of a reciprocating rack 294 which is connected within the interior of the typewriter to a suitable reciprocating element by which continuous reciprocal motion is available for actuation of the rack 294. The rack 294 extends through the typewriter base 182 by means of slot 296. The rack 294 engages pinion gear 298 which then transmits power to the sleeve 300 which is rotatably mounted within one of the brackets 290. Connected to the other side of this sleeve is a ratchet gear 302 which has internal ratchet teeth 304. Rotatably connected to a plug 306 which is rigidly affixed to the interior of the sleeve 300 is the spindle 308 which rotatably supports the reel 282 within the plug 306 and hence in rotating engagement with the bracket 290. The other end of the spindle 308 is also in rotating contact with the other bracket 290 except that a damper coil spring 310 is rigidly connected by one end thereof to the spindle 308 and is connected to at the other end thereof to spring housing 312 which is in rigid contact with the bracket 290 so that damping effect is provided for the template 280 whereby the helical spring 286 which is a stronger spring than is 310 will not impact the roller end of the template against the left hand side of the slot 187 when the template is unwound from the reel 282.

In order to transmit power between the internal ratchet teeth 304 and the reel spindle 308 a ratchet member 314 is provided which is spring biased outwardly and pivotally connected to the spindle 308. Whereby as the rack 294 is reciprocated the template 280 will be reeled upon reel 282 by means of a power transmitted to ratchet 314. In order that during the non-powering stroke of the rack the reel is not reversed the same amount it has just proceeded in a winding direction by means of the helical spring 286 pulling the template from the reel a catch means 316 is connected to the typewriter base 282 and does not reciprocate with the rack 294. This catch means inacts upon the reel 282 by means of fitting in the notches 318 disposed around the periphery thereof.

In order to permit spring 286 to return the template 280 to the left hand side of the roller core the rack 294 must be cleared from contact with the pinion gear 298 and for this purpose a cam member 320 is provided which is actuated by the initial movement by the carriage to the right. It is to be noted that the cam member 320 clears

both the rack 294 and the catch means 316 from engagement with the pinion gear and the reel respectively.

The gearing system 292 above described is only representative of a gearing system which could be employed to reel the template 280 into a compact housing to avoid the possible objection to the rigid U-shaped template shown in FIGURE 7.

The winding of the template upon the reel 282 may be controlled with respect to the spring constants of the two springs 286 and 310 whereby the roller end of the template is maintained at all times at the key striking position of the movable carriage 185 so that the described function results.

While the invention has been described, it will be understood that it is capable of further modifications and this application is intended to cover any variations, uses, or adaptations of the invention following in general, the principles of the invention and including such departures from the present disclosure as come within known or customary practice in the art to which the invention pertains, and as may be applied to the essential features hereinbefore set forth and as fall within the scope of the invention or the limits of the appended claims.

Having thus described my invention what I claim is:

1. A recording machine for allowing a respondent to record responses to presented intelligence, said machine comprising a nonrotatable housing with an opening therein, a light transmission means covering said opening, light propagation means within said housing for propagating light through said light transmission means, said housing opening restricting the light transmitted to a small proportional area of said housing, a recordation web for allowing a respondent to record responses thereon, said recordation web positioned to receive light from said propagation means, an intelligence presenting web positioned in the beam from said light propagation means, said propagation means providing for transmission of intelligence from said intelligence web and providing for transmission of said recorded responses from said recordation web to provide for viewing by a respondent, and control means for controlling the presentation of a portion of said presented intelligence independently of variation of said light propagation means, said control means operable independently of movement of said intelligence presenting web with respect to said light propagatian means, whereby a respondent may view said presented intelligence and said recorded responses within the images of one another.

2. A recording machine including a nonrotatable housing having an opening therein for allowing a respondent to record responses to presented intelligence, comprising a light transmission means covering said opening, light propagation means within said housing for propagating light through said light transmission means, said housing opening restricting the light transmitted to a small proportional area of said housing, a recordation web for allowing a respondent to record responses, said recordation web positioned to the outside of said light transmission means to receive light from said propagation means, an intelligence presenting web positioned between said light propagation means and said recordation web, said light propagation means providing for shadow transmission of intelligence from said intelligence web through said recordation web, and control means for controlling the presentation of a portion of said presented intelligence independently of variation of said light propagation means, said control means operable independently of movement of said intelligence presenting web with respect to said light propagation means, whereby a respondent may view said presented intelligence through said recordation web and record responses thereto upon said recordation web within the image of said presented intelligence.

3. A recording machine for allowing a respondent to record responses to intelligence presented by said machine comprising, a nonrotatable housing having an opening therein, a light transmission information viewer plate positioned over said opening, a movable light transmitting blank web of writing material positioned to the outside of said viewer plate, means for moving said web relative to said viewer plate, an intelligence image projecting means for projecting an intelligence image upon the undersurface of said blank web comprised of an intelligence web and a light propagation means, control means in said machine for controlling the presentation of a portion of said presented intelligence independently of variation of said light propagation means, said control means operable independently of movement of said intelligence web with respect to said light propagation means, and said housing opening restricting the light transmitted to a small proportional area of said housing, whereby a respondent may view the intelligence image through said blank web of writing material and may record thereupon within said image his responses to such intelligence.

4. A teaching machine for presenting intelligence comprised of programmed information and interrogatories and correct answers for the interrogatories to a student learner comprising, a housing having an opening therein, a light transmitting intelligence viewer plate positioned over said opening, a movable light transmitting blank web of writing material positioned above the upper surface of said viewer plate, means for moving said web relative to said viewer plate, an intelligence image projecting means for projecting an intelligence image upon the undersurface of said blank web when it is above said viewer plate, and control means for controlling the presentation of a portion of said presented intelligence independently of variation of said intelligence image projecting means, whereby a student learner may view the intelligence image through said blank web of writing material and may record upon said blank web within said image his responses to such information and interrogatories.

5. A teaching machine for presenting information, interrogatories and associated answers to student learners and for permitting recordation of responses to the same comprising, a housing having an opening therein, a light transmitting information viewer plate positioned within said opening, a movable light transmitting blank web of writing material positioned above the upper surface of said viewer plate while in sliding contact therewith, means for moving said web relative to said viewer plate, an information image projecting means for projecting an information, interrogatory and associated answer image through said viewer plate, an information restricting plate slidably mounted upon said housing for slidably covering a portion of said opening and having an answer restricting portion integrally connected therewith, said information restricting plate and said answer restricting portion being slidable to alternately restrict the display of an interrogatory image or its associated answer which are projected simultaneously upon different portions of said blank web and said means for moving said web relative to said viewer plate operated by the sliding movement of said restricting plate to prevent the student from viewing the projecting answer image and changing his recorded response to agree therewith, whereby said student learner may view said interrogatory image through said blank web of writing material and may record upon said blank web responses to such interrogatories within the images of the same and then move said slidable information restricting plate so that the projected image of the answer associated with said interrogatory is uncovered so that he may have the increased learning value derivable from a comparison of the programmatically correct answer with his own response to the interrogatory.

6. A recording machine as defined in claim 3 wherein, said blank web of writing material is reeled across said viewer plate by reels associated with said housing.

7. A teaching machine as defined in claim 4 wherein,

said blank web of writing material is wound onto and unwound from reels associated with said housing.

8. A teaching machine for presenting information, interrogatories and associated answers to a student learner comprising a housing having an opening therein, a light transmission information viewer plate positioned over said opening, a light transmitting blank web of writing material movable above the upper surface of said viewer plate while in sliding contact therewith, reels for storing said web of writing material and for moving the same above said viewer plate, a projecting means for projecting an information image upon the undersurface of said blank web when it is above said viewer plate, an information restricting plate reciprocably associated with said housing to provide a cover for said opening and having an answer restricting portion integrally connected therewith, said information restricting plate adapted for manual sliding motion, said information plate driving at least one of said reels during one direction of reciprocation thereof so that said blank web of writing material is reeled onto said reel as said information restricting plate and said answer restricting plate are moved, whereby a student learner may view the information image through said blank web of writing material and may record within said information image upon said blank web his responses thereto and may then slidably move said information restricting plate in such a manner that the associated answer is uncovered so the student learner will have the learning value derivable from a comparison of the programmatically correct answer immediately after recording his own response thereto and by moving said information viewer plate so that such answer is uncovered, the portion of the blank web of writing material which has been used by the student will be reeled into said housing upon said one of said reels.

9. A teaching machine for presenting information and interrogatories with associated answers to student learners comprising a housing having an opening therein, a light transmitting information viewer plate positioned within said opening, a light transmitting blank web of writing material positioned to move relative to the upper surface of said viewer plate and in sliding contact therewith, said blank web of writing material being unreeled from a reel across said upper surface of said viewer plate and roller onto a driven reel rotatably connected to said housing, an information restricting plate reciprocably mounted upon said housing over said opening and having integral therewith an answer restricting portion and a toothed rack, a rotatable pinion wheel enmeshed with said toothed rack, said pinion wheel rotatably mounted within said housing and having internal ratchet teeth integral therewith, said driven reel mounted in housing and having an outwardly spring biased pawl attached at the flange portion thereof, said pawl arranged to react against the internal ratchet teeth of said pinion wheel so that motion of said rack is imparted to said reel through said pinion wheel during one direction of motion and said reel being non-rotatable by said ratchet teeth during the opposite direction of motion, an information image projecting means for projecting an information image and an associated answer image upon the undersurface of said blank web when it is above said viewer plate, said information restricting plate being slidable in one direction so that said answer restricting portion is simultaneously slidable to uncover the image of said answer, wherebythe student may view the programmatically correct answer to such interrogatories immediately after having recorded his responses to the interrogatories projected by sliding said information restricting plate in one direction which simultaneously causes said ratchet teeth to engage said pawl to rotate said driven reel causing said blank web of writing material which has been used by the student to be reeled out of view so that the student may not change his responses to agree with said programmatically correct answer, and a switching means operated by said information restricting plate when said answer restricting portion returns to answer covering position for causing said projecting device to present a new item to the student learner.

10. A teaching machine for presenting information, interrogatories and associated answers to a student learner comprising a housing having an opening therein, a light transmitting information viewer plate positioned within said opening, a light transmitting blank web of writing material movable above the upper surface of said viewer plate, a driven reel for moving said blank web of writing material relative to said viewer plate, a reel for storing the unused portion of said blank web of writing material rotatably associated within said housing, a photographic projector for projecting a film frame image of information or an interrogatory and associated answer onto the blank web of writing material into view of the student learner, at least one reflecting surface for changing the line of propagation of said projected image, an information restricter plate slidably mounted upon said housing over said opening and having associated therewith an answer restricting plate positioned to cover the image of the associated answer when said information plate is at rest position, a rack and pinion gearing system for moving said driven reel, said rack of said system integrally attached to said slidable information restricting plate, said pinion gear of said system rotatably mounted within said housing, said pinion gear having ratchet teeth on the inner surface thereof, an outwardly spring biased pawl pivotally attached to the flange portion of said driven reel, said pawl engageable with reactive surfaces of said ratchet teeth of said pinion gear, a handle operator attached to said information restricting plate, a switching means associated with said housing and operative by means of said information restricting plate returning to rest position for causing said projector to advance to the next frame of information; interrogatories and associated answers, whereby when the student learner has completed the responses to the interrogatories posed by writing his answers thereto upon the blank web of writing material he may move said information restricting plate upward by means of said handle operator, this movement in an upward direction causes said rack to move over said pinion gear which in turn causes said ratchet teeth to engage said pawl and rotate said driven reel, said driven reel then reels said blank web across the surface of said information viewing plate so that the used portion of the writing web is no longer available to the student for recording his responses upon, simultaneously with this motion said answer restricting plate is moved to uncover the answer image projected from said projector so as to provide the student with the greater learning value derivable therefrom.

11. A teaching machine as defined in claim 10 wherein said housing is provided with an opening to permit changing said reels of blank writing material.

12. A teaching machine for presenting information and interrogatories with associated answers to student learners comprising a housing having therein an opening, a light transmitting information viewer plate positioned within said opening and having the outside surface thereof flush with an outer surface of said housing, a light transmitting blank web of writing material positioned to move above the upper surface of said viewer plate, an information, interrogatory and associated answer inscribed web positioned to move relative to said viewer plate and aligned with the undersurface of said information viewer plate, a light source for projecting light through said information viewer plate, said information web of material and said blank web of writing material, whereby information inscribed on said information web is shadow transmitted through said blank writing web to the view of the student learner, an information restricting plate slidably mounted upon said housing over said opening and having integral therewith an answer restricting plate, said answer restricting plate covering the image of said associated answer when said information viewer plate is at rest position, a

powering means for moving said blank web of material relative to said information viewer plate simultaneous with movement of said information restricting plate away from rest position, and said powering means moving said information web to a new set of information and interrogatories and associated answer frames upon returning of said information viewer plate to rest position.

13. A teaching machine as defined in claim 12 wherein said housing is provided with an opening to permit changing and adjusting said blank web of writing material and said information web.

14. A teaching machine for presenting information, interrogatories and associated answers to student learners comprising a housing having an opening therein, a light transmitting information blank web of writing material positioned to move above the upper surface of said viewer plate, a driven reel and a storage reel for moving said web across said viewer plate and for storing the same in a rolled fashion, an information restricting plate slidably mounted upon said housing adjacent said opening and positioned to cover said viewer plate during a portion of the sliding movement thereof; movement transmission links attached to said information restricting plate by one end thereof for limited sliding motion, an answer restricting plate slidably mounted within said housing adjacent said viewer plate and adapted to cover a portion thereof during one portion of its sliding movement,said power transmission links pivotally connected to said answer restricting plate by the ends opposite those connected to the information restricting plate, a handle operator for slidably moving said information restricting plate and said answer restricting plate, a spring mounted switch actuator connected to said answer restricting plate, a switching means mounted within said housing and adapted to be operated by said switch actuating means, said switching means operative to control power input to said driven reel when first actuated for moving said blank web of writing material above the surface of said viewer plate, an information image projecting device positioned to project an information image upon the undersurface of said blank web when it is above said viewer plate, said switching means adapted to control said information image projecting device for changing said information image upon being activated a second time by said switch activator means, and auditory information producing equipment associated with said information image projecting device for presenting auditory information to said student.

15. A teaching machine as defined in claim 14 wherein a reflecting surface is positioned in the projected image line of propagation between said projecting device and said information viewer plate.

16. A teaching machine as defined in claim 14 wherein a rerun switch for controlling said projecting device is provided for permitting a reviewing of a part or whole of the presented information, interrogatories and associated answers.

17. A recording machine as defined in claim 1 wherein said recordation web is positioned in the beam of light propagation between said propagation means and said light transmission means and said recorded responses are opaque transmitting through said transmission means by the light beam.

18. An intelligence presenting device for shadow transmitting presented intelligence having a recordation web associated therewith comprising an intelligence presenting means, a light propagation means for transmitting the image of said intelligence onto said recordation web, and control means for controlling the presentation of a portion of said intelligence independently of variation of said light propagation means, said control means operable independently of movement of said intelligence presenting means with respect to said light propagation means.

19. A recording machine as defined in claim 18 wherein said recordation web consists of an erasable endless belt, said belt consisting of an inner and an outer layer, said belt supported on reels to provide for movement, said outer belt light transmitting and flexible, said inner belt have an adherent outer surface adjacent to said outer belt, whereby impressions of responses may be recorded by pressing said outer layer into contact with said adherent surface, a separation means disposed between said layers for separating the same whereby the impressions are erased from said belt to permit continuous use thereof.

20. In a keyboard operated device having a symbol recordation means associated therewith the improvement for permitting use of said device as a teaching machine comprising a carriage mounted upon said device, said carriage movable relative to said recordation means, a masking member connected to said carriage and having an opening disposed therein, a light transmitting cover means adjacent to the recordation means side of said masking member, a light propagation source positioned adjacent the other side of said masking member for propagation of light through said slot, light control means for controlling propagation of light from said light source through said opening; said symbol recordation means having associated therewith a symbol recordation web for permitting recordation of the operation of said keyboard operated device, said recordation web positioned adjacent said cover means and having a portion thereof over said opening, an intelligence presenting web positioned in the beam of propagated light between said light source and said recordation web, whereby intelligence from said intelligence presenting web may be shadow transmitted through said opening, said cover means and said recordation web so that the operation of said device as indicated by said symbol recordation means upon said recordation means may be compared with said intelligence.

21. The improvement of a keyboard operated device for permitting use as a teaching machine as defined in claim 20 wherein said masking member is a hollow cylindrical core and said light transmitting cover means is a resilient cylindrical sleeve rotatably mounted about the outside surface of said core.

22. The improvement of a keyboard operated device for permitting use as a teaching machine as defined in claim 20 wherein said light transmitting cover means is movable relative to said masking member, and a gearing system is provided for relative movement of the same.

23. The improvement of a keyboard operated device for permitting use as a teaching machine as defined in claim 20 wherein said recordation web and said intelligence web are embodied in a single sheet of light transmitting material.

24. The improvement of a keyboard operated device for permitting use as a teaching machine as defined in claim 20 wherein said device is provided with a positioning means for positioning said intelligence web with respect to said symbol recordation means so that as said device is operated the recordation of the symbols from said recordation means corresponds to the presented intelligence upon said web.

25. In a keyboard operated device for producing recordation symbols the improvement for permitting use as a teaching machine comprising a slidable carriage mounted upon said device, at least one gear housing mounted at an end of said carriage and at least one support member mounted at the other end of said carriage, a hollow core supported by said gear housing on one end and said support member on the other end thereof, a longitudinal slot disposed in said core at the symbol recording level, a light source disposed within said core, two conductor rods connecting said light source and said core to said gear housing and said support member respectively, an electrical power source serially connected between said two conductors rods for operating said light source, a light transmitting resilient sleeve rotatably mounted upon the outside surface of said core, a roller knob rotatably secured to said gear housing, a sleeve gear annularly disposed about the gear housing end of said sleeve, gearing means

for driving said sleeve gear through operating of said roller knob, and light control means for controlling propagation of light from said light source through said slot, whereby an intelligence web may be placed adjacent said cover sleeve over said slot and covered with a blank recordation web for recording the operation of said device to provide for comparison of this operation relative to symbols inscribed on said intelligence web to permit teaching the correct operation of said device.

26. In a keyboard operated device the improvement as defined in claim 25 wherein, said light control means comprises a U-shaped template attached by one end thereof to the right side of the base of said device and having the other end thereof disposed on the undersurface of said hollow core and aligned to cover that portion of said core slot which is disposed to the right of symbol recording position of said carriage, whereby said carriage may reciprocate relative to said template and said sleeve is rotatable about the surface of said hollow core.

27. In a keyboard operated device the improvement as defined in claim 25 wherein, said light control means comprises a carriage operated light switch serially connected between said light source and said electrical power source, said light switch operative to turn on said light source at a predetermined position of said carriage with respect to said device.

28. In a keyboard operated device the improvement as defined in claim 25 wherein the light control means comprises a template disposed within said hollow core, said template arranged for selectively covering said longitudinally disposed slot, at least one template arm rotatably securing said template to one of said two conductor rods, solenoid means for pivotally actuating said template arm, solenoid control means for actuating said solenoid relative to axial movement of said carriage.

29. In a keyboard operated device the improvement as defined in claim 25 wherein said light control means comprises a flexible template disposed on the undersurface of said hollow core to slidably cover portions of said slot, said template having a carriage end and a reel end, said template being compactly storable at said reel end, a spring system attached to said template for maintaining said carriage end of said template at a fixed position with respect to said device independent of movement of said carriage.

30. In a keyboard operated device the improvement as defined in claim 25 wherein said light control means comprises a flexible template having a portion thereof disposed on the undersurface of said hollow core and designed to slidably cover portions of said slot, said template having a carriage end and a reel end, a helical spring longitudinally disposed within said hollow core about said light source, said helical spring having one end thereof fixed relative to said hollow core and the other end thereof affixed to said carriage end of said template for resiliently urging said carriage end of said template to the left end of said slot, reel means attached to said typewriter base for the reeling of said flexible template into coil-type storage, a reel powering means for operating said reel means during the motion of said carriage to the left side of said typewriter base, and means for releasing said reel powering means when said carriage is returned to the right side of said typewriter base whereby said helical spring may force said flexible template to the right across said hollow core into the slot covering position.

31. A recording machine for allowing a respondent to record responses to presented intelligence, said machine comprising a nonrotatable housing with an opening therein, a light transmission means covering said opening, a light propagation means within said housing for propagating light through said light transmission means, said housing opening restricting the light transmitted to a small proportional area of said housing, a recordation web positioned to receive light from said propagation means and for allowing a respondent to record responses thereon, an intelligence web for controlling the light propagated from said light propagation means for projection of intelligence images, control means for controlling the presentation of a portion of said presented intelligence independently of variation of said light propagation means, said control means operable independently of movement of said intelligence web with respect to said light propagation means, and said light propagation means transmitting through said light transmission means for transmission of intelligence images and for transmission of said recorded responses from said recordation web to provide for viewing by a respondent, whereby a respondent may view said presented intelligence and said recorded responses with the images of one another.

32. A recording machine as defined in claim 31 wherein, said light propagation means consists of a tape operative television projector and said intelligence web consists of a video-tape for operating said projector.

33. A recording machine for allowing a respondent to record responses to presented intelligence within the image of the intelligence comprising, an intelligence presenting means, a recordation means for allowing a respondent to record responses to the presented intelligence, a light propagation means for combining for viewing by a respondent the images of the intelligence and the recorded responses, and a control means for controlling the presentation of a portion of said intelligence independently of variation of said light propagation means, said control means operable independently of movement of said intelligence presenting means with respect to said light propagation means.

34. A teaching machine for presenting programmed intelligence consisting of information, interrogatories and correct answers for the interrogatories and for allowing a student to record responses to presented intelligence within the image of the intelligence comprising, an intelligence presenting means, a recordation means for allowing a student to record responses to presented intelligence, a light propagation means for combining for viewing by a student the images of the intelligence and the recorded responses, and control means for controlling the presentation of a portion of said presented intelligence independently of variation of said light propagation means, said control means operable independently of movement of said intelligence presenting means with respect to said light propagation means.

35. A recording machine for allowing a respondent to record responses to presented intelligence within the image of the intelligence, said machine having a light source therein, comprising a first means for presenting intelligence, a second means for recording responses to said intelligence for viewing within the image of the presented intelligence, and a third means for controlling the presentation of a portion of said intelligence independently of variation of said light source, said third means operable independently of movement of said first means with respect to said light source.

36. In a recording machine for allowing a respondent to record responses to presented intelligence within the image of the intelligence, said machine having a light propagation means, intelligence presenting means and an exposed recordation web, the improvement comprising means for positioning said intelligence presenting means and said recordation web in the path of light from said light propagation means to superimpose the images thereof for viewing within the image of one another, and control means for controlling the presentation of a portion of said intelligence independently of variation of said light propagation means, said control means operable independently of movement of said intelligence presenting means with respect to said light propagation means.

37. In a teaching machine for presenting intelligence comprised of information, interrogatories and correct answers for the interrogatories, said machine having light propagation means, intelligence presenting means and an

exposed recordation web, the improvement comprising means for positioning said intelligence presenting means and said recordation web in the path of light from said light propagation means to superimpose the images thereof for viewing within the image of one another, and control means for controlling the presentation of a portion of said intelligence independently of variation of said light propagation means, said control means operable independently of movement of said intelligence presenting means with respect to said light propagation means.

38. A recording machine having a keyboard for allowing a respondent to type responses to presented intelligence within the image of correlated intelligence, said machine having a light source therein, comprising a first means for presenting intelligence, a second means for recording responses to said intelligence for viewing within the image of said intelligence, a third means for printing of characters on said second means by operation of said keyboard, and a fourth means for controlling the presentation of a portion of said intelligence independently of variation of said light source, said fourth means operable independently of movement of said first means with respect to said light source.

39. The recording machine of claim 38 including a fifth means for housing said light source and restricting the light transmitted therefrom to a small proportional area thereof.

40. A teaching machine having a keyboard for presenting intelligence comprised of information interrogatories and correct answers for the interrogatories, said machine

having a light propagation means and a housing therefor, comprising a first means for presenting intelligence, a second means for recording responses to said intelligence, said first and second means positioned in the path of light from said light propagation means to superimpose the images thereof for viewing within the image of one another, a third means for printing characters on said second means by operation of said keyboard and a fourth means for controlling the presentation of a portion of said intelligence independently of variation of said light propagation means, said fourth means operable independently of movement of said first means with respect to said light propagation means.

41. The teaching machine of claim 40 wherein said housing restricts the light transmitted from said light propagation means to a small proportional area thereof.

References Cited by the Examiner

UNITED STATES PATENTS

1,499,582	7/24	Laguionie	197—14
2,169,266	8/39	Matter	35—9
2,401,434	6/46	Mills	35—48
2,402,162	6/46	Holt	35—9 X
2,813,457	11/57	FitzGerald	35—76
2,835,052	5/58	Raich et al.	35—9

JEROME SCHNALL, *Primary Examiner.*

P. ARNOLD, L. SMILOW, GEORGE A. NINAS, JR., *Examiners.*