(No Model.)

6 Sheets—Sheet 1.

C. M. GREEN.

NAILING MACHINE.

No. 590,977. Patented Oct. 5, 1897.

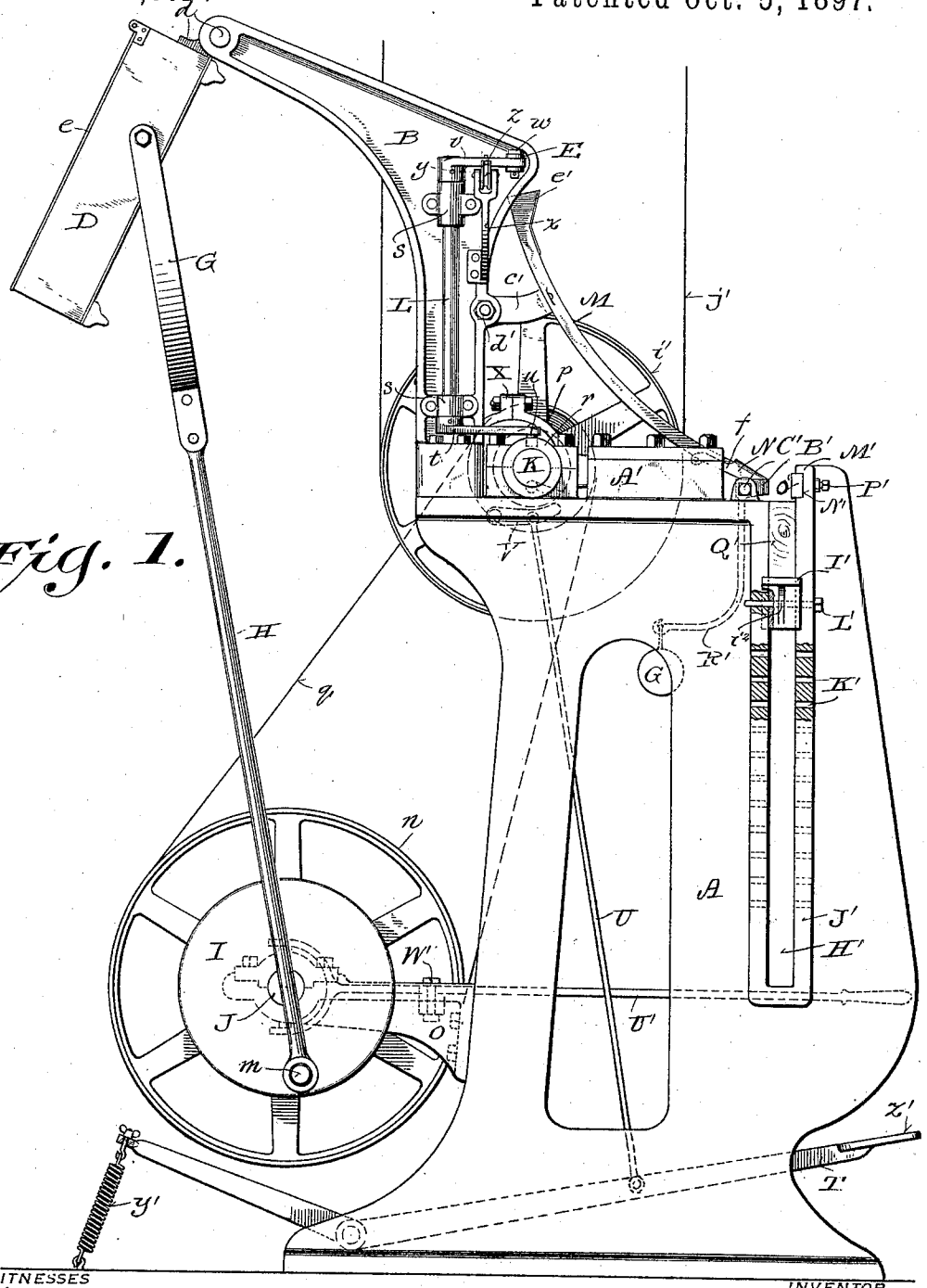

Fig. 1.

WITNESSES

Geo W Young

B. C. Roloff.

INVENTOR.

Charles M. Green

BY H. G. Underwood

ATTORNEY.

THE NORRIS PETERS CO., PHOTO-LITHO., WASHINGTON, D. C.

(No Model.)

6 Sheets—Sheet 2.

C. M. GREEN.

NAILING MACHINE.

No. 590,977. Patented Oct. 5, 1897.

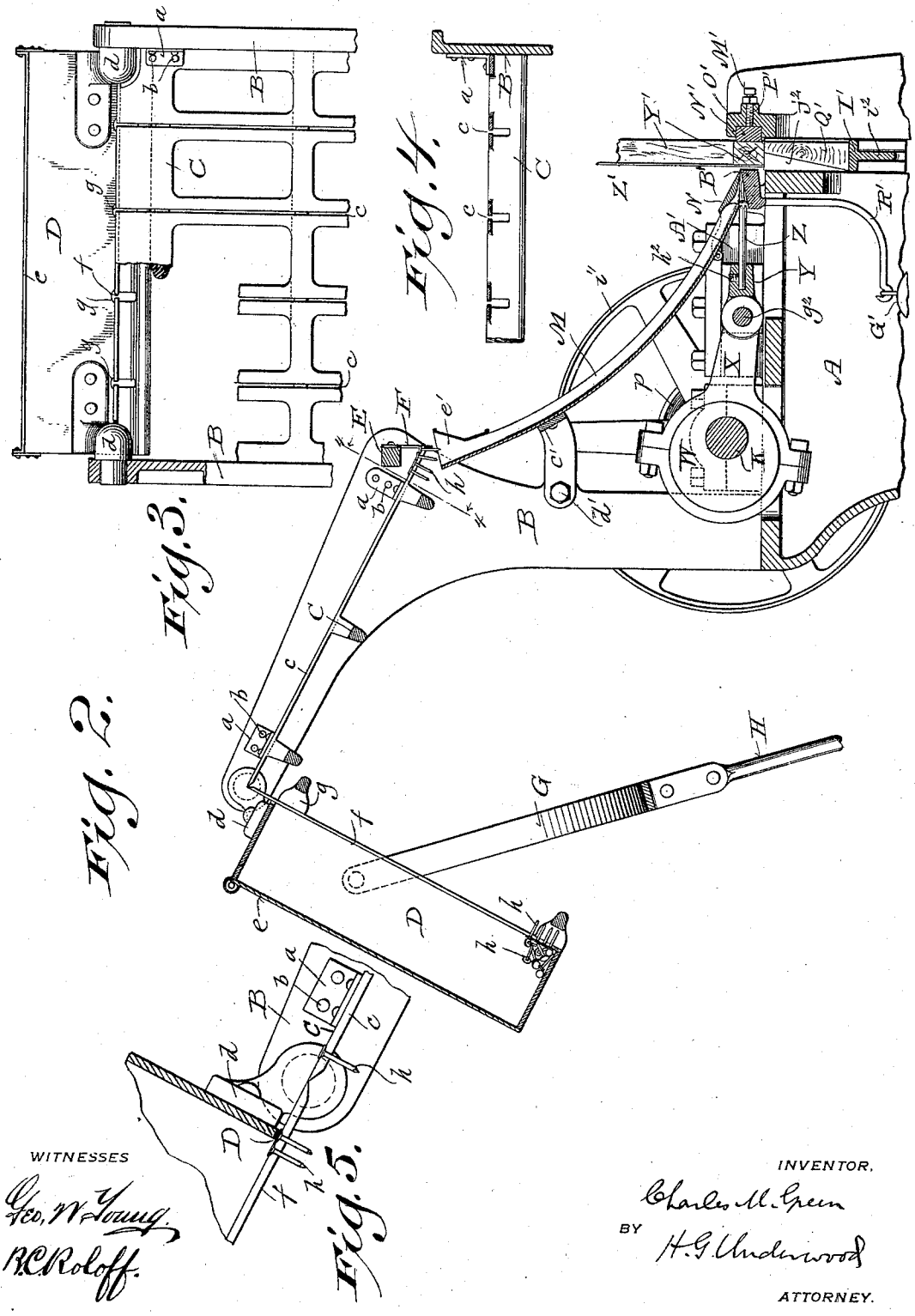

Fig. 2.

Fig. 3.

Fig. 4.

Fig. 5.

WITNESSES

Geo. W. Young.

R. C. Roloff.

INVENTOR,

Charles M. Green

BY H. G. Underwood

ATTORNEY.

THE NORRIS PETERS CO., PHOTO-LITHO., WASHINGTON, D. C.

(No Model.)

6 Sheets—Sheet 3.

C. M. GREEN.

NAILING MACHINE.

No. 590,977. Patented Oct. 5, 1897.

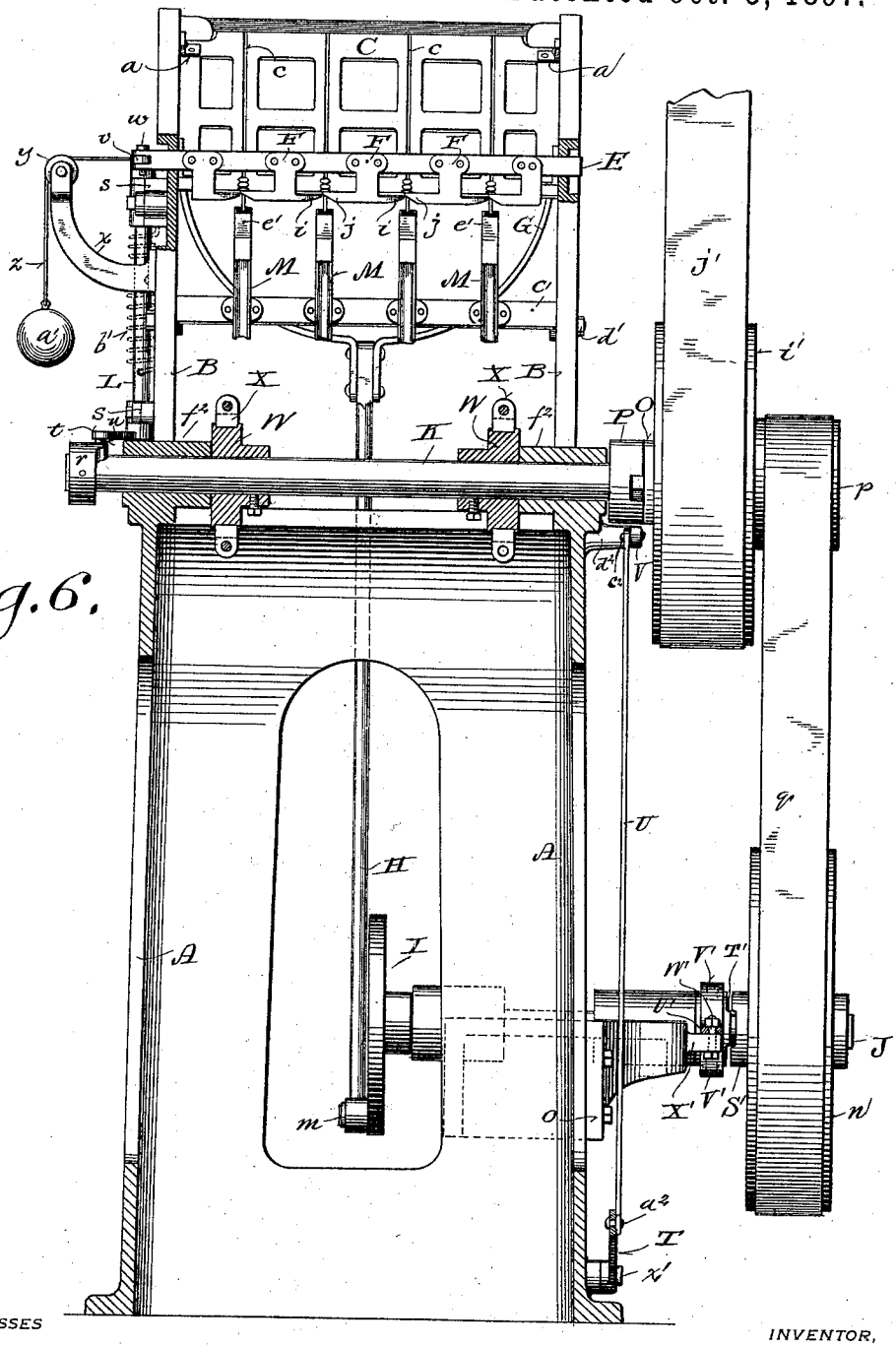

Fig. 6.

WITNESSES

Geo. W. Young.

R. C. Roloff.

INVENTOR,

Charles M. Green

BY H. G. Underwood

ATTORNEY.

THE NORRIS PETERS CO., PHOTO-LITHO., WASHINGTON, D. C.

(No Model.)

6 Sheets—Sheet 4.

C. M. GREEN.

NAILING MACHINE.

No. 590,977. Patented Oct. 5, 1897.

Fig. 7.

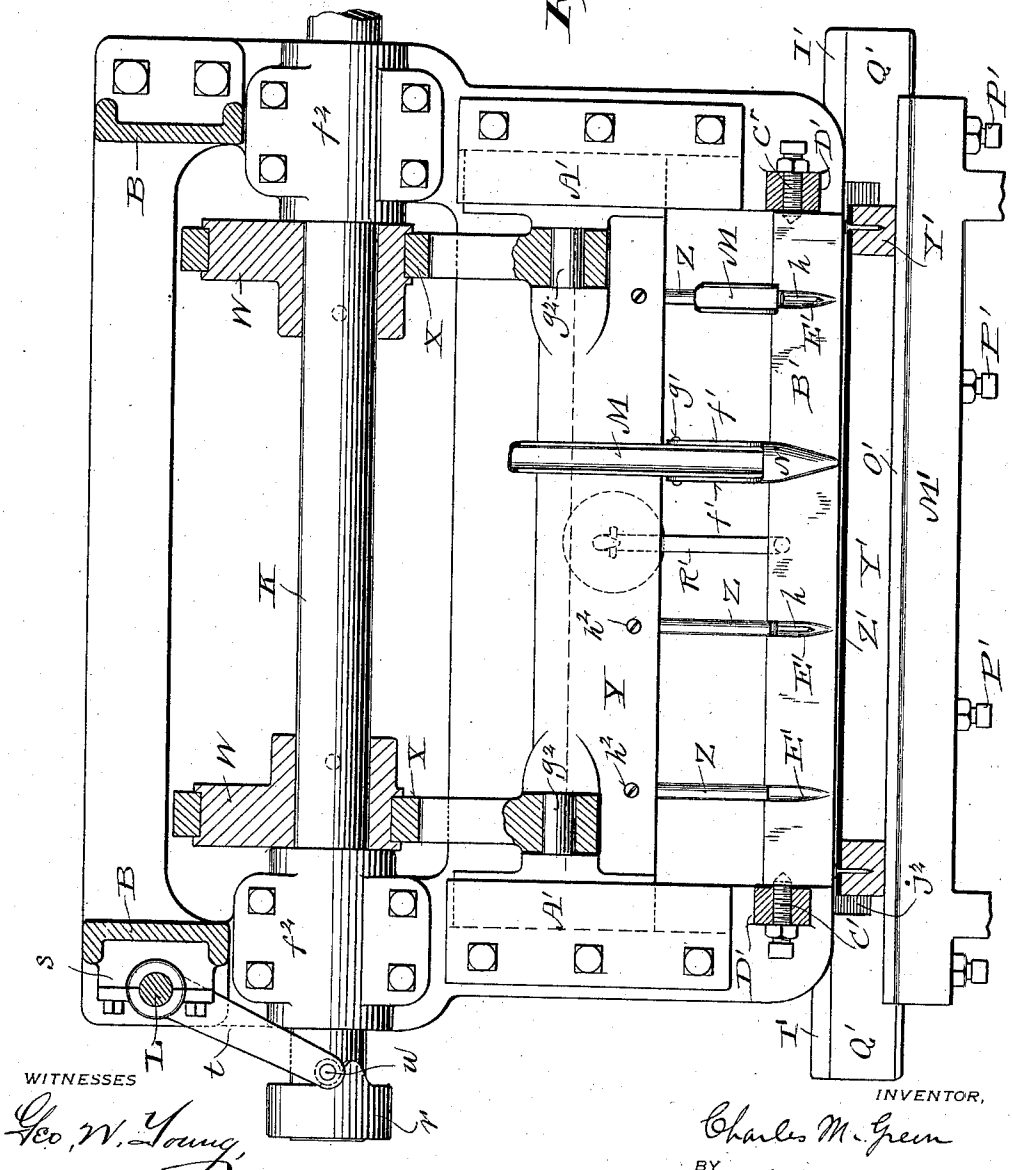

WITNESSES

Geo. W. Young,

B. C. Roloff.

INVENTOR,

Charles M. Green

BY

H. G. Underwood

ATTORNEY.

THE NORRIS PETERS CO., PHOTO-LITHO., WASHINGTON, D. C.

(No Model.)

6 Sheets—Sheet 5.

C. M. GREEN.

NAILING MACHINE.

No. 590,977. Patented Oct. 5, 1897.

Fig. 13.

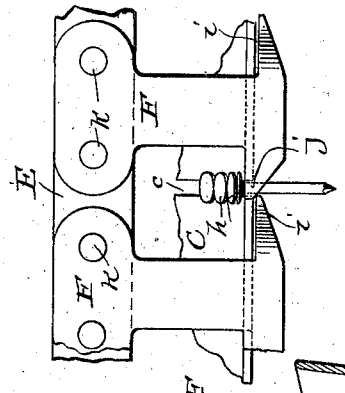

Fig. 15.

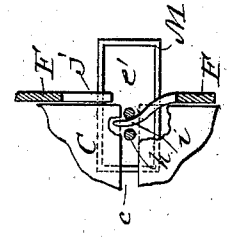

Fig. 12.

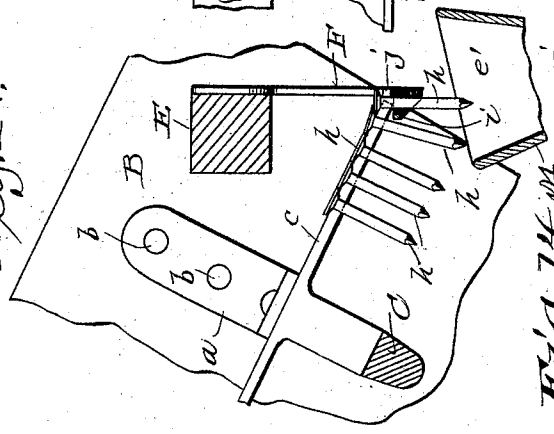

Fig. 14.

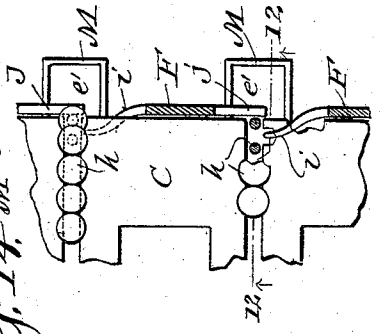

Fig. 11.

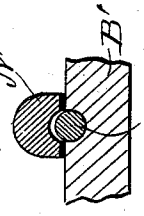

Fig. 8.

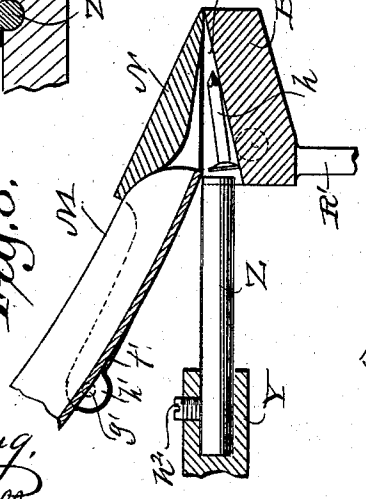

Fig. 9.

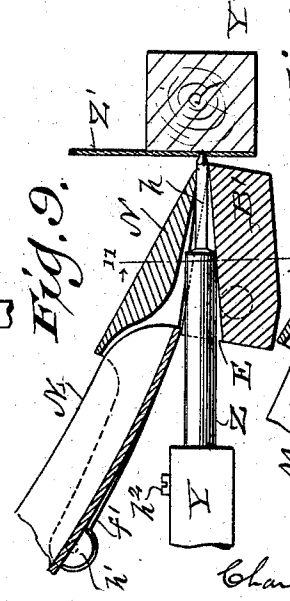

Fig. 10.

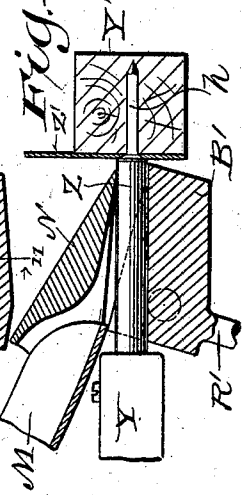

WITNESSES.

Geo. W. Young,

B. C. Roloff.

INVENTOR,

Charles M. Green

BY

H. G. Underwood

ATTORNEY.

THE NORRIS PETERS CO., PHOTO-LITHO., WASHINGTON, D. C.

(No Model.) 6 Sheets—Sheet 6.

C. M. GREEN.

NAILING MACHINE.

No. 590,977. Patented Oct. 5, 1897.

Fig. 21.

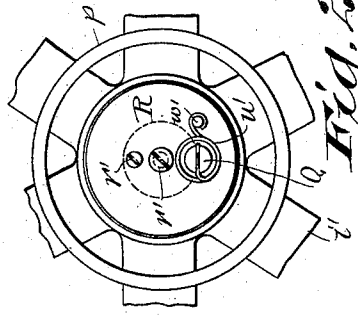

Fig. 22.

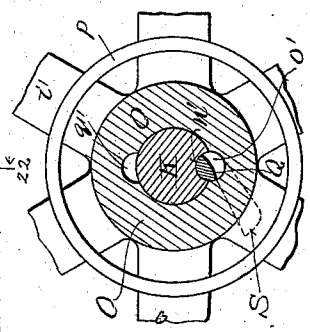

Fig. 19.

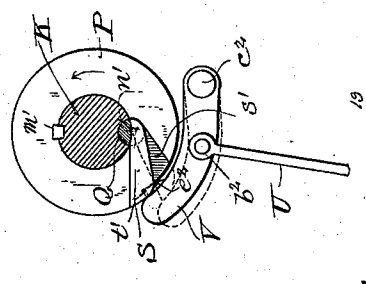

Fig. 20.

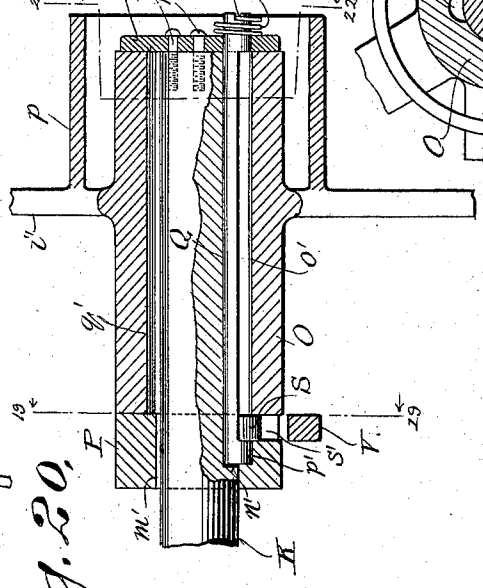

Fig. 16.

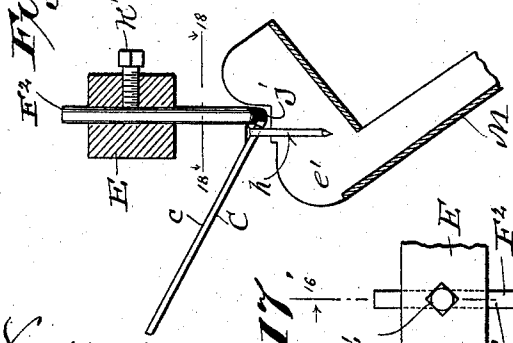

Fig. 18.

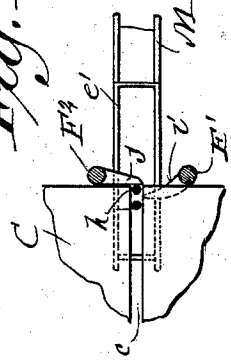

Fig. 17.

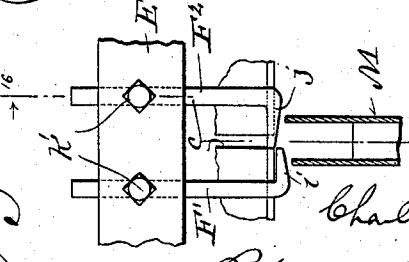

Witnesses;
Geo. W. Young,
W. C. Roloff.

Inventor;
Charles M. Green
By H. G. Underwood
Attorney

THE NORRIS PETERS CO., PHOTO-LITHO., WASHINGTON, D. C.

UNITED STATES PATENT OFFICE.

CHARLES M. GREEN, OF HIGHLAND PARK, ILLINOIS.

NAILING-MACHINE.

SPECIFICATION forming part of Letters Patent No. 590,977, dated October 5, 1897.

Application filed September 14, 1896. Serial No. 605,733. (No model.)

To all whom it may concern.

Be it known that I, CHARLES M. GREEN, a citizen of the United States, and a resident of Highland Park, in the county of Lake and State of Illinois, have invented certain new and useful Improvements in Nailing-Machines; and I do hereby declare that the following is a full, clear, and exact description thereof.

My invention has especial reference to that class of nailing-machines which are designed to nail together wooden frames, as in box-making and kindred arts; and it consists in certain peculiarities of construction and combination of parts, as will be fully set forth hereinafter and subsequently claimed.

In the drawings, Figure 1 represents a side elevation of the machine embodying my present invention. Fig. 2 is a central vertical section of the upper part thereof on an enlarged scale. Fig. 3 is an enlarged detail plan view of the upper nail-guides, partly broken away. Fig. 4 is a detail view on the line 4 4 of Fig. 2. Fig. 5 is an enlarged detail view showing the connection between the nail box and guides. Fig. 6 is a front elevation partly in section. Fig. 7 is a plan view of the nail feeding and driving mechanism, partly broken away and in section. Figs. 8 to 11 are enlarged detail views illustrating the driving of the nails, Fig. 11 being a sectional view on the line 11 11 of Fig. 9. Figs. 12 to 15 are enlarged detail views of one form of the nail-stripping devices, Fig. 12 being a sectional view on the line 12 12 of Fig. 14. Figs. 16 to 18 are similar views illustrating another form of nail-stripping devices, Fig. 16 being a sectional view on the line 16 16 of Fig. 17 and Fig. 18 being a sectional view on the line 18 18 of Fig. 16. Figs. 19 to 22 are enlarged detail views of the clutch that regulates the movement of the nail-driving mechanism, Fig. 19 being a sectional view on the line 19 19 of Fig. 21 and Fig. 22 a sectional view on the line 22 22 of the same figure.

Referring by letter to the drawings, A A represent the upright side pieces of the main supporting-frame, connected by suitable front, rear, and upper portions. Rising from the rear of this frame are the side frames B B, which support between their upper ends the inclined bed C, containing the nail-grooves *c c*, said bed being connected to the side frames B B in any suitable way, as by angle-plates *a* and bolts *b*.

D is the nail-box, provided with hinge-bolts *d d*, by which it is pivotally secured to the upper extreme ends of the side frames B B. This box has a hinged top *e* and slots *f f* in its bottom, which coincide with the nail-grooves *c c* in the bed C, and in its end adjacent to said bed there are openings *g* on the line of the slots *f* to enable the nails *h* to pass therethrough and into the grooves *c c*. The slotted bottom of the box D projects beyond its end piece and meets the projecting end of the bed C, so that there may be no interruption to the passage of the shanks of the nails *h* between the walls of the slots *f* in the box D and grooves *c* in the bed C, as best shown in Fig. 5.

E is a bar supported by the side frames B B and sliding through slots therein, as shown in Fig. 6, which bar carries the nail-stripping devices F F. I have shown two forms or styles of these stripping devices, one form being illustrated in Figs. 2 and 6 and in detail in Figs. 12 to 15, inclusive, while another form is illustrated in detail in Figs. 16 to 18, inclusive, but their operation is the same. In the form first illustrated I show a single arm with oppositely-projecting fingers *i j* at its lower end, while in the latter form I show separate arms, (marked F' F^2,) one carrying the finger *i* and the other the finger *j*. In the first form the arms F are secured by bolts *k* to the bar E, while in the second form the arms F' F^2 pass up through slots in the bar E, and are hence capable of separate adjustment when desired, being held in place by means of set-screws *k'*. In the organized machine the arms F at each end of the bar E have each only one finger, as shown in Fig. 6.

G is a bail whose upper ends are pivotally secured to the sides of the nail-box D, and which is connected to a rod H, whose lower end is connected to a crank-pin *m* on a disk I, fast on one end of a shaft J, whose other end carries a pulley *n*. This shaft is journaled in a box *o*, secured to the main supporting-frame. K is another shaft journaled in suitable bearings on the top of said main frame, which shaft carries at one end (on a clutch-sleeve O, hereinafter described) a pulley *p*, connected to the just-described pulley

n by a belt q. The opposite end of this shaft carries a cam-wheel r. L is a vertical shaft supported in suitable bearings or boxes s s on one of the described side pieces B of the upper frame. The lower end of this shaft L has fast thereon a crank-arm t, whose free end carries a crank-pin u for engagement with the cam-wheel r on the shaft K. Fast on the upper end of the shaft L is another crank-arm v, whose farther end is received in the adjacent forked end of the described sliding bar E and pivotally secured thereto by pivot-bolt w. It is necessary, of course, to keep the crank-pin u always against the cam-wheel r, so that the sliding bar E may be operated back and forth by the revolution of said cam-wheel, and this may be accomplished in either one of two ways—viz., by a weight or by a spring, both of which are shown in Fig. 6. For the former plan I provide a bracket x, secured to and projecting from the adjacent side piece B of the upper frame, said bracket carrying a grooved pulley y at its upper end for the reception of a cord, wire, or chain z, secured to the upper crank-arm v, and after passing over said pulley y receiving a weight a' at its lower end. The other means is a stiff spiral spring b', surrounding said vertical shaft L, as shown in dotted lines in Fig. 6, the upper end of this spiral spring being fast to the upper box s of the shaft L and the lower end of said spring being fast to said shaft.

M M designate the nail-chutes, which are supported adjacent to their upper ends by means of a transverse bar c', to which they are bolted, the ends of this bar being bent backward and secured to the side pieces B by bolts d', as best shown in Figs. 2 and 6. These chutes M correspond in number and location to the nail-grooves c in the described bed C, and have funnel-shaped tops e' to receive the nails h as they are stripped and drop from the grooves c, and pivoted guide-shoes N, partially covering their lower ends, but otherwise are open at top their entire length. The funnel-shaped tops e' may be variously shaped, as found best adapted for the reception of any particular style of nail being employed, one shape being shown in Figs. 1 and 2 and another shape being shown in Fig. 16. The guide-shoes N project for a considerable distance forward beyond the lower ends of the nail-chutes M and have backward-extending straps f' f', which pass along the sides of the lower ends of the chutes M and are pivotally secured, as shown at g', to lugs or ears h' on the said chutes.

The clutch-sleeve O, hereinbefore referred to, carries integral or rigid therewith not only the end pulley p, already named, but a larger pulley i', which receives the main driving-belt j', the details of the clutch mechanism being illustrated in Figs. 19 to 22, both inclusive. Mounted on the shaft K, close to the adjacent end of the clutch-sleeve O, is the other clutch member P, held to the shaft K by a key m', the said shaft being bored out, leaving a semicircular opening n' from a point within the limits of the clutch member P out to the extreme end of said shaft. The clutch member P and clutch-sleeve O are similarly bored out longitudinally, as shown at o' p', and the sleeve O has a corresponding longitudinal semicircular bore q' opposite its bore o', both bores communicating with the central longitudinal bore of the sleeve O, which receives the shaft K. Within the bore n' in the shaft K there is slipped a mutilated key Q, whose ends are round, one end filling up the bore p' in the clutch member P, (and the end of the bore n' in the shaft K, adjacent thereto,) while the other full end of said key is journaled within a round opening in an end plate R, secured to the end of the shaft K and forming a longitudinal stop for the sleeve O. Near its inner end this key Q carries a dog S, which has play within a groove s' in the adjacent face of the clutch member P, and between this dog and the opposite rounded end of the key Q the latter is cut away its entire length on a line corresponding to the arc of the circle of the shaft K. Further than this, the periphery of the clutch member P is reduced in diameter adjacent to the groove s', so as to leave a sharp shoulder t', as shown in dotted lines in Fig. 19, back of the dog S in that figure. The mutilated key Q is normally held up in the position shown in Figs. 19 and 20, with its reduced portion completing the periphery of the shaft K, by means of a spring u', one end of which spring fits within a transverse cut v' in the outer end of the key Q, and the other end of which spring is secured to a pin w' on the end plate R.

T is a foot-lever, formed of a continuous bar, bent beyond the center, so as to have a long and short arm, and pivotally secured at the bent point by a pivot-bolt x' to a lug near the base of the main frame. Both arms incline upward from this point, the short arm being secured by a stout spring y to the floor or platform on which the machine rests and the long arm terminating in a foot-tread z'. About midway of the long arm there is secured by a pivot-bolt a^2 the lower end of a rod U, whose upper end is pivotally secured, as shown at b^2, to a dog V, which in turn is pivotally secured, as shown at c^2, to a lug d^2, which projects from one of the side pieces A of the main frame. This dog V carries a stop e^2 for engagement with the described shoulder t' in the periphery of the clutch member P, as hereinafter explained.

The shaft K has fast therewith, just inside its bearings or boxes f^2 f^2 on the upper part of the main frame, eccentrics W W, having eccentric-straps X X secured around them, the forward ends of said straps receiving the trunnions or studs g^2 g^2 of the slide Y, that carries the drivers Z. This driver-slide Y moves within grooved guide-blocks A' A' on the upper part of the main frame, and the

drivers Z are held in place by being inserted in mortises cut in the front wall of said slide and secured therein by set-screws h^2 h^2. Just in front of the driver-slide Y is a tilting nail-guide bar B′, suspended between fulcrum-points C′ C′, (said points being preferably in the form of screw-bolts passing through blocks D′ D′ on the upper part of the main frame for nicety of adjustment,) which engage the said tilting bar B′ back of its central longitudinal line, and which bar is provided with transverse-pointed guiding-grooves E′ E′ for the reception and guidance of the nails *h* as they leave the chutes M, the forward ends of said chutes resting on said bar B′ in line with said grooves E′, and the shoes N covering said grooves. This bar B′ is counterbalanced by means of a downward and rearward extending hook-bar R′, secured adjacent to the lower rear edge of said bar B′ at its center and carrying a weight G′.

The side pieces A A of the main frame are provided with vertical slots H′ for the reception of a movable supporting-table I′, the said frame-pieces along the lines of the said slots H′ being formed with projecting portions J′, having transverse perforations K′ therethrough for the reception of pins or bolts L′, passed through said perforations and through like perforations in the vertical web i^3 of the table I′, so that said table may be held at any elevation to which it may be adjusted. The upper front portion M′ of the main frame projects above the plane of the top of said frame and is provided with a transverse groove N′ along its rear side for the reception of a beam O′ in line with the adjacent front edge of the tilting bar B′, and this beam O′ is secured in place by screw-bolts P′.

The table I′ is designed to receive blocks Q′, which are cut away, as shown at j^2, intermediate of their ends.

Referring again to the shaft J, its pulley *n* is supported on a clutch-sleeve S′ on said shaft for engagement, when desired, with a clutch T′ by means of an ordinary clutch-operating lever U′ with forked ends V′ V′ and pivoted, as shown at W′, to a lug X′ on the box *o*, as best shown in Fig. 6 and by dotted lines in Fig. 1, to stop the operation of the machine when desired.

In the operation of the machine to be now described the reference-letter Y′ is used to designate the frame-timbers of a box and the reference-letter Z′ to designate the covering to be nailed to said frame.

The operation of the machine will be readily understood from the foregoing description of its construction, taken in connection with the accompanying drawings.

Let it be understood that a quantity of nails *h* have been put in the nail-box D and the hinged top *e* securely closed. Then with every revolution of the shaft J (driven by power-belt *j′* through pulleys *i′ p*, belt *q*, and pulley *n*) the disk I will revolve, carrying with it the crank-pin *m*, and thus actuating rod H, bail G, and nail-box D. As the latter comes up from the position shown in Figs. 1 and 2 to the position shown in Fig. 5 the shanks of the nails *h h* will be shaken first into the slots *f f* in the bottom of said box D, and thence will slide along through the openings *g g* and into the nail-grooves *c c* in the bed C, and will travel along said grooves and drop into the funnels *e′* of the chutes M. It is here that the stripping operation takes place. With every revolution of the driving-shaft K the cam-wheel *r* on the end thereof, by reason of its engagement with the crank-pin *u* on the lower crank-arm *t* of the vertical shaft L, partly revolves said shaft L, and thus moves its upper crank-arm *v*, which actuates the sliding bar E, causing the stripping-fingers *i j* on the arms F (or F′ F^2) to alternately come between the shanks of the adjacent nails *h* beneath the heads of the nails, as shown in Figs. 12 to 18, inclusive, and then with each reciprocation of the bar E one nail in each groove *c* will be freed from the finger of the stripping device and be permitted to drop down into the funnel of the adjacent chute M and slide along the latter to and into the groove E′ of the tilting bar B′, as shown in Figs. 7 and 8. At this stage it is to be understood that the frame Y′ and covering Z′ of a box-section (in the illustration given) are in position on the beam Q′ on table I′, as shown in Fig. 2.

The driving-shaft K only revolves when the clutch-sleeve O is in engagement with the clutch member P, as presently described, the said part P being rigidly keyed to the shaft K, but the sleeve O being normally freely revolved on said shaft by the power-belt *j′* by reason of the mutilated key Q being held up in peripheral line with said shaft K, as shown in Figs. 19 and 20, which is accomplished (against the tendency of the spring *u′* in the notched end *v′* of said key) by reason of the spring *y′* holding the lever T, and consequently the rod U and dog V, in the position shown in Fig. 1. The said dog V bears up against the dog S on the key Q and holds its end in line with the periphery of the clutch member P, as shown in Fig. 19. As long as the key Q is thus held up the shaft K will be idle and the revolution of the pulleys *i′ p* on the disengaged clutch-sleeve O on said shaft will merely, as described, actuate the nail-box D and keep sending the nails *h* into the grooves *c c* in the bed C, but the nails will not be stripped off and allowed to drop into the chutes M until the shaft K is revolved by the engagement of its clutch member P and clutch-sleeve O in the nailing operation to be next described. In order to nail the said pieces Y′ and Z′ together, (said pieces being preferably first slightly secured or tacked at the corners, though this is not absolutely necessary,) the operator presses his foot upon the foot-tread *z′* of lever T. This action, through rod U, draws down the dog V and releases its stop e^2 from engagement with the shoulder *t′*

in the periphery of the clutch member P and also permits the dog S on the mutilated key Q, which was held up by the dog V, to be forced down to the position shown in dotted lines in Fig. 19 by the force of the spring u', this position being also shown in full and dotted lines in Fig. 22. This causes an engagement of the clutch member P and clutch-sleeve O, and consequently causes the revolution of the shaft K. As this shaft revolves the eccentrics W W force the driver-slide Y forward coincidently with the stripping of a single nail at each chute M, and these nails slide down into the grooves E' in the tilting bar B' just as the drivers Z come up against the heads of the nails, as shown best in Figs. 7 and 8. The nails, as they fall, point upward, owing to the incline of the bar B', but the continued forward movement of the drivers Z overcomes the force of the weight G' and brings the nails h to a horizontal position, as shown in Fig. 9, and then as the drivers Z complete their forward stroke the nails are driven through the covering Z' and into the frame Y' of the box, as shown in Fig. 10, all the nails being thus simultaneously driven at once along the entire length of the bar B'.

Should it happen that more than one nail be stripped off and fall down one of the chutes M at any time, the surplus nail can be readily removed by raising the shoe N of said chute, and while ordinarily this will not happen, still, as the shoes are all hinged by their straps f' they can be raised and the condition of the machine examined at any time, and any broken or extra nails that may pass under the shoes and not be driven into the work being nailed will drop down into the space j^2, where the blocks Q' are cut away.

Having thus described my invention, what I claim as new, and desire to secure by Letters Patent, is—

1. In a nailing-machine, the combination of a rigid frame and a bed supported thereby, and having a series of nail-grooves therein, a series of chutes arranged in line with said nail-grooves, a transversely-disposed counterbalanced grooved tilting bar journaled in said rigid frame and supporting the forward ends of said chutes, and a series of reciprocating drivers arranged beneath and in line with the lower ends of said chutes.

2. In a nailing-machine, the combination of a rigid frame and a bed supported thereby and having a series of nail-grooves therein, a series of chutes arranged in line with said nail-grooves, a transversely-disposed counterbalanced grooved tilting bar journaled in said rigid frame and supporting the forward ends of said chutes, a transverse bar carrying arms provided with laterally-projecting stripping-fingers arranged so that oppositely-disposed fingers shall project in front of and just at the end of said nail-grooves, reciprocating drivers arranged beneath and in line with the lower ends of said chutes, and mechanism, substantially as described, for reciprocating said transverse bar and said drivers simultaneously so that a single nail from each groove shall be stripped off and permitted to drop down and travel through each chute coincidently with the forward movement of said drivers.

3. In a nailing-machine, the combination with a rigid frame, carrying a bed provided with a series of nail-grooves therein, of a transverse driving-shaft mounted in said frame, and a transverse reciprocating bar supported by said frame, and carrying arms having stripping-fingers projecting from opposite directions toward said nail-grooves, a cam-wheel on the outer projecting end of said driving-shaft, a partly-revoluble vertical shaft mounted on said frame, a crank-arm fast on the upper end of said vertical shaft and pivotally connected to said transverse reciprocating bar, another crank-arm fast on the lower end of said vertical shaft, a depending crank-pin on the free outer end of this lower crank-arm in engagement with the cam-wheel on the driving-shaft, and means for restoring the said vertical shaft to its original position after each partial revolution thereof, whereby at each reciprocation of said bar the finger that held the lowest nail in each of said grooves will be withdrawn to allow said nail to drop just as the oppositely-disposed adjacent finger moves past the shank of the next nail in the groove, and keeps it from dropping until the said reciprocating bar makes its return movement.

4. In a nailing-machine, the combination of a rigid frame, a transversely-disposed counterbalanced grooved tilting bar journaled therein, a series of nail-chutes whose forward ends rest on said bar in line with the grooves therein, guideways supported on said frame back of said tilting bar and a reciprocating slide moving in said guideways and carrying drivers adapted to travel under said chutes in line with the grooves in said tilting bar.

5. In a nailing-machine, a series of nail-chutes each having a funnel-shaped top, and a shoe hinged directly to said chutes and covering and projecting beyond the lower or forward end, said chutes being open troughs between the said funnel and shoe.

In testimony that I claim the foregoing I have hereunto set my hand, at Chicago, in the county of Cook and State of Illinois, in the presence of two witnesses.

CHARLES M. GREEN.

Witnesses:
C. B. EYER,
K. R. SMOOT.