US 20020009517A1

(19) **United States**

(12) **Patent Application Publication** (10) **Pub. No.: US 2002/0009517 A1**

DEGADY et al. (43) **Pub. Date: Jan. 24, 2002**

(54) **CONTINUOUS COATING OFCHEWING GUM MATERIALS**

(76) Inventors: **MARC DEGADY**, MORRIS PLAINS, NJ (US); **MILES VAN NIEKERK**, MADISON, NJ (US)

Correspondence Address:
PFIZER, INC.
201 TABOR ROAD
MORRIS PLAINS, NJ 07950 (US)

(*) Notice: This is a publication of a continued prosecution application (CPA) filed under 37 CFR 1.53(d).

(21) Appl. No.: **09/374,935**

(22) Filed: **Aug. 16, 1999**

Publication Classification

(51) **Int. Cl.**[7] **A23G 3/30**

(52) **U.S. Cl.** **426/5**; 426/302; 118/13

(57) **ABSTRACT**

A continuous coating process for chewing gum and bubble gum materials. Small cores or pieces of gum material are introduced into inclined rotating drums in which heated air is circulated and a coating solution is applied (liquid or powder). The coating material is dried on the pieces of material, and a plurality of thin layers are formed on each of the cores or small pieces of material. A series of rotating drums can be provided to provide the requisite number or thickness of coating layers. In an alternate embodiment, initial coatings of material can be provided on the cores by a batch-type process before the materials are introduced into the continuous coating drums. The formulas for the coating solution can also be adjusted at different stages of the coating process in order to provide a more consistent and uniform coating.

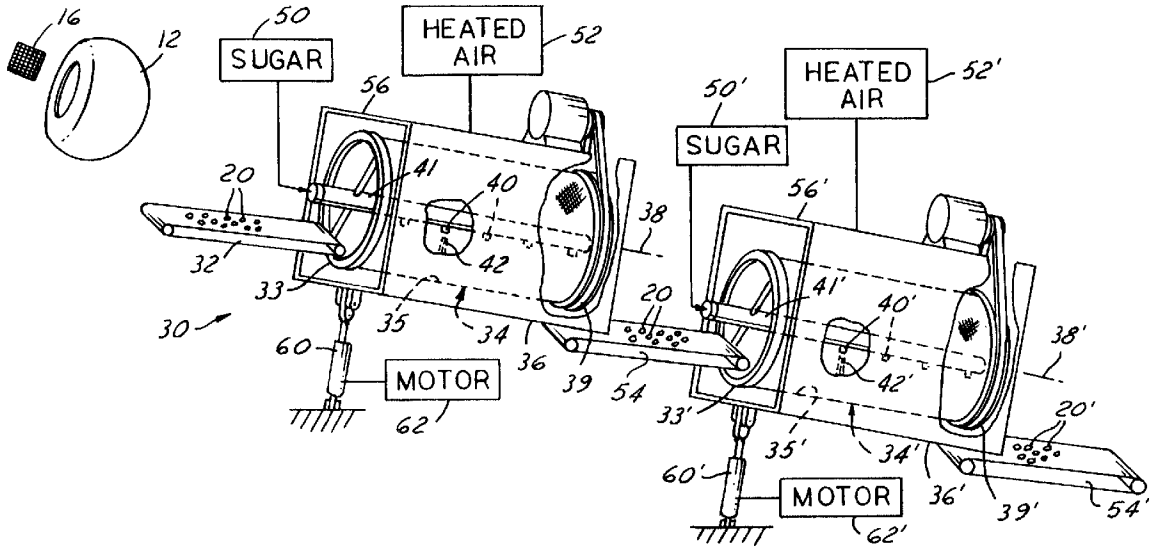

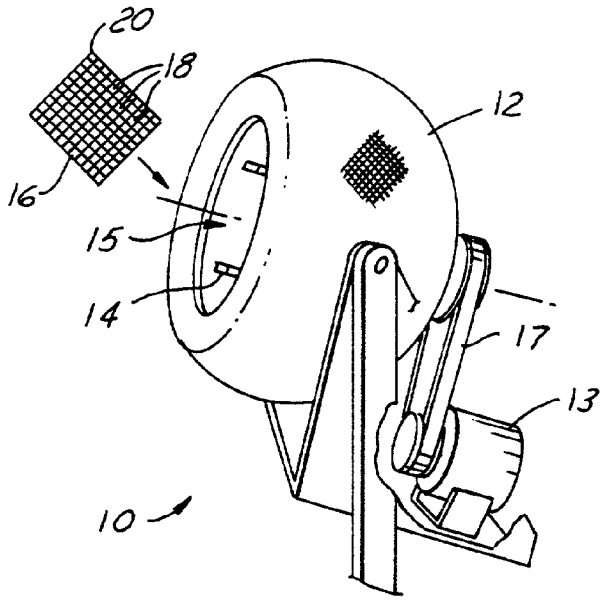

(PRIOR ART)

FIG.1

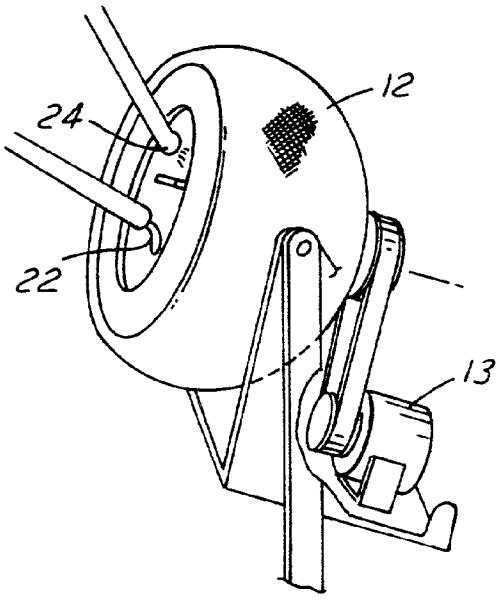

(PRIOR ART)

FIG.2

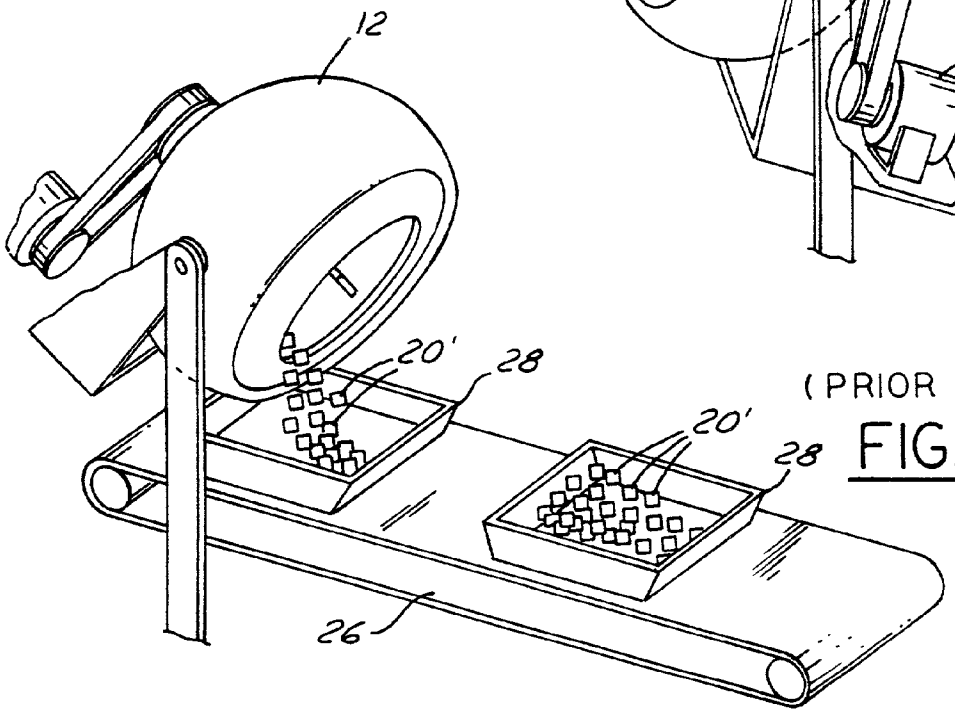

(PRIOR ART)

FIG.3

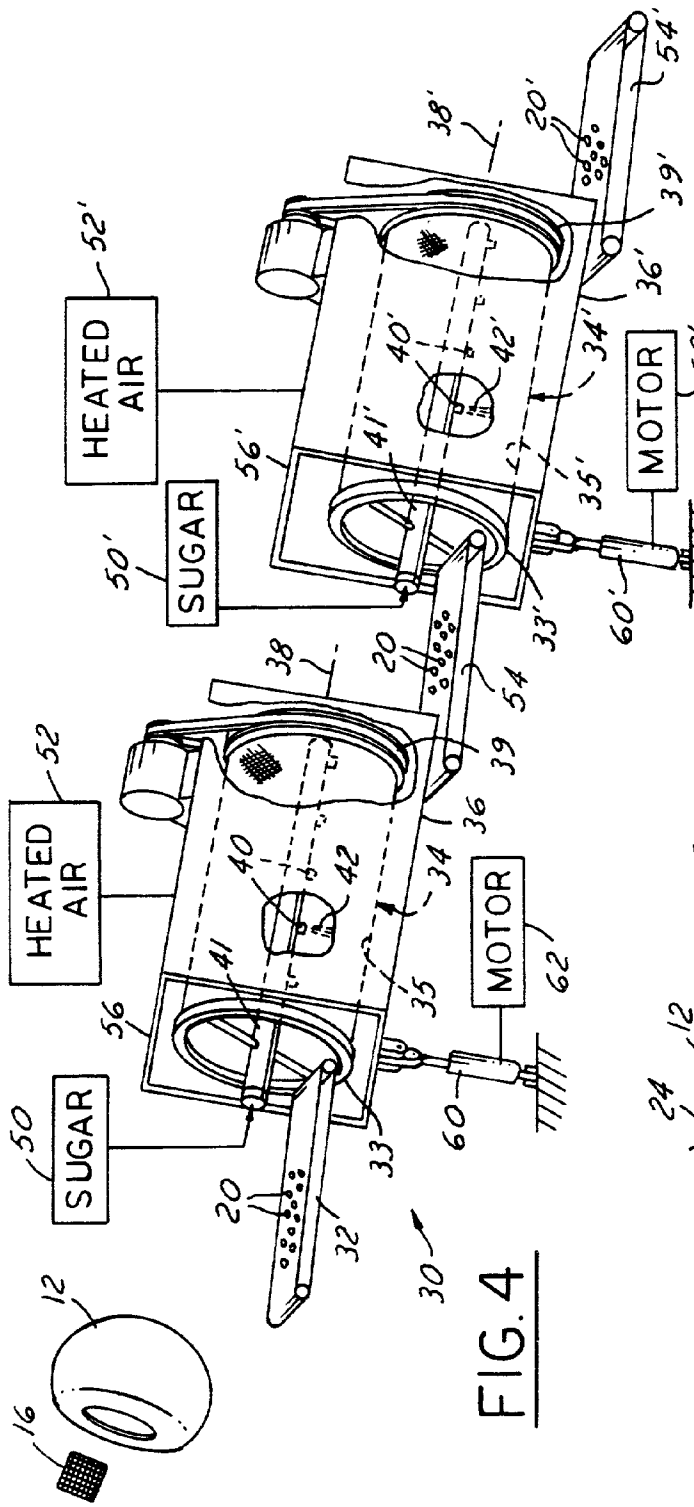

FIG. 4

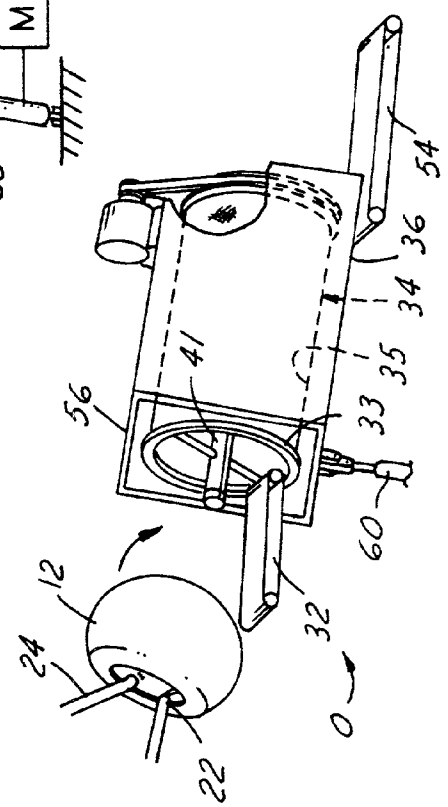

FIG. 5

CONTINUOUS COATING OFCHEWING GUM MATERIALS

TECHNICAL FIELD

[0001] The present invention relates to the continuous coating of pieces or cores of a gum material, such as chewing gum or bubble gum. The gum cores are spray coated in rotating drums while being heated and dried.

BACKGROUND OF THE INVENTION

[0002] There are numerous known coated chewing gum and bubble gum products. One of these products is the Chiclets brand chewing gum manufactured by Warner-Lambert Company. Traditionally, coated chewing gum and bubble gum products are produced by time-consuming and labor intensive batch-type manufacturing processes.

[0003] For batch-type processes, large rotating containers are utilized to coat the gum cores or pieces. Initially, the gum material is produced by a standard extrusion or batch processes and formed into large thin sheets of material several inches or a foot or more in width. Separation lines are pressed or formed into the sheets of gum forming the shapes of the smaller pieces (a/k/a "cores") of gum, and then the sheets may be stored in a cooler or under a cooled atmosphere in order to condition them for further processing.

[0004] Pursuant to the current batch-type processes used to coat the gum cores, the sheets of gum material are dumped into rotating mixers where they are separated and broken up into separate cores by a tumbling process. Thereafter, a coating solution, such as a sugar syrup, is added to the mixer while the mixer is rotating. Hot air at a temperature of approximately 120° F. is used to dry the coated cores.

[0005] In order to form a uniform and consistent coated gum product with a coat of the desired thickness, this process is repeated numerous times until the requisite coating is completed. In order to make an acceptable coating, this process can be repeated up to 40-50 times with small, thin layers being added each time. This process can take up to 6-7 hours to complete and is labor-intensive.

[0006] In the same manner, it is also possible to add a final wax coating to create a shiny surface on the coated gum products. Once all of the coating layers are completed, the coated pieces of gum are transferred to another station or area where they are assembled and packaged in a conventional manner.

[0007] It is an object of the present invention to provide an improved coating process for chewing gum and bubble gum products. It is another object of the present invention to reduce the time and labor currently required to produce coated gum products.

[0008] It is a further object of the present invention to provide a process which continuously coats pieces or cores of gum material. It is a still further object of the present invention to produce coated chewing gum and bubble gum products which are produced in a faster, less expensive, and more efficient manner than current batch-type processes.

[0009] These and other objects and purposes of the present invention will become apparent from the following description of the invention, when viewed in accordance with the attached drawings and appended claims.

SUMMARY OF THE INVENTION

[0010] The present invention provides an improved coating process for chewing gum and bubble gum products. The small cores or pieces of gum material are introduced into one or more rotating cylindrical drums which are tilted with respect to a horizontal plane. A series of spray nozzles which extend into the drum lightly coat the cores of material with a sugar solution. A continuous flow of heated air is circulated through the drums and dries the coating solution on the gum cores at the same time that the material is being coated. Where a series of drums is provided, conduits or conveyors are utilized to interconnect the drums and transport the material being coated from one drum to the other.

[0011] The formulas for the coating solution can also be adjusted at different stages of the coating process in order to provide a more consistent and uniform coating. The present invention coats chewing gum and bubble gum products in a faster, less expensive, and easier manner than processes known today, and for securing a more consistent and uniform coating.

[0012] In an alternate process, a batch-type container can be utilized to place one or more initial coating layers on the cores or pieces of gum material before they are introduced into the rotating drums.

[0013] Further objects, benefits and features of the present invention will become apparent upon a review of the following description, especially when viewed in accordance with the attached drawings and appended claims.

BRIEF DESCRIPTION OF THE DRAWINGS

[0014] FIGS. **1-3** schematically illustrate a prior art batch-type process;

[0015] **FIG. 4** schematically illustrates a coating process in accordance with the present invention; and

[0016] **FIG. 5** schematically illustrates an alternate process for coating gum products in accordance with the present invention.

BEST MODE(S) FOR CARRYING OUT THE INVENTION

[0017] The present invention is a significant improvement over known systems for manufacturing coated chewing gum and bubble gum products. In this regard, FIGS. **1-3** illustrate a representative batch-type process which is in use today to make coated gum products.

[0018] As shown in **FIG. 1**, the process **10** includes a large rotating basket-type mixing apparatus **12** (a/k/a "mixer"). The mixer **12** is adapted to be rotated by a motor **13** and associated drive mechanism **17** and may include a series of baffles or ridges **14** in the interior cavity **15** which are used to help tumble materials placed inside the mixer. Sheets of chewing gum or bubble gum material **16** which are produced in a conventional manner, are introduced into the mixer **12**. The gum material can be produced by any continuous extrusion or batch-type process and formed into large, flat sheets **16** which are then scored and may be placed in a cooling atmosphere a/k/a ("cooler") for conditioning. As

shown in **FIG. 1**, the sheets of material **16** have a series of score lines **18** which are pressed or formed into the sheet of material (in any conventional manner) and outline the individual cores or pieces of gum material **20**.

[**0019**] When the sheets of gum material **16** are introduced into the mixer **12**, the rotating of the mixer separates and breaks up the sheets of material into individual small cores of material **20**. The cores are sized to provide individual pieces of gum which, when coated, are packaged and then sold in the marketplace.

[**0020**] As shown in **FIG. 2**, sugar syrup **22** is added to the rotating mixer **12** in order to coat the pieces of material **20** which are being tumbled and rotated inside the mixer. The syrup **22** can be added by hand by being sprayed into the mixer through a spray nozzle or the like. Thereafter, hot air **24** is introduced into the rotating mixer in order to dry the coating syrup **22** which is coated on the cores of material **20**. The air is typically at an elevated temperature, such as 80-90° F., which dries the syrup on the gum material. The air utilized in the process can be exhausted in numerous ways, such as an enclosed exhaust chute (not shown), or by simply exhausting it into the room.

[**0021**] In order to provide a final coated gum material with an acceptable coating having the appropriate thickness and finish, the coating, tumbling, and drying procedures as shown in **FIG. 2**, are repeated as much as 40-50 times before the coated cores are completed. In this regard, a thin layer is built up on the cores of material **20** in each step of the process. In this manner, the coating builds up evenly on the pieces of material.

[**0022**] The batch-type coating of the gum material is labor intensive and, as indicated, involves three distinct processing steps (spraying, tumbling, and drying). The prior art process can take a total of 6-7 hours to complete the 40-50 steps.

[**0023**] Once the pieces of material **20'** are finish coated, they are dumped into individual pans **28**, as shown in **FIG. 3**, and sent to the packaging section or area by, for example, a conveyer system **26**, to be assembled into individual packages or boxes of gum material and then sent to the market.

[**0024**] For a shiny surface on the coated pieces of gum material, it is also possible to add a wax coating. For this purpose, the last of the numerous steps of the coating process utilizes a wax-base material rather than a sugar syrup material.

[**0025**] A second type of prior art process utilizes an elongated horizontal barrel in which the sheets of material are placed and follow a similar coating process. Rotation of the barrel separates the material into individual pieces, while a sugar sprayed into the center accompanied by a source of heated air coats and dries the pieces. The material remains in the barrel for numerous hours as the spraying and drying steps are repeated time after time until an appropriate thickness of coating is produced. A system for coating gum material in this manner is available from the Dumoulin company.

[**0026**] In accordance with the present invention, an apparatus system and method for continuously coating pieces or cores of chewing gum or bubble gum material is utilized. This system and apparatus is shown in **FIG. 4** and indicated generally by the reference numeral **30**.

[**0027**] In accordance with the present invention, the sheets of gum material **16** are first placed into a rotating drum or mixer **12** to tumble and break them up into individual pieces of material **20**. Individual cores or pieces of material **20** are then conveyed by a conveying mechanism **32** to the upstream or first end **33** of at least one rotating drum mechanism **34**. In this regard, the present invention can utilize either one rotating drum mechanism **34** or, as preferred, a series of two or more rotating drum mechanisms **34**, **34'**, as shown in **FIG. 4**. The number of individual drum mechanisms that are utilized in order to continuously coat the gum materials depends on a number of factors, such as the speed of the process, the thickness of the desired coating, and the quality of the finished product desired.

[**0028**] The drum mechanism **34** includes a frame **36** and a cylindrical drum member **35** rotatable about an axis **38** which is tilted with respect to a horizontal plane. The degree or angle of tilt also preferably is adjustable so that the length of time that the cores are in the drum member and number of layers or thickness of coating on each core of material can be adjusted as desired. For this purpose, extending support members **60** activated by motor **62** can be used to change the elevation of the drum mechanism.

[**0029**] In accordance with a preferred process and system of the present invention, the rotating drum member **35** is tilted or angled relative to the horizontal so that the cores of material **20** will enter and exit from the drum member in a uniform and consecutive manner. In this regard, a "first-in, first-out" system is preferred wherein the first cores of material which enter the inlet or first end **33** of the drum member are also the first cores of material to exit or leave the drum member. This will insure that all of the cores of material are treated uniformly and consistently and that the same amount of coating material and same thickness of coating will be applied to each core of gum material.

[**0030**] A series of spray nozzles **40** extend into each of the drum members **35** along their lengths and are used to spray a fine coating solution **42** onto the pieces or cores of gum material **20**, which are introduced into them.

[**0031**] Preferably, the drum includes a series of angled baffles, ridges or "rifling" (not shown) with flights which tumble the pieces of material **20** as they pass from the first end **33** to the outlet or exit end **39** of each of the drum members **35**.

[**0032**] A coating solution, such as a sugar syrup, is introduced into the drum **34** from a holding tank or container **50**. The coating solution preferably has about 60-70% sugar, 30-35% water and various small percentages of other ingredients.

[**0033**] Heated air is introduced into the drum members **35**, **35'** from a pressure source **52**, **52'** in order to dry the pieces of material **20** which are being coated with the coating solution **42**, **42'**. In accordance with the present invention, the coating material is dried on the individual pieces or cores of gum material **20** at the same time as the solution is applied to the pieces of material. This insures an even consistent coating and allows the build up of numerous thin layers or amounts of coating material on each core.

[0034] The air can be introduced into the drum members **35**, **35'** in a number of different manners, but preferably is introduced through perforations in the side walls of the inner drum members in order to allow a substantially uniform flow of heated air throughout the interior cavity of the drum member.

[0035] When a series of rotating drum mechanisms **34**, **34'**, etc. are utilized, small conveyor mechanisms **54** or conduits of conventional design are used to convey the pieces of material **20** being coated from one drum member to the other.

[0036] The spray nozzles **40** are fixed inside the drums and do not rotate with them. The spray nozzles **40** are positioned along one or more pipes or conduits **41** which extend along the inside of the rotating drum members **35**. The sugar or other materials being coated on the cores can be applied as a liquid or dry powder, although a wet coating is preferred. If a powder is utilized, it can be introduced into the rotating drum members from a central pipe, also preferably as a spray.

[0037] The drum members are preferably tilted or inclined with respect a horizontal plane a few degrees, such as 1-5°. It is also preferable to have an adjustable mechanism **60**, **62** which can change the tilt or angle of tilt of the drum members. A change in the angle of the drum members affects the speed by which the products are passed through them. Thus, it is possible to speed up or slow down the coating process as desired in order to change the thickness and/or quality of the coating.

[0038] The walls of the rotating drum members **35**, **35'** are preferably made from a screen or mesh so that heated air can easily pass through it. The spray nozzles **40** extend in series longitudinally within the drum member **35**. The nozzles **40** are mounted to a conduit or a support **41** which is positioned inside the drum member **34** and preferably along its central axis. Each of the nozzles **40** is operably connected to a conduit or line through which the coating solution flows for emission or ejection from the nozzle.

[0039] The system used for drying the material in drum members **35**, **35'** preferably includes a stationary shroud or frame **56** which extends around a portion of the inner drum member **35**. Air is introduced into the frame or shroud **56** through an inlet and connected to a source of air **52**. This source of air can be any conventional type, such as a blower (not shown) Also, the air is heated by a heating mechanism of conventional type (not shown) such that heated air is introduced into the drum member through its perforated or meshed side walls. Preferably the air is also dehumidified.

[0040] The air is also continuously exhausted from the drum members **35**, **35'** in order to continuously supply new heated air to the interior of the drum member and thus dry the coating solution on the pieces of material substantially instantaneously.

[0041] In operation, the small cores or pieces of material **20** are introduced into the inlet end **33** of the first drum member **35**. As the drum member rotates, pieces of material **20** flow by gravity longitudinally through the drum member for coating by the solution **42** sprayed from the nozzles **40**. If desired, doors or other access members can be provided at the outlet end **39** of the drum member in order to provide an enclosed cylinder for the coating and drying process.

[0042] The drum members are rotated at approximately 15-35 rpm, depending on the desired flow rate of the material and coating solution. As the drum members rotate, the flanges, ridges or flightings inside the drum carry the pieces of material around the perimeter of the drum member and allow it to fall or tumble around inside the drum member. In this manner, a curtain or "wave" of material spaced apart from the side walls of the drum member is produced.

[0043] The nozzles **40** can be directed toward the curtain or wave of material which is formed inside drum member **35** in order to effectively coat each of the cores of material. The heated air from the air supply **52** is drawn through the material and exhausted. The heated air dries the coating solution **42** on the pieces of material **20**. Preferably, the temperature of the heated air is approximately 150-250° F., and preferably within the range of 200-220° F., in order to maintain the pieces of material at a temperature of approximately 120° F. The heated air can also be directed toward the curtain or wave of material which is formed inside the rotating drum. In this manner, the coating can be dried virtually at the same time that it is applied to the cores.

[0044] As the pieces of material **20** progress along the length of the drum members **35**, **35'**, the pieces of material are coated with successive layers or amounts of coating solution in order to build up an exterior shell.

[0045] Preferably, a computer micro-processor is utilized for controlling the operation of the continuous coating system or apparatus **30**. For example, the computer can be utilized to control electrical power to the apparatus, the tilting angle of the drum members, the rotational speed of the drum members, the spraying functions of the nozzles, and the air flow and temperature in the drying system.

[0046] Preferably, the drum members **35**, **35'** are 10-12 feet in length although they could be, in accordance with the invention, larger or shorter in length. Also, in order to coat the materials with an acceptable coating for chewing gum and bubble gum products, preferably a series of drum members are provided. The drum members can be positioned in a continuous line, as shown in **FIG. 4**, or they can be provided in a stacked arrangement vertically positioned one above the other, which would utilize less floor space in the manufacturing facility.

[0047] In order to provide an even coating of material, it is desired to have each of the individual cores or pieces of material **20** proceed through the rotating drum member in substantially the same time. This means that the first pieces of material introduced into the inlet of the first drum member are also the first pieces of material which exit from, or are removed from, the drum member at its outlet end. In order to accomplish this, the angle of tilt of the rotating drum can be increased. This prevents individual pieces or groups of material from being tumbled in place, which would result in differing amount of coating solution being applied to different pieces of material in the drum member.

[0048] It is also desired to initially prevent the pieces of gum material from sticking or accumulating together in the initial drum member in a continuous coating system. Gum material, when heated or raised to an elevated temperature, becomes sticky or tacky and individual pieces of material can adhere together, which is undesirable. Therefore, the

pieces of material are introduced into the first rotating drum member at a relatively low temperature. Also, the air being supplied to the initial drum member in a series of drum members can be at a lower temperature than the air temperature in subsequent drum members in order to prevent the pieces of material from sticking together until they secure one or more layers of coating solution on them. Once the pieces of material have an initial coating on them and are tumbled inside the rotating drums, the temperature of the air can be increased. Also, in order to reduce tackiness, the air introduced in the system should be dehumidified.

[0049] A continuous coating process for coating individual cores or pieces of gum material substantially reduces the cost and time for producing coated gum products. For example, a batch-type process for coating material which could take up to 6-7 hours, can be completed in 1-3 hours with the present invention. In this regard, as opposed to the prior art processes which add the coatings (spray), tumble the cores and then dry them in essentially three distinct steps, the present invention accomplishes all three of these steps at substantially the same time. Except for a brief stoppage of the spraying for nozzle cleaning (about 5 seconds per minute), the spraying, tumbling and drying procedures take place simultaneously.

[0050] Moreover, less floor space in the facility is needed in order to produce the coated products by a continuous coating process. For example, a system utilizing six rotating drum members in series could be controlled by a single person with a computer controlled process. In contrast, it would be necessary to utilize a number of batteries of up to ten mixers each and a crew of six people or more in order to produce the same quantity of coated gum material.

[0051] The capital cost for acquiring, setting up, and operating the continuous coating system are also substantially less than the cost for providing an operating batch-type process to secure similar results.

[0052] In order to provide the optimum finish for a coated product, it is desirable to insure that the first few layers of coating solution are as smooth as possible. The smoother and more uniform the initial coatings are, the smoother and more uniform the subsequent coatings and the final product will be.

[0053] In order to insure that the initial coatings are uniform and consistent, it is also possible to utilize the alternative coating process **80** as shown in **FIG. 5**. In that process or system **80**, one or more prior art mixers **12** are utilized initially in order to break apart and provide initial coatings on the individual cores or small pieces of material.

[0054] Once one or more initial layers or amounts of coating material are provided on the pieces of material, the materials are conveyed or transported to a rotating drum member. Thereafter, all the subsequent coatings on the cores or material are provided by the continuous coating apparatus and system.

[0055] Another manner in which to improve the coating of chewing gum and bubble gum products, is to change the formula of the sugar syrup or coating solution utilized in the continuous process. The formula of the coating can be changed also from drum member to drum member in a continuous process or from an initial batch-type mixer and then to the rotating drum members. For example, a representative formula for the syrup coating is as follows:

[0056] Sugar 66%

[0057] Water 31%

[0058] Starch 1%

[0059] Gum Arabic 1%

[0060] Titanium Dioxide 1%

[0061] It is also possible to vary these percentages. For example, the sugar can be varied between 50-80% with the water content being adjusted accordingly. The other ingredients preferably are not varied more than 1-2%.

[0062] Also, more Gum Arabic could be added to the syrup to increase its percentage more than 1 percent at initial stages of the coating process. Thereafter, the Gum Arabic percentage could be dropped to 0.25 percent or less in subsequent stages of the coating process.

[0063] The rotating drum members which can be utilized with the present invention can be any conventional type of rotating mesh-type drum member, such as the continuous systems currently being provided by Coating Machinery Systems, Inc. in Ames, Iowa.

[0064] As indicated earlier, the coating material also could be a dry powder, as well as a liquid solution. Further, the coating material could be a sugarless coating as well as a sugar coating. Coatings of these types are conventional today and are known to persons of ordinary skill in the art.

[0065] With the present invention, the pieces of material are coated more uniformly and in significantly less time than is achieved in batch-type coating processing. The floor space in the facility is also reduced substantially, by 20 percent or more, compared to batch-type coating processes. The decrease in time can be 30 percent or more.

[0066] While particular embodiments of the invention have been shown and described, numerous variations and alternate embodiments will occur to those skilled in the art. Accordingly, it is intended that the invention be limited only in terms of the appended claims.

What is claimed is:

1. A system for continuously coating cores of gum material comprising:

at least one elongated rotating drum member having a first end and a second end, said drum member being tilted at an angle relative to horizontal;

the cores of gum material being introduced into said drum member at said first end and being removed from said drum member at said second end,

a plurality of nozzles positioned in said drum member for applying coating materials on the cores of gum material in said drum as said cores of gum material proceed through said drum member from said first end to said second end; and

a supply of heated air, said air being introduced into said drum in order to dry the coating materials as they are applied to the cores of gum material;

wherein said cores of material are processed in said drum member on a first in-first out basis.

2. The system as recited in claim 1 wherein at least two drum members are provided in series, and wherein said system further comprises a conveyer mechanism for transporting said cores of gum material from a first drum member to a second drum member.

3. The system as recited in claim 1 further comprising a batch-type mixer mechanism for providing an initial coating of material on said cores of gum material before they are introduced into said drum member.

4. The system as recited in claim 1 wherein said coating materials are in a liquid form and are applied to said cores of gum material by spraying.

5. The system as recited in claim 1 wherein said coating materials are in a dry powder form.

6. A method for continuously coating cores of gum material comprising:

(a) continuously introducing cores of gum material into an inlet end of a rotating drum member;

(b) transporting the cores of gum material from said inlet end to an outlet end of said drum member;

(c) applying a coating material on said cores of gum material inside said drum member;

(d) drying said coating cores of gum material by circulation of heated air inside said drum member; and

(e) inclining said drum member relative to the horizontal in order to insure that the first cores of gum material introduced into said inlet end of said rotating drum member are substantially the first cores of gum material to be exhausted from said outlet end of said drum member.

7. The method as recited in claim 6 further comprising the step of applying at least one initial coating of material on the cores of gum material prior to step (a).

8. The method as recited in claim 6 wherein at least two drum members are provided and said method further comprises the step of transporting the cores of gum material from a first drum member to a second drum member.

9. The method as recited in claim 8 further comprising the step of changing the formula of said coating material from the coating material used to form said at least one initial coating of material to the coating material used to introduce into said drum member.

10. The method as recited in claim 8 further comprising the step of providing a first formula of coating material used to introduce into said first drum member and a second and different formula of coating material used to spray into said second drum member.

11. A method as recited in claim 8 further comprising the step of providing drying air into said first drum member at a lower temperature than the drying air introduced into said second drum member.

12. A method as recited in claim 6 wherein said coating materials are applied by spraying in a liquid form.

* * * * *