(12) INTERNATIONAL APPLICATION PUBLISHED UNDER THE PATENT COOPERATION TREATY (PCT)

(19) World Intellectual Property Organization
International Bureau

(43) International Publication Date
7 April 2005 (07.04.2005)

PCT

(10) International Publication Number
WO 2005/030031 A2

(51) International Patent Classification[7]: A61B

(21) International Application Number:
PCT/US2004/030732

(22) International Filing Date:
17 September 2004 (17.09.2004)

(25) Filing Language: English

(26) Publication Language: English

(30) Priority Data:
2003-0066108 24 September 2003 (24.09.2003) KR
10/728,566 5 December 2003 (05.12.2003) US

(71) Applicant *(for all designated States except US)*: **N SPINE, INC.** [US/US]; 4744 Keswick Court, San Diego, CA 92130 (US).

(72) Inventor; and
(75) Inventor/Applicant *(for US only)*: **JAHNG, Tae-Ahn** [KR/KR]; 255 Youngdeung-dung, Line Apt. #101-1307, IkSan, Chonbuk 560-160 (KR).

(74) Agents: **KIM, Richard, C.** et al.; Morrison & Foerster LLP, Suite 500, 3811 Valley Centre Drive, San Diego, CA 92130-2332 (US).

(81) Designated States *(unless otherwise indicated, for every kind of national protection available)*: AE, AG, AL, AM, AT, AU, AZ, BA, BB, BG, BR, BW, BY, BZ, CA, CH, CN, CO, CR, CU, CZ, DE, DK, DM, DZ, EC, EE, EG, ES, FI, GB, GD, GE, GH, GM, HR, HU, ID, IL, IN, IS, JP, KE, KG, KP, KR, KZ, LC, LK, LR, LS, LT, LU, LV, MA, MD, MG, MK, MN, MW, MX, MZ, NA, NI, NO, NZ, OM, PG, PH, PL, PT, RO, RU, SC, SD, SE, SG, SK, SL, SY, TJ, TM, TN, TR, TT, TZ, UA, UG, US, UZ, VC, VN, YU, ZA, ZM, ZW.

(84) Designated States *(unless otherwise indicated, for every kind of regional protection available)*: ARIPO (BW, GH, GM, KE, LS, MW, MZ, NA, SD, SL, SZ, TZ, UG, ZM, ZW), Eurasian (AM, AZ, BY, KG, KZ, MD, RU, TJ, TM), European (AT, BE, BG, CH, CY, CZ, DE, DK, EE, ES, FI, FR, GB, GR, HU, IE, IT, LU, MC, NL, PL, PT, RO, SE, SI, SK, TR), OAPI (BF, BJ, CF, CG, CI, CM, GA, GN, GQ, GW, ML, MR, NE, SN, TD, TG).

Published:
— *without international search report and to be republished upon receipt of that report*

For two-letter codes and other abbreviations, refer to the "Guidance Notes on Codes and Abbreviations" appearing at the beginning of each regular issue of the PCT Gazette.

(54) Title: A METHOD AND APPARATUS FOR FLEXIBLE FIXATION OF A SPINE

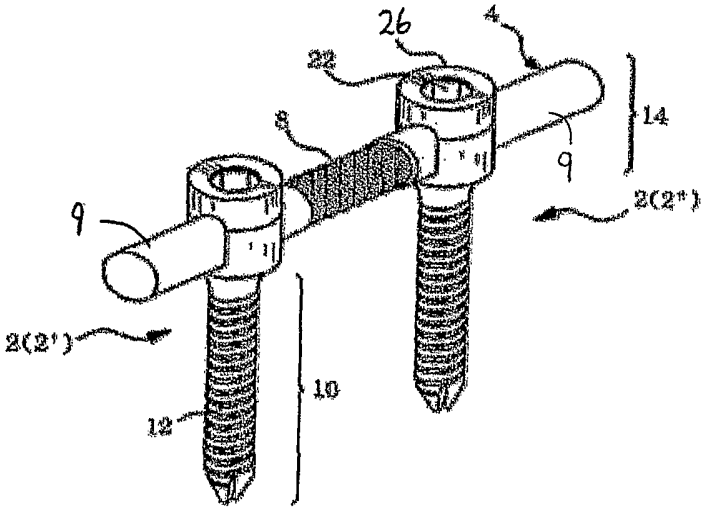

(57) Abstract: A flexible spinal fixation device having a flexible metallic connection unit for non-rigid stabilization of the spinal column. In one embodiment, the fixation device includes at least two securing members configured to be inserted into respective adjacent spinal pedicles, each securing member each including a coupling assembly. The fixation device further includes a flexible metal connection unit configured to be received and secured within the coupling assemblies of each securing member so as to flexibly stabilize the affected area of the spine.

WO 2005/030031 A2

A METHOD AND APPARATUS FOR FLEXIBLE FIXATION OF A SPINE

CROSS-REFERENCE TO RELATED APPLICATIONS

The present application claims the benefit of priority under 35 U.S.C. § 119(a) to Korean Application Serial No. 2003-0066108, entitled "Dynamic Spinal Fixation Device," filed on September 24, 2003, the entirety of which is incorporated by reference.

BACKGROUND OF THE INVENTION

Field of the Invention

The present invention relates to a method and system for fixing and stabilizing a spinal column and, more particularly, to a method and system of spinal fixation in which one or more screw type fixing members are implanted and fixed into a portion of a patient's spinal column and flexible, semi-rigid rods or plates are connected and fixed to the upper ends of the fixing members to provide dynamic stabilization of the spinal column.

Description of the Related Art

Degenerative spinal column diseases, such as disc degenerative diseases (DDD), spinal stenosis, spondylolisthesis, and so on, need surgical operation if they do not take a turn for the better by conservative management. Typically, spinal decompression is the first surgical procedure that is performed. The primary purpose of decompression is to reduce pressure in the spinal canal and on nerve roots located therein by removing a certain tissue of the spinal column to reduce or eliminate the pressure and pain caused by the pressure. If the tissue of the spinal column is removed the pain is reduced but the spinal column is weakened. Therefore, fusion surgery (e.g., ALIF, PLIF or posterolateral fusion) is often necessary for spinal stability following the decompression procedure. However, following the surgical procedure, fusion takes additional time to achieve maximum stability and a spinal fixation device is typically used to support the spinal column until a desired level of fusion is achieved. Depending on a patient's particular

circumstances and condition, a spinal fixation surgery can sometimes be performed immediately following decompression, without performing the fusion procedure. The fixation surgery is performed in most cases because it provides immediate postoperative stability and, if fusion surgery has also been performed, it provides support of the spine until sufficient fusion and stability has been achieved.

Conventional methods of spinal fixation utilize a rigid spinal fixation device to support an injured spinal part and prevent movement of the injured part. These conventional spinal fixation devices include: fixing screws configured to be inserted into the spinal pedicle or sacral of the backbone to a predetermined depth and angle, rods or plates configured to be positioned adjacent to the injured spinal part, and coupling elements for connecting and coupling the rods or plates to the fixing screws such that the injured spinal part is supported and held in a relatively fixed position by the rods or plates.

U.S. Patent No. 6,193,720 discloses a conventional spinal fixation device, in which connection members of a rod or plate type are mounted on the upper ends of at least one or more screws inserted into the spinal pedicle or sacral of the backbone. The connection units, such as the rods and plates, are used to stabilize the injured part of the spinal column which has been weakened by decompression. The connection units also prevent further pain and injury to the patient by substantially restraining the movement of the spinal column. However, because the connection units prevent normal movement of the spinal column, after prolonged use, the spinal fixation device can cause ill effects, such as "junctional syndrome" (transitional syndrome) or "fusion disease" resulting in further complications and abnormalities associated with the spinal column. In particular, due to the high rigidity of the rods or plates used in conventional fixation devices, the patient's fixed joints are not allowed to move after the surgical operation, and the movement of the spinal joints located above or under the operated area is increased. Consequently, such spinal fixation devices cause decreased mobility of the patient and increased stress and instability to the spinal column joints adjacent to the operated area.

It has been reported that excessive rigid spinal fixation is not helpful to the fusion process due to load shielding caused by rigid fixation. Thus, trials using load sharing semi-rigid spinal fixation devices have been performed to eliminate this problem and assist the bone fusion process. For example, U.S. Patent No. 5,672,175, U.S. Patent No. 5,540,688, and U.S. Pub No 2001/0037111 disclose dynamic spine stabilization devices having flexible designs that permit axial load translation (i.e., along the vertical axis of the spine) for bone fusion promotion. However, because these devices are intended for use following a bone fusion procedure, they are not well-suited for spinal fixation without fusion. Thus, in the end result, these devices do not prevent the problem of rigid fixation resulting from fusion.

To solve the above-described problems associated with rigid fixation, non-fusion technologies have been developed. The Graf band is one example of a non-fusion fixation device that is applied after decompression without bone fusion. The Graf band is composed of a polyethylene band and pedicle screws to couple the polyethylene band to the spinal vertebrae requiring stabilization. The primary purpose of the Graf band is to prevent sagittal rotation (flexion instability) of the injured spinal parts. Thus, it is effective in selected cases but is not appropriate for cases that require greater stability and fixation. See, Kanayama et al, Journal of Neurosurgery 95(1 Suppl):5-10, 2001, Markwalder & Wenger, Acta Neurochrgica 145(3):209-14.). Another non-fusion fixation device called "Dynesys" has recently been introduced. See Stoll et al, European Spine Journal 11 Suppl 2:S170-8, 2002, Schmoelz et al, J of spinal disorder & techniques 16(4):418-23, 2003. The Dynesys device is similar to the Graf band except it uses a polycarburethane spacer between the screws to maintain the distance between the heads of two corresponding pedicle screws and, hence, adjacent vertebrae in which the screws are fixed. Early reports by the inventors of the Dynesys device indicate it has been successful in many cases. However, it has not yet been determined whether the Dynesys device can maintain long-term stability with flexibility and durability in a controlled study.

Because it has polyethylene components and interfaces, there is a risk of mechanical failure. Furthermore, due to the mechanical configuration of the device, the surgical technique required to attach the device to the spinal column is complex and complicated.

U.S. patent nos. 5,282,863 and 4,748,260 disclose a flexible spinal stabilization system and method using a plastic, non-metallic rod. U.S. patent publication no. 2003/0083657 discloses another example of a flexible spinal stabilization device that uses a flexible elongate member. These devices are flexible but they are not well-suited for enduring long-term axial loading and stress. Additionally, the degree of desired flexibility vs. rigidity may vary from patient to patient. The design of existing flexible fixation devices are not well suited to provide varying levels of flexibility to provide optimum results for each individual candidate. For example, U.S. patent no. 5,672,175 discloses a flexible spinal fixation device which utilizes a flexible rod made of metal alloy and/or a composite material. Additionally, compression or extension springs are coiled around the rod for the purpose of providing de-rotation forces on the vertebrae in a desired direction. However, this patent is primarily concerned with providing a spinal fixation device that permits "relative longitudinal translational sliding movement along [the] vertical axis" of the spine and neither teaches nor suggests any particular designs of connection units (e.g., rods or plates) that can provide various flexibility characteristics. Prior flexible rods such as that mentioned in U.S. 5,672,175 typically have solid construction with a relatively small diameter in order to provide a desired level of flexibility. Because they are typically very thin to provide suitable flexibility, such prior art rods are prone to mechanical failure and have been known to break after implantation in patients.

Therefore, conventional spinal fixation devices have not provided a comprehensive and balanced solution to the problems associated with curing spinal diseases. Many of the prior devices are characterized by excessive rigidity, which leads to the problems discussed above while others, though providing some flexibility, are not

well-adapted to provide varying degrees of flexibility. Additionally, existing flexible fixation devices utilize non-metallic components that are not proven to provide long-term stability and durability. Therefore, there is a need for an improved dynamic spinal fixation device that provides a desired level of flexibility to the injured parts of the spinal column, while also providing long-term durability and consistent stabilization of the spinal column.

Additionally, in a conventional surgical method for fixing the spinal fixation device to the spinal column, a doctor incises the midline of the back to about 10-15 centimeters, and then, dissects and retracts it to both sides. In this way, the doctor performs muscular dissection to expose the outer part of the facet joint. Next, after the dissection, the doctor finds an entrance point to the spinal pedicle using radiographic devices (e.g., C-arm flouroscopy), and inserts securing members of the spinal fixation device (referred to as "spinal pedicle screws") into the spinal pedicle. Thereafter, the connection units (e.g., rods or plates) are attached to the upper portions of the pedicle screws in order to provide support and stability to the injured portion of the spinal column. Thus, in conventional spinal fixation procedures, the patient's back is incised about 10 ~ 15cm, and as a result, the back muscle, which is important for maintaining the spinal column, is incised or injured, resulting in significant post-operative pain to the patient and a slow recovery period.

Recently, to reduce patient trauma, a minimally invasive surgical procedure has been developed which is capable of performing spinal fixation surgery through a relatively small hole or "window" that is created in the patient's back at the location of the surgical procedure. Through the use of an endoscope, or microscope, minimally invasive surgery allows a much smaller incision of the patient's affected area. Through this smaller incision, two or more securing members (e.g., pedicle screws) of the spinal fixation device are screwed into respective spinal pedicle areas using a navigation system. Thereafter, special tools are used to connect the stabilizing members (e.g., rods or plates)

of the fixation device to the securing members. Alternatively, or additionally, the surgical procedure may include inserting a step dilator into the incision and then gradually increasing the diameter of the dilator. Thereafter, a tubular retractor is inserted into the dilated area to retract the patient's muscle and provide a visual field for surgery. After establishing this visual field, decompression and, if desired, fusion procedures may be performed, followed by a fixation procedure, which includes the steps of finding the position of the spinal pedicle, inserting pedicle screws into the spinal pedicle, using an endoscope or a microscope, and securing the stabilization members (e.g., rods or plates) to the pedicle screws in order to stabilize and support the weakened spinal column.

One of the most challenging aspects of performing the minimally invasive spinal fixation procedure is locating the entry point for the pedicle screw under endoscopic or microscopic visualization. Usually anatomical landmarks and/or radiographic devices are used to find the entry point, but clear anatomical relationships are often difficult to identify due to the confined working space. Additionally, the minimally invasive procedure requires that a significant amount of the soft tissue must be removed to reveal the anatomy of the regions for pedicle screw insertion. The removal of this soft tissue results in bleeding in the affected area, thereby adding to the difficulty of finding the correct position to insert the securing members and causing damage to the muscles and soft tissue surrounding the surgical area. Furthermore, because it is difficult to accurately locate the point of insertion for the securing members, conventional procedures are unnecessarily traumatic.

Radiography techniques have been proposed and implemented in an attempt to more accurately and quickly find the position of the spinal pedicle in which the securing members will be inserted. However, it is often difficult to obtain clear images required for finding the corresponding position of the spinal pedicle using radiography techniques due to radiographic interference caused by metallic tools and equipment used during the surgical operation. Moreover, reading and interpreting radiographic images is a complex

task requiring significant training and expertise. Radiography poses a further problem in that the patient is exposed to significant amounts of radiation.

Although some guidance systems have been developed which guide the insertion of a pedicle screw to the desired entry point on the spinal pedicle, these prior systems have proven difficult to use and, furthermore, hinder the operation procedure. For example, prior guidance systems for pedicle screw insertion utilize a long wire that is inserted through a guide tube that is inserted through a patient's back muscle and tissue. The location of insertion of the guide tube is determined by radiographic means (e.g., C-arm flouroscope) and driven until a first end of the guide tube reaches the desired location on the surface of the pedicle bone. Thereafter, a first end of the guide wire, typically made of a biocompatible metal material, is inserted into the guide tube and pushed into the pedicle bone, while the opposite end of the wire remains protruding out of the patient's back. After the guide wire has been fixed into the pedicle bone, the guide tube is removed, and a hole centered around the guide wire is dilated and retracted. Finally, a pedicle screw having an axial hole or channel configured to receive the guide wire therethrough is guided by the guide wire to the desired location on the pedicle bone, where the pedicle screw is screw-driven into the pedicle.

Although the concept of the wire guidance system is a good one, in practice, the guide wire has been very difficult to use. Because it is a relatively long and thin wire, the structural integrity of the guide wire often fails during attempts to drive one end of the wire into the pedicle bone, making the process unnecessarily time-consuming and laborious. Furthermore, because the wire bends and crimps during insertion, it does not provide a smooth and secure anchor for guiding subsequent tooling and pedicle screws to the entry point on the pedicle. Furthermore, current percutaneous wire guiding systems are used in conjunction with C-arm flouroscopy (or other radiographic device) without direct visualization with the use of an endoscope or microscope. Thus, current wire guidance systems pose a potential risk of misplacement or pedicle breakage. Finally,

because one end of the wire remains protruding out of the head of the pedicle screw, and the patient's back, this wire hinders freedom of motion by the surgeon in performing the various subsequent procedures involved in spinal fixation surgery. Thus, there is a need to provide an improved guidance system, adaptable for use in minimally invasive pedicle screw fixation procedures under endoscopic or microscopic visualization, which is easier to implant into the spinal pedicle and will not hinder subsequent procedures performed by the surgeon.

As discussed above, existing methods and devices used to cure spinal diseases are in need of much improvement. Most conventional spinal fixation devices are too rigid and inflexible. This excessive rigidity causes further abnormalities and diseases of the spine, as well as significant discomfort to the patient. Although some existing spinal fixation devices do provide some level of flexibility, these devices are not designed or manufactured so that varying levels of flexibility may be easily obtained to provide a desired level of flexibility for each particular patient. Additionally, prior art devices having flexible connection units (e.g., rods or plates) pose a greater risk of mechanical failure and do not provide long-term durability and stabilization of the spine. Furthermore, existing methods of performing the spinal fixation procedure are unnecessarily traumatic to the patient due to the difficulty in finding the precise location of the spinal pedicle or sacral of the backbone where the spinal fixation device will be secured.

BRIEF SUMMARY OF THE INVENTION

The invention addresses the above and other needs by providing an improved method and system for stabilizing an injured or weakened spinal column.

To overcome the deficiencies of conventional spinal fixation devices, in one embodiment, the inventor of the present invention has invented a novel flexible spinal fixation device with an improved construction and design that uses metal or metal-synthetic hybrid components to provide a desired level of flexibility, stability and

durability.

As a result of long-term studies to reduce the operation time required for minimally invasive spinal surgery, to minimize injury to tissues near the surgical area, in another embodiment, the invention provides a method and device for accurately and quickly finding a position of the spinal column in which securing members of the spinal fixation device will be inserted. A novel guidance/marking device is used to indicate the position in the spinal column where the securing members will be inserted.

BRIEF DESCRIPTION OF THE DRAWINGS

Figure 1 illustrates a perspective view of a spinal fixation device in accordance with one embodiment of the invention.

Figure 2 illustrates a perspective view of spinal fixation device in accordance with another embodiment of the invention.

Figure 3 illustrates an exploded view of the coupling assembly 14 of the pedicle screw 2 of Figures 1 and 2, in accordance with one embodiment of the invention.

Figure 4 illustrates a perspective view of a flexible rod connection unit in accordance with one embodiment of the invention.

Figure 5 illustrates a perspective view of a flexible rod connection unit in accordance with another embodiment of the invention.

Figure 6 illustrates a perspective view of a flexible rod connection unit in accordance with a further embodiment of the invention.

Figure 7 illustrates a perspective view of a pre-bent flexible rod connection unit in accordance with one embodiment of the invention.

Figure 8 illustrates a perspective, cross-sectional view of a flexible portion of connection unit in accordance with one embodiment of the invention.

Figure 9 illustrates a perspective, cross-sectional view of a flexible portion of connection unit in accordance with another embodiment of the invention.

Figure 10 illustrates a perspective, cross-sectional view of a flexible portion of

connection unit in accordance with a further embodiment of the invention.

Figure 11 illustrates a perspective view of a flexible rod connection unit in accordance with one embodiment of the invention.

Figure 12A illustrates a perspective view of a flexible connection unit having one or more spacers in between two end portions, in accordance with one embodiment of the invention.

Figure 12B illustrates an exploded view of the flexible connection unit of Figure 12A.

Figure 12C provides a view of the male and female interlocking elements of the flexible connection unit of Figures 12A and 12B, in accordance with one embodiment of the invention.

Figure 13 shows a perspective view of a flexible connection unit, in accordance with a further embodiment of the invention.

Figure 14 illustrates a perspective view of a spinal fixation device in accordance with another embodiment of the invention.

Figure 15 illustrates an exploded view of the spinal fixation device of Figure 14.

Figure 16A shows a perspective view of a flexible plate connection unit in accordance with one embodiment of the invention.

Figure 16B illustrates a perspective view of a flexible plate connection unit in accordance with a further embodiment of the invention.

Figure 16C shows a side view of the flexible plate connection unit of Figure 16A.

Figure 16D shows a top view of the flexible plate connection unit of Figure 16A.

Figure 16E illustrates a side view of the flexible plate connection unit of Figure 16A having a pre-bent configuration in accordance with a further embodiment of the invention.

Figure 17 is a perspective view of a flexible plate connection unit in accordance with another embodiment of the invention.

Figure 18 illustrates a perspective view of a flexible plate connection unit in accordance with another embodiment of the invention.

Figure 19 illustrates a perspective view of a hybrid rod-plate connection unit having a flexible middle portion according to a further embodiment of the present invention.

Figure 20 is a perspective view of a spinal fixation device that utilizes the hybrid rod-plate connection unit of Figure 19.

Figure 21 illustrates a perspective view of the spinal fixation device of Figure 1 after it has been implanted into a patient's spinal column.

Figures 22A and 22B provide perspective views of spinal fixation devices utilizing the plate connection units of Figures 16A and 16B, respectively.

Figure 23A illustrates a perspective view of two pedicle screws inserted into the pedicles of two adjacent vertebrae at a skewed angle, in accordance with one embodiment of the invention.

Figure 23B illustrates a structural view of a coupling assembly of a pedicle screw in accordance with one embodiment of the invention.

Figure 23C provides a perspective view of a slanted stabilizing spacer in accordance with one embodiment of the invention.

Figure 23D illustrates a side view of the slanted stabilizing spacer of Figure 23C.

Figure 23E is a top view of the cylindrical head of the pedicle screw of Figure 23.

Figure 24 illustrates a perspective view of a marking and guiding device in accordance with one embodiment of the invention.

Figure 25 is an exploded view of the marking and guidance device of Figure 24.

Figure 26A provides a perspective, cross-section view of a patient's spine after the marking and guiding device of Figure 24 has been inserted during surgery.

Figure 26B provides a perspective, cross-section view of a patient's spine as an inner trocar of the marking and guiding device of Figure 24 is being removed.

Figures 27A and 27B illustrate perspective views of two embodiments of a fiducial pin, respectively.

Figure 28 is a perspective view of a pushing trocar in accordance with a further embodiment of the invention.

Figure 29A illustrates a perspective, cross-sectional view of a patient's spine as the pushing trocar of Figure 28 is used to drive a fiducial pin into a designate location of a spinal pedicle, in accordance with one embodiment of the invention.

Figure 29B illustrates a perspective, cross-sectional view of a patient's spine after two fiducial pins have been implanted into two adjacent spinal pedicles, in accordance with one embodiment of the invention.

Figure 30 is a perspective view of a cannulated awl in accordance with one embodiment of the invention.

Figure 31 is a perspective, cross-sectional view of a patient's spine as the cannulated awl of Figure 30 is being used to enlarge an entry hole for a pedicle screw, in accordance with one embodiment of the invention.

Figure 32 provides a perspective view of fiducial pin retrieving device, in accordance with one embodiment of the invention.

Figure 33 is a perspective view of a pedicle screw having an axial cylindrical cavity for receiving at least a portion of a fiducial pin therein, in accordance with a further embodiment of the invention.

Figure 34 is a perspective, cross-sectional view of a patient's spine after one pedicle screw has been implanted into a designated location of a spinal pedicle, in accordance with one embodiment of the invention.

Figure 35 is a perspective, cross-sectional view of a patient's spine after two pedicle screws have been implanted into designated locations of two adjacent spinal pedicles, in accordance with one embodiment of the invention.

DETAILED DESCRIPTION OF THE PREFERRED EMBODIMENTS

The invention is described in detail below with reference to the figures wherein like elements are referenced with like numerals throughout.

Figure 1 depicts a spinal fixation device in accordance with one embodiment of the present invention. The spinal fixation device includes two securing members 2 (designated as 2' and 2"), and a flexible fixation rod 4 configured to be received and secured within a coupling assembly 14, as described in further detail below with respect to Figure 3. . Each securing member 2 includes a threaded screw-type shaft 10 configured to be inserted and screwed into a patient's spinal pedicle. As shown in Figure 1, the screw-type shaft 10 includes an external spiral screw thread 12 formed over the length of the shaft 10 and a conical tip at the end of the shaft 10 configured to be inserted into the patient's spinal column at a designated location. Other known forms of the securing member 2 may be used in connection with the present invention provided the securing member 2 can be inserted and fixed into the spinal column and securely coupled to the rod 4.

As described above, the spinal fixation device is used for surgical treatment of spinal diseases by mounting securing members 2 at desired positions in the spinal column. In one embodiment, the rod 4 extends across two or more vertebrae of the spinal column and is secured by the securing members 2 so as to stabilize movement of the two or more vertebrae.

Figure 2 illustrates a perspective view of a spinal fixation device in accordance with a further embodiment of the present invention. The spinal fixation device of Figure 2 is similar to the spinal fixation device of Figure 1 except that the rod 4 comprises a flexible middle portion 8 juxtaposed between two rigid end portions 9 of the rod 4.

Figure 3 provides an exploded view of the securing member 2 of Figures 1 and 2 illustrating various components of the coupling assembly 14, in accordance with one embodiment of the invention. As shown in Figure 3, the coupling assembly 14 includes: a cylindrical head 16 located at a top end of the screw-type shaft 10, a spiral thread or

groove 18 formed along portions of the inner wall surface of the cylindrical head 16, and a U-shaped seating groove 20 configured to receive the rod 4 therein. The coupling assembly 14 further comprises an outside-threaded nut 22 having a spiral thread 24 formed on the outside lateral surface of the nut 22, wherein the spiral thread 24 is configured to mate with the internal spiral thread 18 of the cylindrical head 16. In a further embodiment, the coupling assembly 14 includes a fixing cap 26 configured to be mounted over a portion of the cylindrical head 16 to cover and protect the outside-threaded nut 22 and more securely hold rod 4 within seating groove 20. In one embodiment an inner diameter of the fixing gap 26 is configured to securely mate with the outer diameter of the cylindrical head 16. Other methods of securing the fixing cap 26 to the cylindrical head, such as correspondingly located notches and groove (not shown), would be readily apparent to those of skill in the art. In preferred embodiments the components and parts of the securing member 2 may be made of highly rigid and durable bio-compatible materials such as: stainless steel, iron steel, titanium or titanium alloy. As known in the art, and used herein, "bio-compatible" materials refers to those materials that will not cause any adverse chemical or immunological reactions after being implanted into a patient's body.

As shown in Figures 1 and 2, in preferred embodiments, the rod 4 is coupled to the securing means 2 by seating the rod 4 horizontally into the seating groove 20 of the coupling means 14 perpendicularly to the direction of the length of the threaded shaft 10 of securing member 2. The outside threaded nut 22 is then received and screwed into the cylindrical head 16 above the rod 4 so as to secure the rod 4 in the seating groove 20. The fixing cap 26 is then placed over the cylindrical head 16 to cover, protect and more firmly secure the components in the internal cavity of the cylindrical head 16. Figures 4-7 illustrate perspective views of various embodiments of a rod 4 that may be used in a fixation device, in accordance with the present invention. Figure 4 illustrates the rod 4 of Figure 1 wherein the entire rod is made and designed to be flexible. In this

embodiment, rod 4 comprises a metal tube or pipe having a cylindrical wall 5 of a predefined thickness. In one embodiment, in order to provide flexibility to the rod 4, the cylindrical wall 5 is cut in a spiral fashion along the length of the rod 4 to form spiral cuts or grooves 6. As would be apparent to one of ordinary skill in the art, the width and density of the spiral grooves 6 may be adjusted to provide a desired level of flexibility. In one embodiment, the grooves 6 are formed from very thin spiral cuts or incisions that penetrate through the entire thickness of the cylindrical wall of the rod 4. As known to those skilled in the art, the thickness and material of the tubular walls 5 also affect the level of flexibility.

In one embodiment, the rod 4 is designed to have a flexibility that substantially equals that of a normal back. Flexibility ranges for a normal back are known by those skilled in the art, and one of ordinary skill can easily determine a thickness and material of the tubular walls 5 and a width and density of the grooves 6 to achieve a desired flexibility or flexibility range within the range for a normal back. When referring to the grooves 6 herein, the term "density" refers to tightness of the spiral grooves 6 or, in other words, the distance between adjacent groove lines 6 as shown in Figure 4, for example. However, it is understood that the present invention is not limited to a particular, predefined flexibility range. In one embodiment, in addition to having desired lateral flexibility characteristics, the rigidity of the rod 4 should be able to endure a vertical axial load applied to the patient's spinal column along a vertical axis of the spine in a uniform manner with respect to the rest of the patient's natural spine.

Figure 5 illustrates the rod 4 of Figure 2 wherein only a middle portion 8 is made and designed to be flexible and two end portions 9 are made to be rigid. In one embodiment, metal end rings or caps 9', having no grooves therein, may be placed over respective ends of the rod 4 of Figure 4 so as make the end portions 9 rigid. The rings or caps 9' may be permanently affixed to the ends of the rod 4 using known methods such as pressing and/or welding the metals together. In another embodiment, the spiral groove 6

is only cut along the length of the middle portion 8 and the end portions 9 comprise the tubular wall 5 without grooves 6. Without the grooves 6, the tubular wall 5, which is made of a rigid metal or metal hybrid material, exhibits high rigidity.

Figure 6 illustrates a further embodiment of the rod 4 having multiple sections, two flexible sections 8 interleaved between three rigid sections 9. This embodiment may be used, for example, to stabilize three adjacent vertebrae with respect to each other, wherein three pedicle screws are fixed to a respective one of the vertebrae and the three rigid sections 9 are connected to a coupling assembly 14 of a respective pedicle screw 2, as described above with respect to Figure 3. Each of the flexible sections 8 and rigid sections 9 may be made as described above with respect to Figure 5.

Figure 7 illustrates another embodiment of the rod 4 having a pre-bent structure and configuration to conform to and maintain a patient's curvature of the spine, known as "lordosis," while stabilizing the spinal column. Generally, a patient's lumbar is in the shape of a 'C' form, and the structure of the rod 4 is formed to coincide to the normal lumbar shape when utilized in the spinal fixation device of Figure 2, in accordance with one embodiment of the invention. In one embodiment, the pre-bent rod 4 includes a middle portion 8 that is made and designed to be flexible interposed between two rigid end portions 9. The middle portion 8 and end portions 9 may be made as described above with respect to Figure 5. Methods of manufacturing metallic or metallic-hybrid tubular rods of various sizes, lengths and pre-bent configurations are well-known in the art. Additionally, or alternatively, the pre-bent structure and design of the rod 4 may offset a skew angle when two adjacent pedicle screws are not inserted parallel to one another, as described in further detail below with respect to Figure 23A.

Additional designs and materials used to create a flexible tubular rod 4 or flexible middle portion 8 are described below with respect to Figures 8-10. Figure 8 illustrates a perspective, cross-sectional view of a flexible tubular rod 4, or rod portion 8 in accordance with one embodiment of the invention. In this embodiment, the flexible rod 4, 8 is made

from a first metal tube 5 having a spiral groove 6 cut therein as described above with respect to Figures 4-7. A second tube 30 having spiral grooves 31 cut therein and having a smaller diameter than the first tube 5 is inserted into the cylindrical cavity of the first tube 5. In one embodiment, the second tube 30 has spiral grooves 31 which are cut in an opposite spiral direction with respect to the spiral grooves 6 cut in the first tube 5, such that the rotational torsion characteristics of the second tube 30 offset at least some of the rotational torsion characteristics of the first tube 5 The second flexible tube 30 is inserted into the core of the first tube to provide further durability and strength to the flexible rod 4, 8. The second tube 30 may be made of the same or different material than the first tube 5. In preferred embodiments, the material used to manufacture the first and second tubes 5 and 30, respectively, may be any one or combination of the following exemplary metals: stainless steel, iron steel, titanium, and titanium alloy.

Figure 9 illustrates a perspective, cross-sectional view of a flexible rod 4, 8 in accordance with a further embodiment of the invention. In this embodiment, the flexible rod 4, 8 includes an inner core made of a metallic wire 32 comprising a plurality of overlapping thin metallic yarns, such as steel yarns, titanium yarns, or titanium-alloy yarns. The wire 32 is encased by a metal, or metal hybrid, flexible tube 5 having spiral grooves 6 cut therein, as discussed above. The number and thickness of the metallic yarns in the wire 32 also affects the rigidity and flexibility of the rod 4, 8. By changing the number, thickness or material of the yarns flexibility can be increased or decreased. Thus, the number, thickness and/or material of the metallic yarns in the wire 32 can be adjusted to provide a desired rigidity and flexibility in accordance with a patient's particular needs. Those of ordinary skill in the art can easily determine the number, thickness and material of the yarns, in conjunction with a given flexibility of the tube 5 in order to achieve a desired rigidity v. flexibility profile for the rod 4, 8.

Figure 10 shows yet another embodiment of a flexible rod 4 wherein the flexible tube 5 encases a non-metallic, flexible core 34. The core 34 may be made from known

biocompatible shape memory alloys (e.g., NITINOL), or biocompatible synthetic materials such as: carbon fiber, Poly Ether Ether Ketone (PEEK), Poly Ether Ketone Ketone Ether Ketone (PEKKEK), or Ultra High Molecular Weight Poly Ethylene (UHMWPE).

Figure 11 illustrates a perspective view of another embodiment of the flexible rod 35 in which a plurality of metal wires 32, as described above with respect to Figure 9, are interweaved or braided together to form a braided metal wire rod 35. Thus, the braided metal wire rod 35 can be made from the same materials as the metal wire 32. In addition to the variability of the rigidity and flexibility of the wire 32 as explained above, the rigidity and flexibility of the braided rod 35 can be further modified to achieve desired characteristics by varying the number and thickness of the wires 32 used in the braided structure 35. For example, in order to achieve various flexion levels or ranges within the known flexion range of a normal healthy spine, those of ordinary skill in the art can easily manufacture various designs of the braided wire rod 35 by varying and measuring the flexion provided by different gauges, numbers and materials of the wire used to create the braided wire rod 35. In a further embodiment each end of the braided metal wire rod 35 is encased by a rigid metal cap or ring 9' as described above with respect to Figures 5-7, to provide a rod 4 having a flexible middle portion 8 and rigid end portions 9. In a further embodiment (not shown), the metal braided wire rod 35 may be utilized as a flexible inner core encased by a metal tube 5 having spiral grooves 6 cut therein to create a flexible metal rod 4 or rod portion 8, in a similar fashion to the embodiments shown in Figures 8-10. As used herein the term "braid" or "braided structure" encompasses two or more wires, strips, strands, ribbons and/or other shapes of material interwoven in an overlapping fashion. Various methods of interweaving wires, strips, strands, ribbons and/or other shapes of material are known in the art. Such interweaving techniques are encompassed by the present invention. In another exemplary embodiment (not shown), the flexible metal rod 35 includes a braided metal structure having two or more metal

strips, strands or ribbons interweaved in a diagonally overlapping pattern.

Figure 12A illustrates a further embodiment of a flexible connection unit 36 having two rigid end portions 9' and an exemplary number of rigid spacers 37. In one embodiment, the rigid end portions 9' and spacers can be made of bio-compatible metal or metal-hybrid materials as discussed above. The connection unit 36 further includes a flexible wire 32, as discussed above with respect to Figure 9', which traverses an axial cavity or hole (not shown) in each of the rigid end portions 9' and spacers 37. Figure 12B illustrates an exploded view of the connection unit 36 that further shows how the wire 32 is inserted through center axis holes of the rigid end portions 9' and spacers 37. As further shown in Figure 12B, each of the end portions 9' and spacers 37 include a male interlocking member 38 which is configured to mate with a female interlocking cavity (not shown) in the immediately adjacent end portion 9' or spacer 37. Figure 12 C illustrates an exploded side view and indicates with dashed lines the location and configuration of the female interlocking cavity 39 for receiving corresponding male interlocking members 38.

Figure 13 shows a perspective view of a flexible connection unit 40 in accordance with another embodiment of the invention. The connection 40 is similar to the connection unit 36 described above, however, the spacers 42 are configured to have the same shape and design as the rigid end portions 9'. Additionally, the end portions 9' have an exit hole or groove 44 located on a lateral side surface through which the wire 32 may exit, be pulled taut, and clamped or secured using a metal clip (not shown) or other known techniques. In this way, the length of the flexible connection unit 36 or 40 may be varied at the time of surgery to fit each patient's unique anatomical characteristics. In one embodiment, the wire 32 may be secured using a metallic clip or stopper (not shown). For example, a clip or stopper may include a small tubular cylinder having an inner diameter that is slightly larger than the diameter of the wire 32 to allow the wire 32 to pass therethrough. After the wire 32 is pulled to a desired tension through the tubular stopper,

the stopper is compressed so as to pinch the wire 32 contained therein. Alternatively, the wire 32 may be pre-secured using known techniques during the manufacture of the rod-like connection units 36, 40 having a predetermined number of spacers 37, 42 therein.

Figure 14 depicts a spinal fixation device according to another embodiment of the present invention. The spinal fixation device includes: at least two securing members 2 containing an elongate screw type shaft 10 having an external spiral thread 12, and a coupling assembly 14. The device further includes a plate connection unit 50, or simply "plate 50," configured to be securely connected to the coupling parts 14 of the two securing members 2. The plate 50 comprises two rigid connection members 51 each having a planar surface and joined to each other by a flexible middle portion 8. The flexible middle portion 8 may be made in accordance with any of the embodiments described above with respect to Figures 4-11. Each connection member 51 contains a coupling hole 52 configured to receive therethrough a second threaded shaft 54 (Fig. 15) of the coupling assembly 14.

As shown in Figure 15, the coupling assembly 14 of the securing member 2 includes a bolt head 56 adjoining the top of the first threaded shaft 10 and having a circumference or diameter greater than the circumference of the first threaded shaft 10. The second threaded shaft 54 extends upwardly from the bolt head 56. The coupling assembly 14 further includes a nut 58 having an internal screw thread configured to mate with the second threaded shaft 54, and one or more washers 60, for clamping the connection member 51 against the top surface of the bolt head 56, thereby securely attaching the plate 50 to the pedicle screw 2.

Figures 16A and 16B illustrate two embodiments of a plate connection unit 40 having at least two coupling members 51 and at least one flexible portion 8 interposed between and attached to two adjacent connection members 51. As shown in Figures 16A and 16B, the flexible middle portion 8 comprises a flexible metal braided wire structure 36 as described above with respect to Figure 11. However, the flexible portion 8 can be

designed and manufactured in accordance with any of the embodiments described above with respect to Figures 4-11, or combinations thereof. Figures 16C and 16D illustrate a side view and top view, respectively, of the plate 50 of Figure 16A. The manufacture of different embodiments of the flexible connection units 50 and 58 having different types of flexible middle portions 8, as described above, is easily accomplished using known metallurgy manufacturing processes.

Figure 16E illustrate a side view of a pre-bent plate connection unit 50', in accordance with a further embodiment of the invention. This plate connection unit 50' is similar to the plate 50 except that connection members 51' are formed or bent at an angle θ from a parallel plane 53 during manufacture of the plate connection unit 50'. As discussed above with respect to the pre-bent rod-like connection unit 4 of Figure 7, this pre-bent configuration is designed to emulate and support a natural curvature of the spine (e.g., lordosis). Additionally, or alternatively, this pre-bent structure may offset a skew angle when two adjacent pedicle screws are not inserted parallel to one another, as described in further detail below with respect to Figure 23A.

Figure 17 illustrates a perspective view of a plate connection unit 60 having two planar connection members 62 each having a coupling hole 64 therein for receiving the second threaded shaft 44 of the pedicle screw 2. A flexible middle portion 8 is interposed between the two connection members 62 and attached thereto. In one embodiment, the flexible middle portion 8 is made in a similar fashion to wire 32 described above with respect to Figure 9, except it has a rectangular configuration instead of a cylindrical or circular configuration as shown in Figure 9. It is understood, however, that the flexible middle portion 8 may be made in accordance with the design and materials of any of the embodiments previously discussed.

Figure 18 illustrates a perspective view of a further embodiment of the plate 60 of Figure 17 wherein the coupling hole 64 includes one or more nut guide grooves 66 cut into the top portion of the connection member 62 to seat and fix the nut 58 (Fig. 15) into

the coupling hole 64. The nut guide groove 66 is configured to receive and hold at least a portion of the nut 58 therein and prevent lateral sliding of the nut 58 within the coupling hole 64 after the connection member 62 has been clamped to the bolt head 56 of the pedicle screw 2.

Figure 19 illustrates a perspective view of a hybrid plate and rod connection unit 70 having a rigid rod-like connection member 4, 9 or 9', as described above with respect to Figures 4-7, at one end of the connection unit 70 and a plate-like connection member 51 or 62, as described above with respect to Figures 14-18, at the other end of the connection unit 70. In one embodiment, interposed between rod-like connection member 9 (9') and the plate-like connection member 52 (64) is a flexible member 8. The flexible member 8 may be designed and manufactured in accordance with any of the embodiments discussed above with reference to Figures 8-13.

Figure 20 illustrates a perspective view of a spinal fixation device that utilizes the hybrid plate and rod connection unit 70 of Figure 19. As shown in Figure 20, this fixation device utilizes two types of securing members 2 (e.g., pedicle screws), the first securing member 2' being configured to securely hold the plate connection member 42(64) as described above with respect to Figure 15, and the second securing member 2" being configured to securely hold the rod connection member 4, 9 or 9', as described above with respect to Figure 3.

Figure 21 illustrates a perspective top view of two spinal fixation devices, in accordance with the embodiment illustrated in Figure 1, after they are attached to two adjacent vertebrae 80 and 82 to flexibly stabilize the vertebrae. Figures 22A and 22B illustrate perspective top views of spinal fixation devices using the flexible stabilizing members 50 and 58 of Figures 16A and 16B, respectively, after they are attached to two or more adjacent vertebrae of the spine.

Figure 23A illustrates a side view of a spinal fixation device after it has been implanted into the pedicles of two adjacent vertebrae. As shown in this figure, the

pedicle screws 2 are mounted into the pedicle bone such that a center axis 80 of the screws 2 are offset by an angle θ from a parallel plane 82 and the center axes 80 of the two screws 2 are offset by an angle of approximately 2θ from each other. This type of non-parallel insertion of the pedicle screws 2 often results due to the limited amount of space that is available when performing minimally invasive surgery. Additionally, the pedicle screws 2 may have a tendency to be skewed from parallel due to a patient's natural curvature of the spine (e.g., lordosis). Thus, due to the non-parallel nature of how the pedicle screws 2 are ultimately fixed to the spinal pedicle, it is desirable to offset this skew when attaching a rod or plate connection unit to each of the pedicle screws 2.

Figure 23B illustrates a side view of the head of the pedicle screw in accordance with one embodiment of the invention. The screw 2 includes a cylindrical head 84 which is similar to the cylindrical head 16 described above with respect to Figure 3 except that the cylindrical head 84 includes a slanted seat 86 configured to receive and hold a flexible rod 4 in a slanted orientation that offsets the slant or skew θ of the pedicle screw 2 as described above. The improved pedicle screw 2 further includes a slanted stabilizing spacer 88 which is configured to securely fit inside the cavity of the cylindrical head 84 and hold down the rod 4 at the same slant as the slanted seat 86. The pedicle screw 2 further includes an outside threaded nut 22 configured to mate with spiral threads along the interior surface (not shown) of the cylindrical head 84 for clamping down and securing the slanted spacer 88 and the rod 4 to the slanted seat 86 and, hence, to the cylindrical head 84 of the pedicle screw 2.

Figure 23C shows a perspective view of the slanted spacer 88, in accordance with embodiment of the invention. The spacer 88 includes a circular middle portion 90 and two rectangular-shaped end portions 92 extending outwardly from opposite sides of the circular middle portion 90. Figure 23D shows a side view of the spacer 88 that further illustrates the slant from one end to another to compensate or offset the skew angle θ of the pedicle screw 2. Figure 23E illustrates a top view of the cylindrical head 84

configured to receive a rod 4 and slanted spacer 88 therein. The rod 4 is received through two openings or slots 94 in the cylindrical walls of the cylindrical head 84, which allow the rod 4 to enter the circular or cylindrical cavity 96 of the cylindrical head 84 and rest on top of the slanted seat 86 formed within the circular or cylindrical cavity 94. After the rod 4 is positioned on the slanted seat 86, the slanted stabilizing spacer 88 is received in the cavity 96 such that the two rectangular-shaped end portions 92 are received within the two slots 94, thereby preventing lateral rotation of the spacer 88 within the cylindrical cavity 96. Finally, the outside threaded nut 22 and fixing cap 26 are inserted on top of the slanted spacer 88 to securely hold the spacer 88 and rod 4 within the cylindrical head 84.

Figure 24 illustrates a perspective view of a marking and guidance device 100 for marking a desired location on the spinal pedicle where a pedicle screw 2 will be inserted and guiding the pedicle screw 2 to the marked location using a minimally invasive surgical technique. As shown in Figure 24, the marking device 100 includes a tubular hollow guider 52 which receives within its hollow an inner trocar 104 having a sharp tip 105 at one end that penetrates a patient's muscle and tissue to reach the spinal pedicle. the inner trocar 104 further includes a trocar grip 106 at the other end for easy insertion and removal of the trocar 104. In one embodiment, the marking and guidance device 100 includes a guider handle 108 to allow for easier handling of the device 100.

As shown in Figure 25, the trocar 104 is in the form of a long tube or cylinder having a diameter smaller than the inner diameter of the hollow of the guider 102 so as to be inserted into the hollow of the tubular guider 102. The trocar 104 further includes a sharp or pointed tip 105 for penetrating the vertebral body through the pedicle. The trocar 104 further includes a trocar grip 106 having a diameter larger than the diameter of the hollow of the guider tube 102 in order to stop the trocar 104 from sliding completely through the hollow. The trocar grip 106 also allows for easier handling of the trocar 104.

Figures 26A and 26B provide perspective views of the marking and guidance

device 100 after it has been inserted into a patient's back and pushed through the muscle and soft tissue to reach a desired location on the spinal pedicle. The desired location is determined using known techniques such as x-ray or radiographic imaging for a relatively short duration of time. After the marking and guidance device 100 has been inserted, prolonged exposure of the patient to x-ray radiation is unnecessary. As shown in Figure 26B, after the guidance tube 102 is positioned over the desired location on the pedicle, the inner trocar 104 is removed to allow fiducial pins (not shown) to be inserted into the hollow of the guidance tube 102 and thereafter be fixed into the pedicle.

Figures 27A and 27B illustrate perspective views of two embodiments of the fiducial pins 110 and 112, respectively. As mentioned above, the fiducial pins 110 and 112 according to the present invention are inserted and fixed into the spinal pedicle after passing through the hollow guider 102. The pins 110 and 112 have a cylindrical shape with a diameter smaller than the inner diameter of the hollow of the guider tube 102 in order to pass through the hollow of the guider 102. An end of each fiducial pin is a sharp point 111 configured to be easily inserted and fixed into the spinal pedicle of the spinal column. In one embodiment, as shown in Figure 27B, the other end of the fiducial pin incorporates a threaded shaft 114 which is configured to mate with an internally threaded tube of a retriever (not shown) for extraction of the pin 112. This retriever is described in further detail below with respect to Figure 32.

The fiducial pins 110, 112 are preferably made of a durable and rigid biocompatible metal (e.g., stainless steel, iron steel, titanium, titanium alloy) for easy insertion into the pedicle bone. In contrast to prior art guide wires, because of its comparatively shorter length and more rigid construction, the fiducial pins 110, 112 are easily driven into the spinal pedicle without risk of bending or structural failure. As explained above, the process of driving in prior art guidance wires was often very difficult and time-consuming. The insertion of the fiducial pins 110, 112 into the entry point on the spinal pedicle is much easier and convenient for the surgeon and, furthermore, does

not hinder subsequent procedures due to a guide wire protruding out of the patient's back.

Figure 28 shows a cylindrical pushing trocar 116 having a cylindrical head 118 of larger diameter than the body of the pushing trocar 116. The pushing trocar 116, according to the present invention, is inserted into the hollow of the guider 102 after the fiducial pin 110 or 112 has been inserted into the hollow of the guider 102 to drive and fix the fiducial pin 110 or 112 into the spinal pedicle. During this pin insertion procedure, a doctor strikes the trocar head 118 with a chisel or a hammer to drive the fiducial pin 110 and 112 into the spinal pedicle. In preferred embodiments, the pushing trocar 116 is in the form of a cylindrical tube, which has a diameter smaller than the inner diameter of the hollow of the guider tube 112. The pushing trocar 116 also includes a cylindrical head 118 having a diameter larger than the diameter of the pushing trocar 116 to allow the doctor to strike it with a chisel or hammer with greater ease. Of course, in alternative embodiments, a hammer or chisel is not necessarily required. For example, depending on the circumstances of each case, a surgeon may choose to push or tap the head 118 of the pushing trocar 116 with the palm of his or her hand or other object.

Figure 29A illustrates how a hammer or mallet 120 and the pushing trocar 116 may be used to drive the pin 110, 112 through the hollow of the guider tube 102 and into the designated location of the spinal pedicle. Figure 29B illustrates a perspective cross-sectional view of the spinal column after two fiducial pins 110, 112 have been driven and fixed into two adjacent vertebrae.

After the fiducial pins 110 or 112 have been inserted into the spinal pedicle as discussed above, in one embodiment, a larger hole or area centered around each pin 110, 112 is created to allow easer insertion and mounting of a pedicle screw 2 into the pedicle bone. The larger hole is created using a cannulated awl 122 as shown in Figure 30. The cannulated awl 122 is inserted over the fiducial pin 110, 112 fixed at the desired position of the spinal pedicle. The awl 122 is in the form of a cylindrical hollow tube wherein an internal diameter of the hollow is larger than the outer diameter of the fiducial

pins 110 and 112 so that the pins 110, 112 may be inserted into the hollow of the awl 122. The awl 122 further includes one or more sharp teeth 124 at a first end for cutting and grinding tissue and bone so as to create the larger entry point centered around the fiducial pin 110, 112 so that the pedicle screw 2 may be more easily implanted into the spinal pedicle. Figure 31 illustrates a perspective cross-sectional view of a patient's spinal column when the cannulated awl 122 is inserted into a minimally invasive incision in the patient's back, over a fiducial pin 110, 112 to create a larger insertion hole for a pedicle screw 2 (not shown). As shown in Figure 31, a retractor 130 has been inserted into the minimally invasive incision over the surgical area and a lower tubular body of the retractor 130 is expanded to outwardly push surrounding tissue away from the surgical area and provide more space and a visual field for the surgeon to operate. In order to insert the retractor 130, in one embodiment, the minimally invasive incision is made in the patient's back between and connecting the two entry points of the guide tube 102 used to insert the two fiducial pins 110, 112. Before the retractor 130 is inserted, prior expansion of the minimally invasive incision is typically required using a series of step dilators (not shown), each subsequent dilator having a larger diameter than the previous dilator. After the last step dilator is in place, the retractor 130 is inserted with its lower tubular body in a retracted, non-expanded state. After the retractor 130 is pushed toward the spinal pedicle to a desired depth, the lower tubular portion is then expanded as shown in Figure 31. The use of step dilators and retractors are well known in the art.

After the cannulated awl 122 has created a larger insertion hole for the pedicle screw 2, in one embodiment, the fiducial pin 110, 112 is removed. As discussed above, if the fiducial pin 112 has been used, a retrieving device 140 may be used to remove the fiducial pin 112 before implantation of a pedicle screw 2. As shown in Figure 32, the retriever 140 comprises a long tubular or cylindrical portion having an internally threaded end 142 configured to mate with the externally threaded top portion 114 of the fiducial pin 112. After the retriever end 142 has been screwed onto the threaded end 114, a doctor

my pull the fiducial pin 112 out of the spinal pedicle. In another embodiment, if the fiducial pin 110 without a threaded top portion has been used, appropriate tools (e.g., specially designed needle nose pliers) may be used to pull the pin 110 out.

In alternate embodiments, the fiducial pins 110, 112 are not extracted from the spinal pedicle. Instead, a specially designed pedicle screw 144 may be inserted into the spinal pedicle over the pin 110, 112 without prior removal of the pin 110, 112. As shown in Figure 33, the specially designed pedicle screw 144 includes an externally threaded shaft 10 and a coupling assembly 14 (Fig. 3) that includes a cylindrical head 16 (Fig. 3) for receiving a flexible rod-shaped connection unit 4 (Figs. 4-13). Alternatively, the coupling assembly 14 may be configured to receive a plate-like connection unit as shown in Figures 14-20. The pedicle screw 144 further includes a longitudinal axial channel (not shown) inside the threaded shaft 10 having an opening 146 at the tip of the shaft 10 and configured to receive the fiducial pin 110, 112 therein.

Figure 34 illustrates a perspective cross-sectional view of the patient's spinal column after a pedicle screw 2 has been inserted into a first pedicle of the spine using an insertion device 150. Various types of insertion devices 150 known in the art may be used to insert the pedicle screw 2. As shown in Figure 34, after a first pedicle screw 2 has been implanted, the retractor 130 is adjusted and moved slightly to provide space and a visual field for insertion of a second pedicle screw at the location of the second fiducial pin 110, 112.

Figure 35 provides a perspective, cross sectional view of the patient's spinal column after two pedicle screws 2 have been implanted in two respective adjacent pedicles of the spine, in accordance with the present invention. After the pedicle screws 2 are in place, a flexible rod, plate or hybrid connection unit as described above with respect to Figures 4-20 may be connected to the pedicle screws to provide flexible stabilization of the spine. Thereafter, the retractor 130 is removed and the minimally invasive incision is closed and/or stitched.

Various embodiments of the invention have been described above. However, those of ordinary skill in the art will appreciate that the above descriptions of the preferred embodiments are exemplary only and that the invention may be practiced with modifications or variations of the devices and techniques disclosed above. Those of ordinary skill in the art will know, or be able to ascertain using no more than routine experimentation, many equivalents to the specific embodiments of the invention described herein. Such modifications, variations and equivalents are contemplated to be within the spirit and scope of the present invention as set forth in the claims below.

CLAIMS

What is claimed is:

1. A spinal fixation device comprising:

first and second securing members each having a threaded shaft member configured to be inserted into designated entry points of two respective and adjacent vertebrae, each securing member having a coupling assembly for receiving and securing respective end portions of a connection unit therein; and

a flexible connection unit having a first end portion configured to be received and secured within the coupling assembly of the first securing member and a second end portion configured to be received and secured within the coupling assembly of the second securing member, wherein the flexible connection unit comprises a metal tube having a spiral groove formed along at least a portion of its tubular body so as to provide flexibility to the connection unit.

2. The spinal fixation device of claim 1 wherein said first and second end portions are configured as rod-like connection members and said respective coupling assemblies are configured to receive and secure said first and second end portions.

3. The spinal fixation device of claim 1 wherein said first and second end portions are configured as plate-like connection members and said respective coupling assemblies are configured to receive and secure said first and second end portions.

4. The spinal fixation device of claim 1 wherein said first end portion is configured as a rod-like connection member and said second end portion is configured as a plate-like connection member and said coupling assembly of said first securing member is configured to receive and secure said first end portion and said coupling assembly of said

second securing member is configured to receive and secure said second end portion.

5. The spinal fixation device of claim 1 wherein said flexible connection unit comprises a flexible middle portion interposed between two rigid portions, wherein the flexible middle portion comprises said portion of the tubular body of the metal tube having said spiral grooves therein.

6. The spinal fixation device of claim 1 wherein said flexible connection unit is formed in a pre-bent configuration.

7. The spinal fixation device of claim 1 wherein said first and second securing members are pedicle screws and said respective coupling assemblies each comprise a slanted seat for receiving an end portion of said flexible connection unit at an angle θ and a slanted spacer configured to firmly secure the end portion of the flexible connection unit against the slanted seat.

8. A spinal fixation device, comprising:

first and second securing members each having a threaded shaft member configured to be inserted into designated entry points of two respective and adjacent vertebrae, each securing member further having a coupling assembly for receiving and securing respective end portions of a connection unit therein; and

a flexible connection unit having a first end portion configured to be received and secured within the coupling assembly of the first securing member and a second end portion configured to be received and secured within the coupling assembly of the second securing member, wherein the flexible connection unit comprises at least one metal wire comprising a plurality of metal yarns to provide flexibility to the connection unit.

9. The spinal fixation device of claim 8 wherein said first and second end portions are configured as rod-like connection members and said respective coupling assemblies are configured to receive and secure said first and second end portions.

10. The spinal fixation device of claim 8 wherein said first and second end portions are configured as plate-like connection members and said respective coupling assemblies are configured to receive and secure said first and second end portions.

11. The spinal fixation device of claim 8 wherein said first end portion is configured as a rod-like connection member and said second end portion is configured as a plate-like connection member and said coupling assembly of said first securing member is configured to receive and secure said first end portion and said coupling assembly of said second securing member is configured to receive and secure said second end portion.

12. The spinal fixation device of claim 8 wherein said flexible connection unit comprises a flexible middle portion interposed between to rigid portions, wherein the flexible middle portion comprises said metal wire.

13. The spinal fixation device of claim 8 wherein said flexible connection unit is formed in a pre-bent configuration.

14. The spinal fixation device of claim 8 wherein said first and second securing members are pedicle screws and said respective coupling assemblies each comprise a slanted seat for receiving an end portion of said flexible connection unit at an angle θ and a slanted spacer configured to firmly secure the end portion of the flexible connection unit against the slanted seat.

15. The spinal fixation device of claim 8 wherein said flexible connection unit comprises a plurality of metal wires interwoven in a braided structure to provide a desired level of flexibility to said flexible connection unit.

16. The spinal fixation device of claim 15 wherein said flexible connection unit comprises a flexible middle portion interposed between to rigid portions, wherein the flexible middle portion comprises said plurality of metal wires interwoven in a braided structure.

17. A spinal fixation device, comprising:

first and second securing members each having a threaded shaft member configured to be inserted into designated entry points of two respective and adjacent vertebrae, each securing member further having a coupling assembly for receiving and securing respective end portions of a connection unit therein; and

a flexible connection unit having a first end portion configured to be received and secured within the coupling assembly of the first securing member and a second end portion configured to be received and secured within the coupling assembly of the second securing member, wherein the flexible connection unit comprises at least one metal spacer interposed between the first and second end portions and a flexible metal material located in a longitudinal axial channel of the at least one metal spacer to provide flexibility to the flexible connection unit.

18. The spinal fixation device of claim 17 wherein said at least one metal spacer further comprises a male interlocking member and a female interlocking cavity each configured to structurally interlock with respective adjacent metal spacers or end portions having a corresponding female interlocking cavity and male interlocking member, respectively.

19. The spinal fixation device of claim 17 wherein said flexible metal material comprises a metal wire comprising a plurality of metal yarns.

20. The spinal fixation device of claim 17 wherein said flexible metal material comprises a braided metal wire structure comprising a plurality of interwoven metal wires.

21. The spinal fixation device of claim 17 wherein said first and second end portions are configured as rod-like connection members and said respective coupling assemblies are configured to receive and secure said first and second end portions.

22. The spinal fixation device of claim 17 wherein said first and second end portions are configured as plate-like connection members and said respective coupling assemblies are configured to receive and secure said first and second end portions.

23. The spinal fixation device of claim 17 wherein said first end portion is configured as a rod-like connection member and said second end portion is configured as a plate-like connection member and said coupling assembly of said first securing member is configured to receive and secure said first end portion and said coupling assembly of said second securing member is configured to receive and secure said second end portion.

24. A flexible metal connection unit for use in a spinal fixation device, comprising a first metal tube having a spiral groove formed along at least a portion of its tubular body so as to provide flexibility to the connection unit

25. The flexible metal connection unit of claim 24 further comprising a second metal tube having a smaller diameter than said first metal tube such that the second metal tube is configured to fit inside a longitudinal axial channel of the first metal tube, wherein said second metal tube comprises a second spiral groove formed along at least a portion of its tubular body.

26. The flexible metal connection unit of claim 24 further comprising a metal wire comprising a plurality of metal yarns, wherein said metal wire is configured to fit inside a longitudinal axial channel of said first metal tube.

27. The flexible metal connection unit of claim 24 further comprising a braided metal wire structure comprising a plurality of interwoven metal wires, wherein said braided metal wire structure is configured to fit inside a longitudinal axial channel of said first metal tube.

28. The flexible metal connection unit of claim 24 further comprising a flexible core material located within a longitudinal axial channel of said first metal tube.

29. The flexible connection unit of claim 28 wherein said flexible core material consists of at least one of the following: carbon graphite, PEEK, PEEKEK, NITINOL, UHMWPE.

30. The flexible connection unit of claim 24 further comprising a flexible middle portion interposed between two rigid portions, wherein the flexible middle portion comprises said portion of the tubular body of the metal tube having said spiral grooves therein.

31. The flexible connection unit of claim 24 wherein said flexible connection unit is formed in a pre-bent configuration.

32. A flexible connection unit for use in a spinal fixation device, comprising at least one metal wire having a plurality of metal yarns wherein the material, thickness and number of yarns determines a level of flexibility of the flexible connection unit.

33. The flexible connection unit of claim 32 further comprising a flexible middle portion interposed between to rigid portions, wherein the flexible middle portion comprises said metal wire.

34. The flexible connection unit of claim 32 wherein said flexible connection unit is formed in a pre-bent configuration.

35. A flexible connection unit for use in a spinal fixation device comprising a braided metal structure.

36. The flexible connection unit of claim 35 wherein said braided structure comprises a plurality of metal wires interwoven in a braided fashion to provide a desired level of flexibility to said flexible connection unit.

37. The flexible connection unit of claim 36 further comprising a flexible middle portion interposed between to rigid portions, wherein the flexible middle portion comprises said plurality of metal wires interwoven in a braided structure.

38. The flexible connection unit of claim 35 wherein said flexible connection unit is formed in a pre-bent configuration.

39. A flexible connection unit for use in a spinal fixation device, comprising at least one metal spacer interposed between two end portions and a flexible metal material located in a longitudinal axial channel of the at least one metal spacer to provide flexibility to the flexible connection unit.

40. The flexible connection unit of claim 39 wherein said at least one metal spacer further comprises a male interlocking member and a female interlocking cavity each configured to structurally interlock with respective adjacent metal spacers or end portions having a corresponding female interlocking cavity and male interlocking member, respectively.

41. The flexible connection unit of claim 39 wherein said flexible metal material comprises a metal wire comprising a plurality of metal yarns.

42. The flexible connection unit of claim 39 wherein said flexible metal material comprises a braided metal wire structure comprising a plurality of interwoven metal wires.

43. A pedicle screw for use in a spinal fixation device, comprising a threaded shaft portion configured to be inserted and secured to a pedicle bone of a spinal column, a coupling assembly connected to a top end of the threaded shaft portion, wherein the coupling assembly comprises a slanted seat for receiving an end portion of said flexible connection unit at an angle θ and a slanted spacer configured to firmly secure the end portion of the flexible connection unit against the slanted seat.

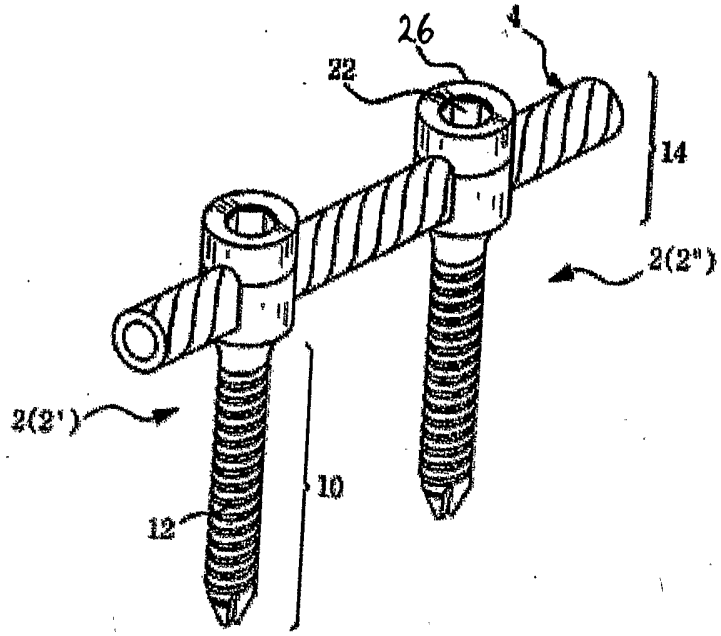

Figure 1

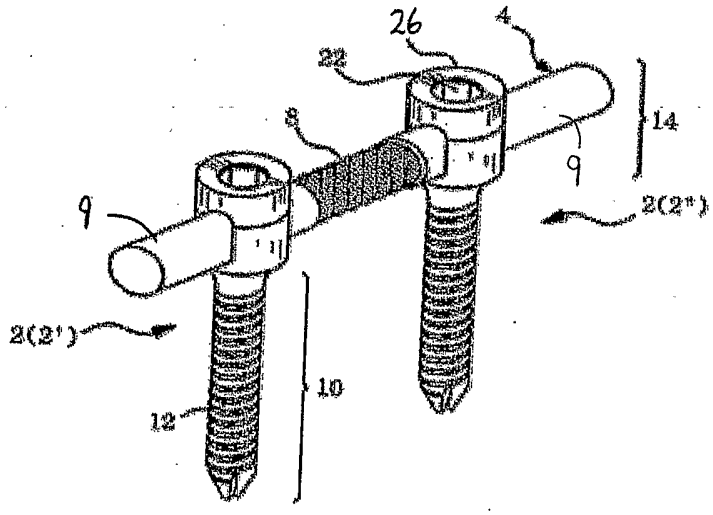

Figure 2

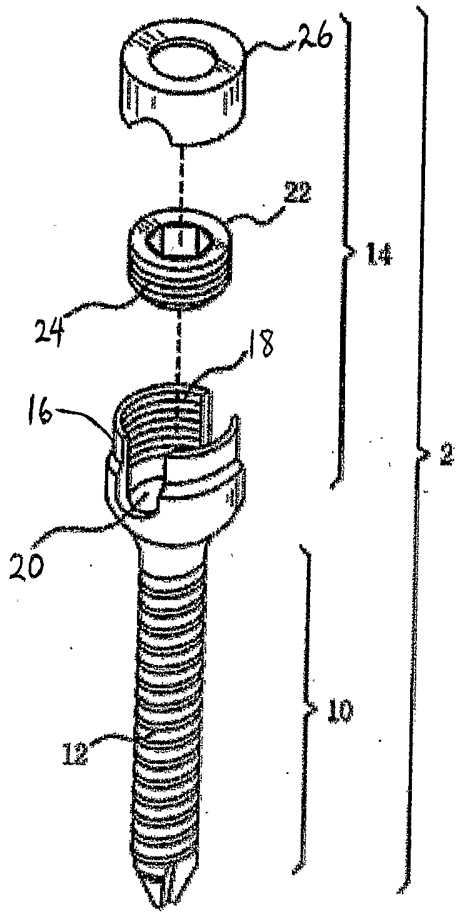

Figure 3

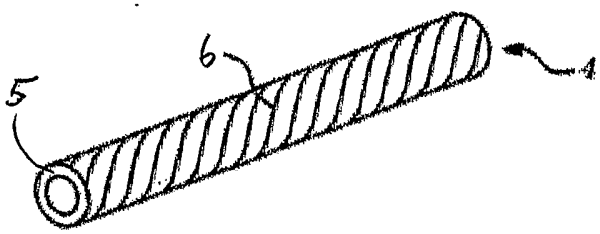

Figure 4

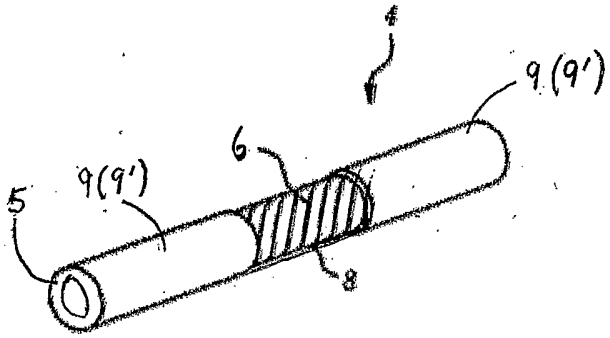

Figure 5

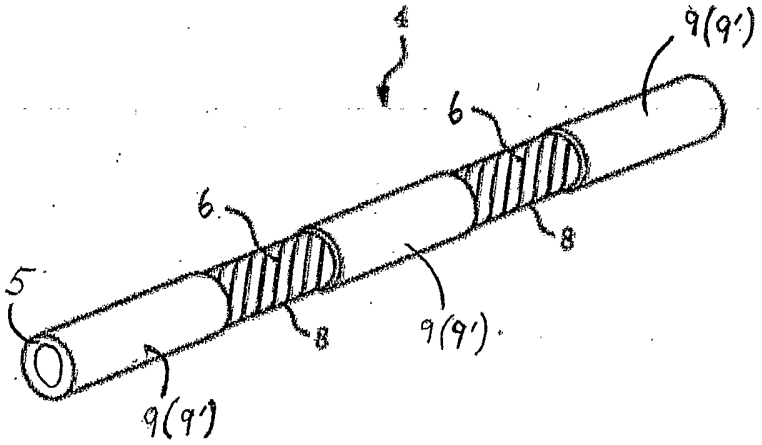

Figure 6

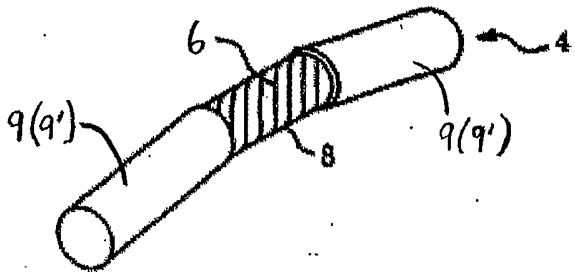

Figure 7

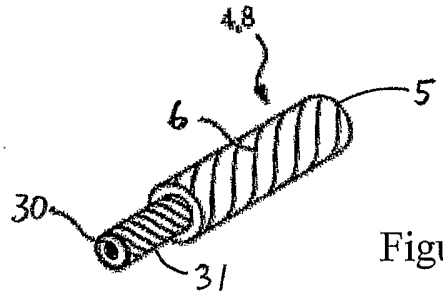

Figure 8

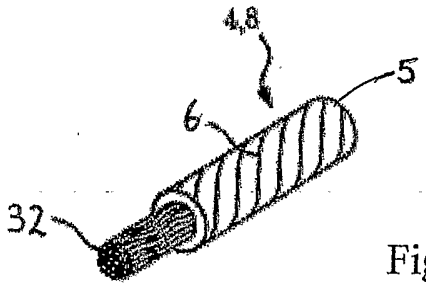

Figure 9

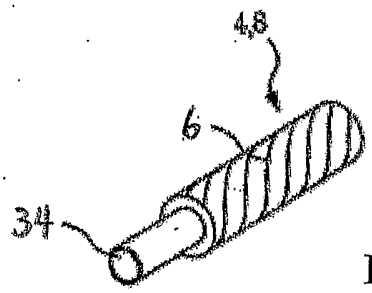

Figure 10

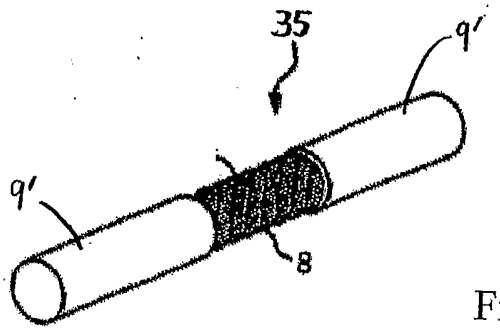

Figure 11

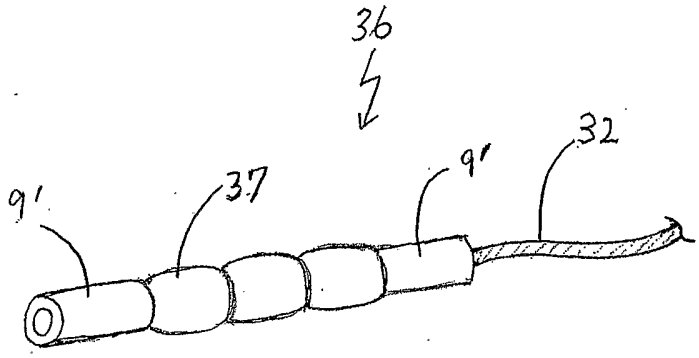

Figure 12A

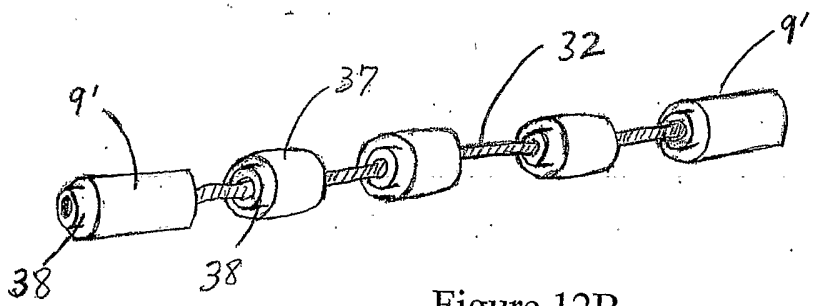

Figure 12B

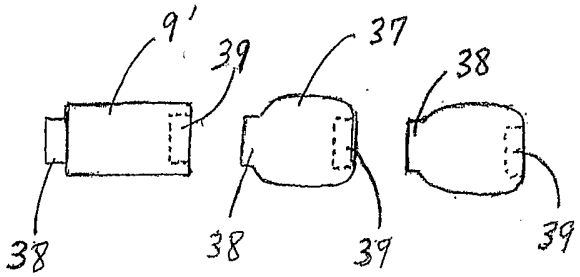

Figure 12C

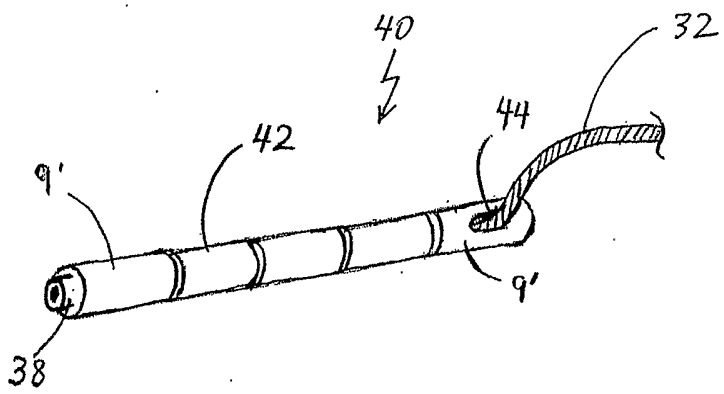

Figure 13

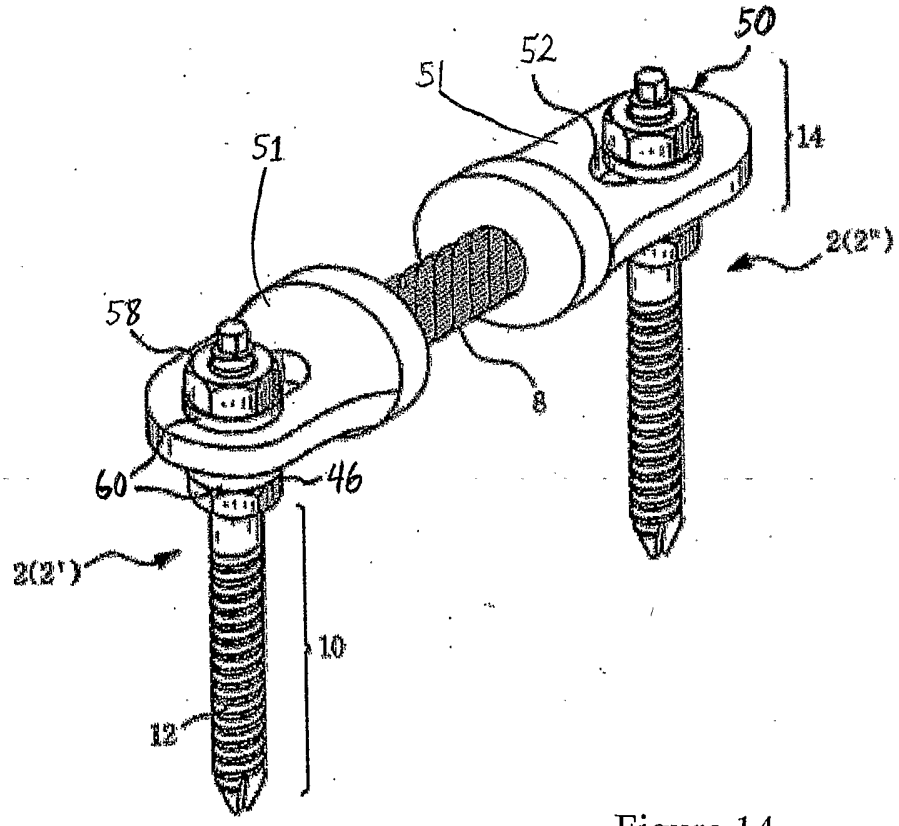

Figure 14

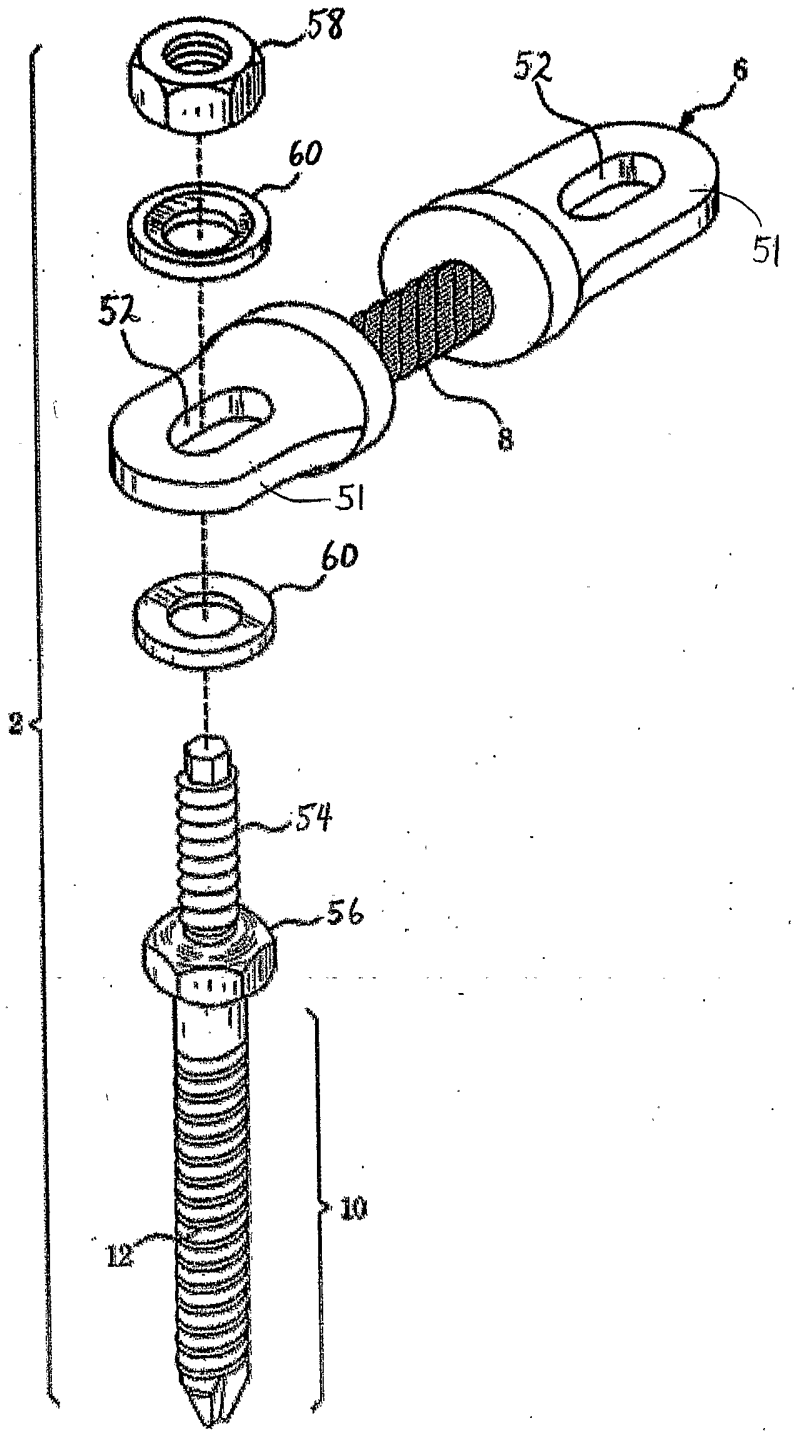

Figure 15

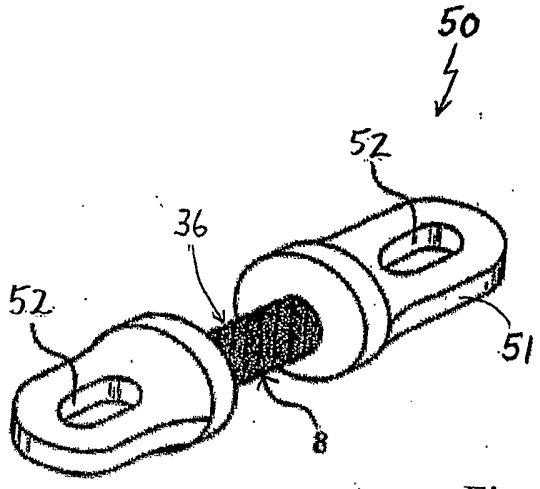

Figure 16A

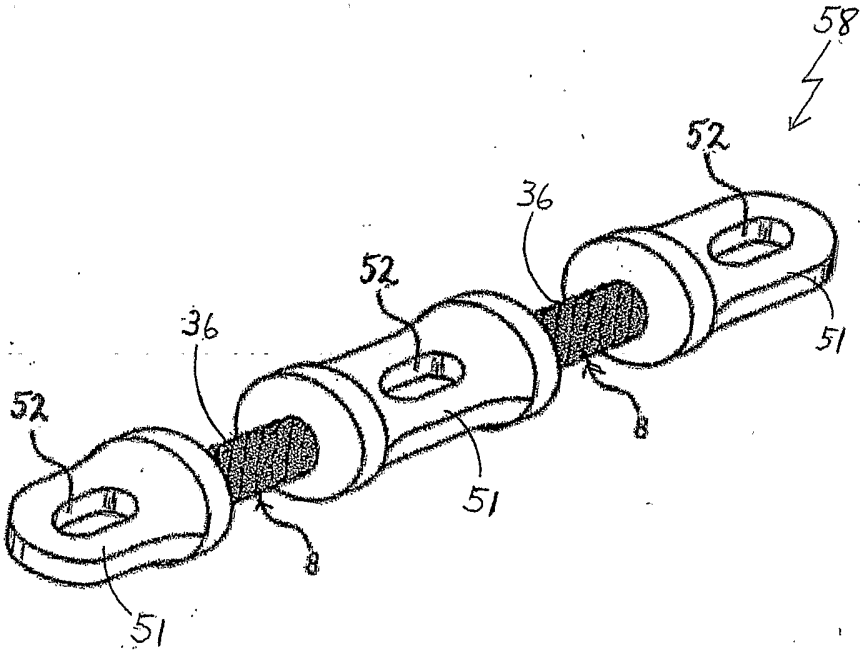

Figure 16B

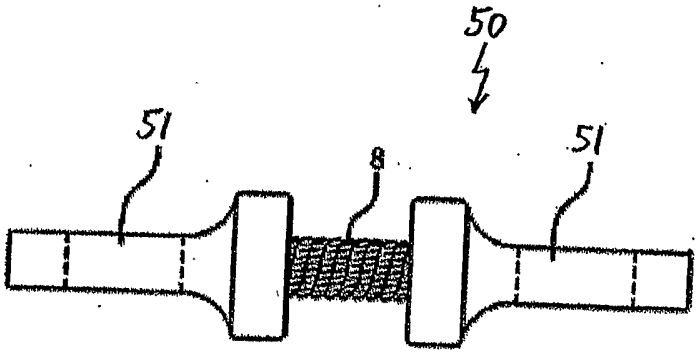

Figure 16C

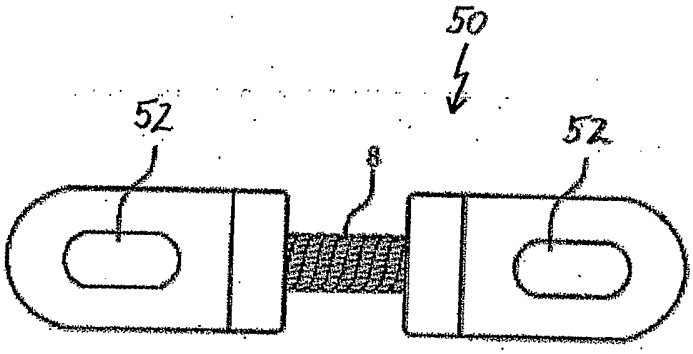

Figure 16D

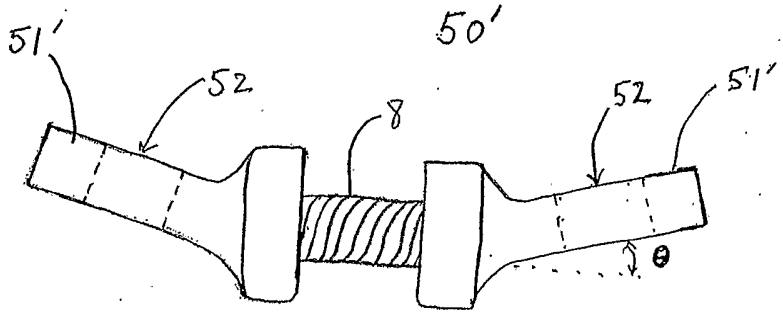

Figure 16E

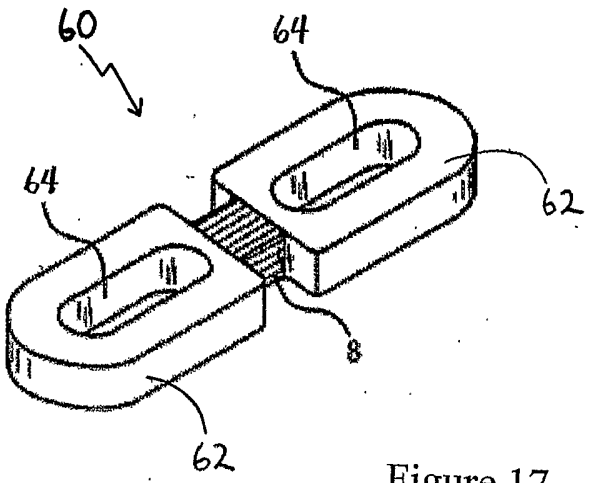

Figure 17

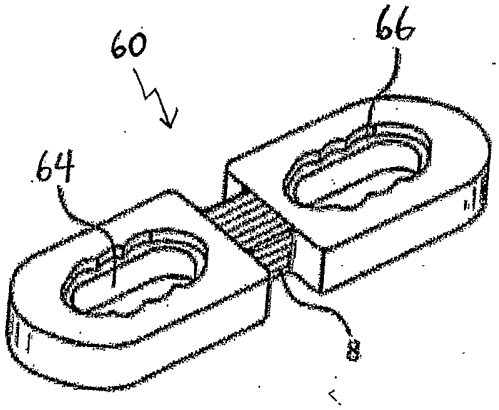

Figure 18

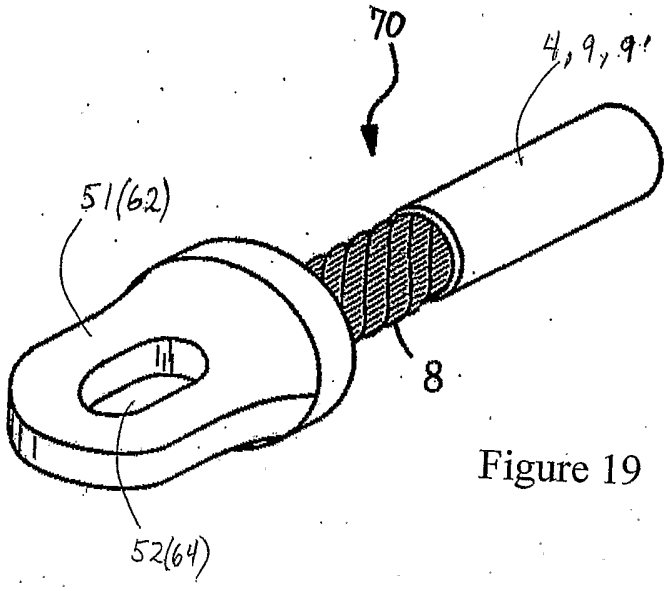

Figure 19

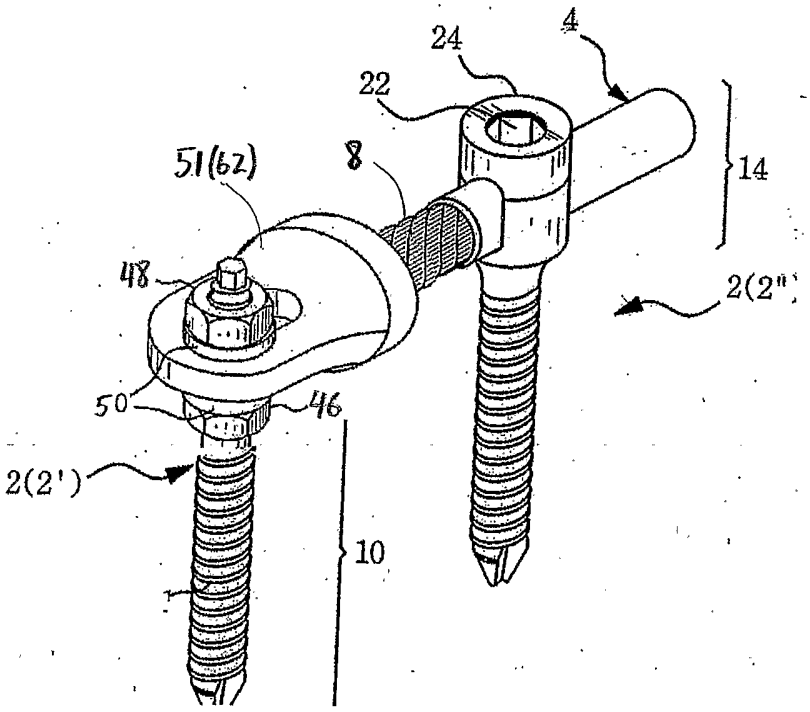

Figure 20

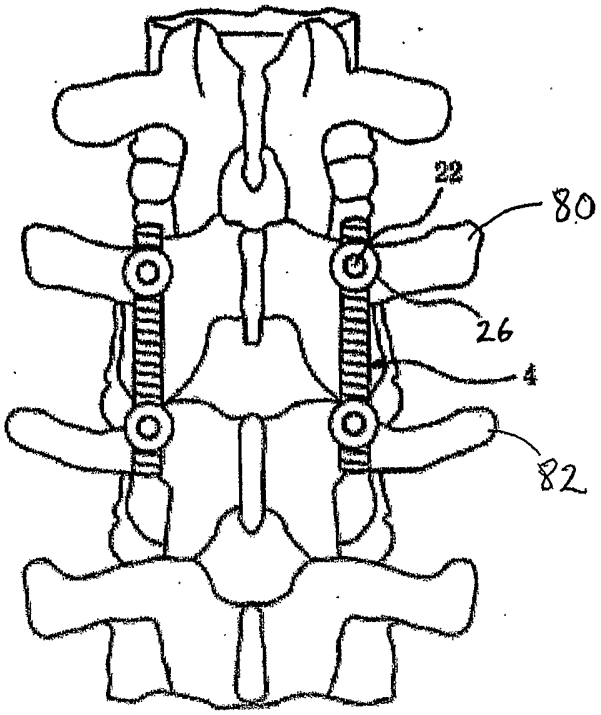

Figure 21

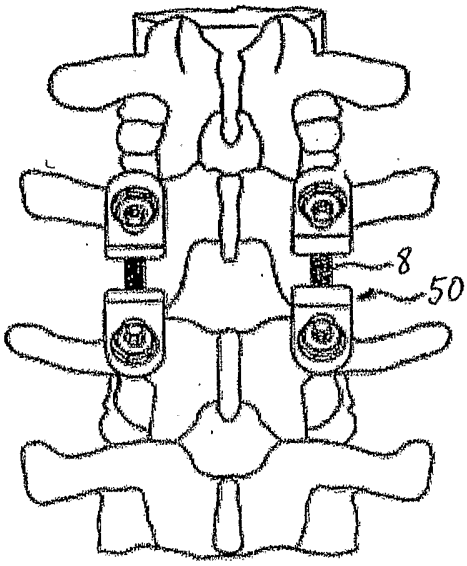

Figure 22A

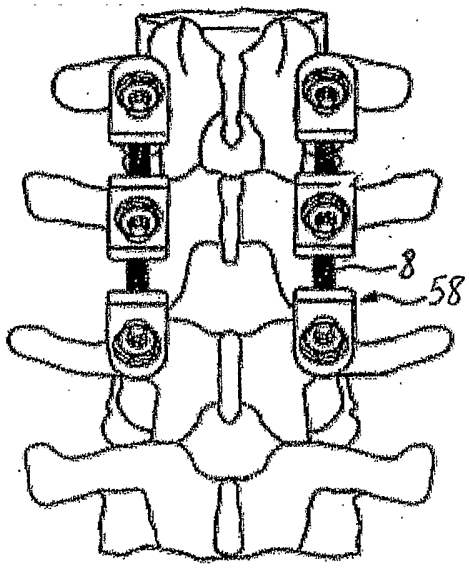

Figure 22B

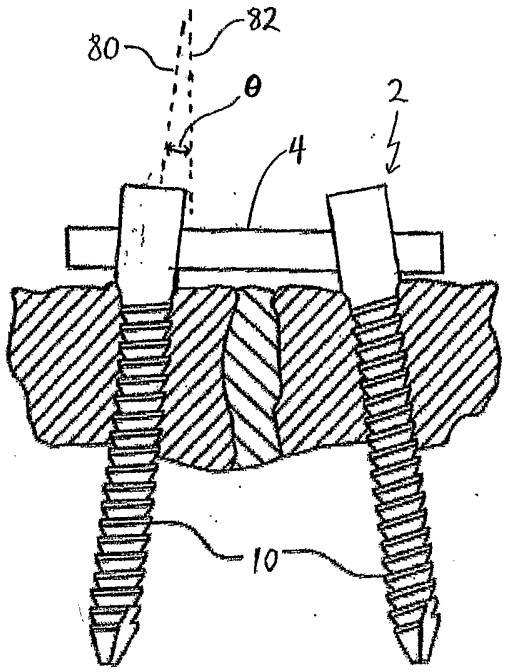

Figure 23A

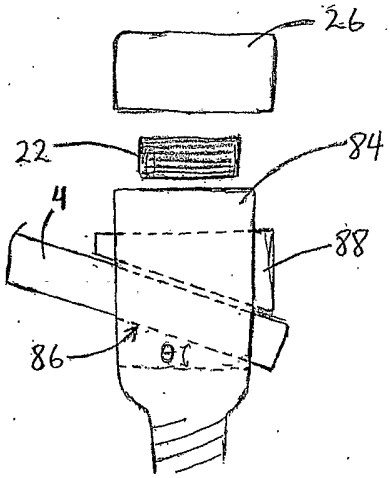

Figure 23B

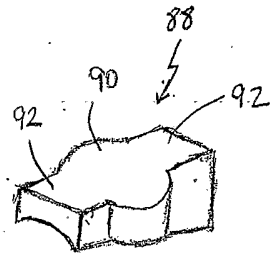

Figure 23C

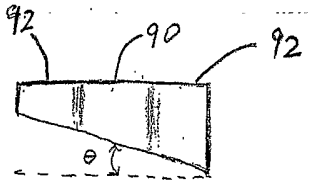

Figure 23D

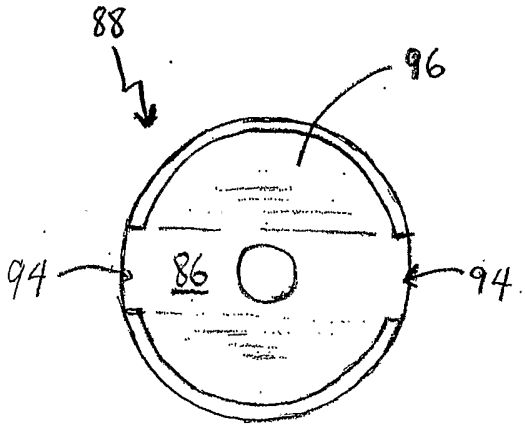

Figure 23E

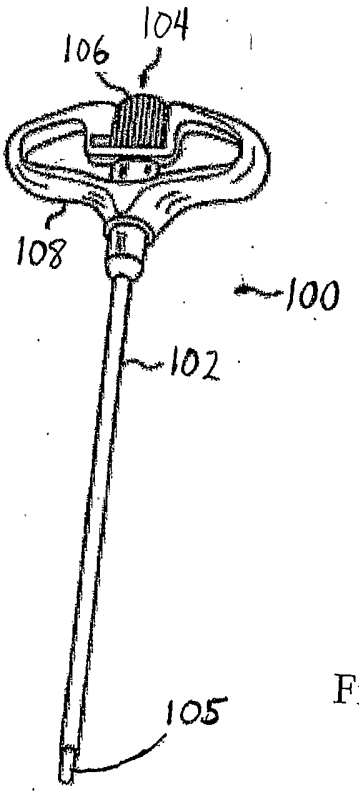

Figure 24

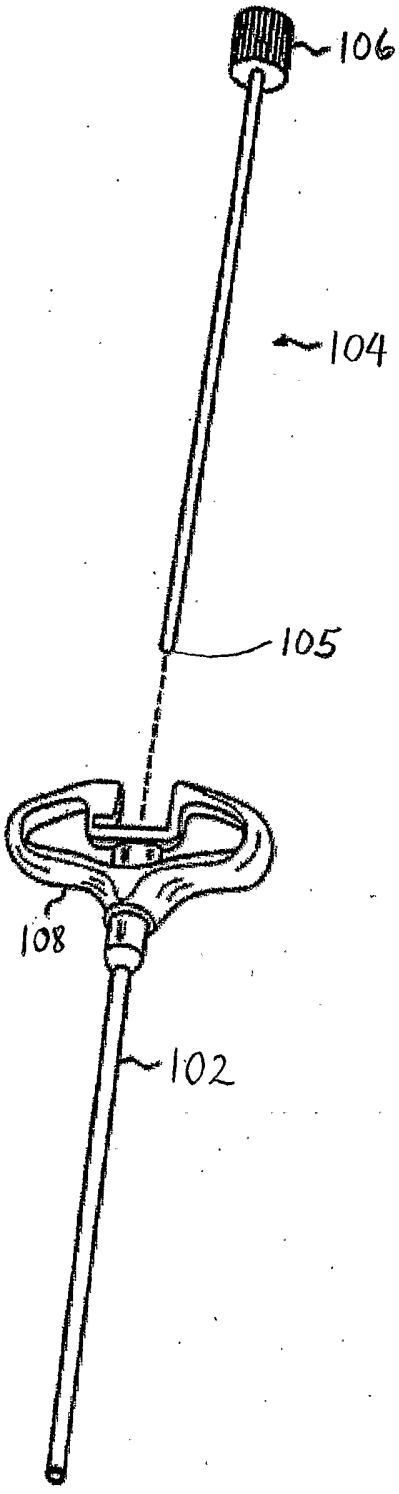

Figure 25

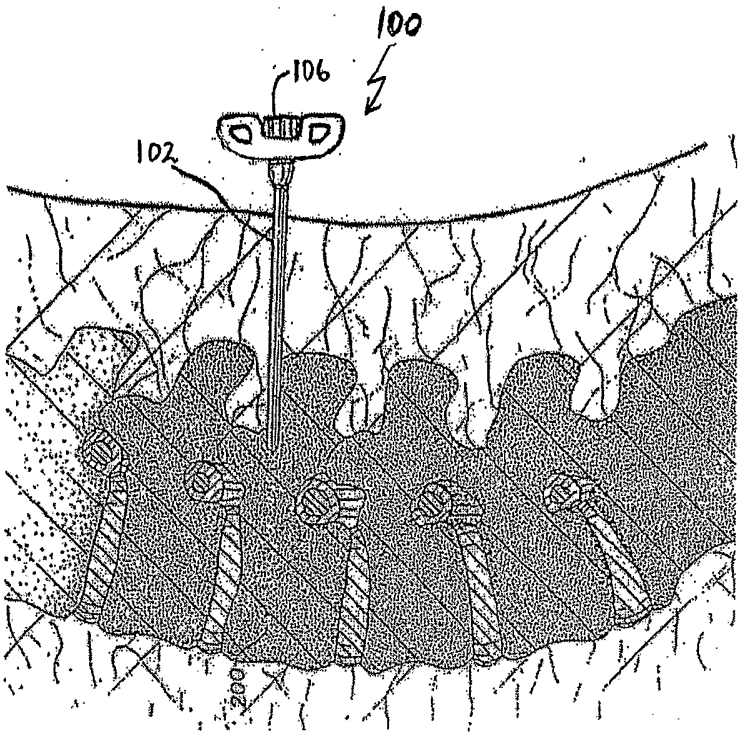

Figure 26A

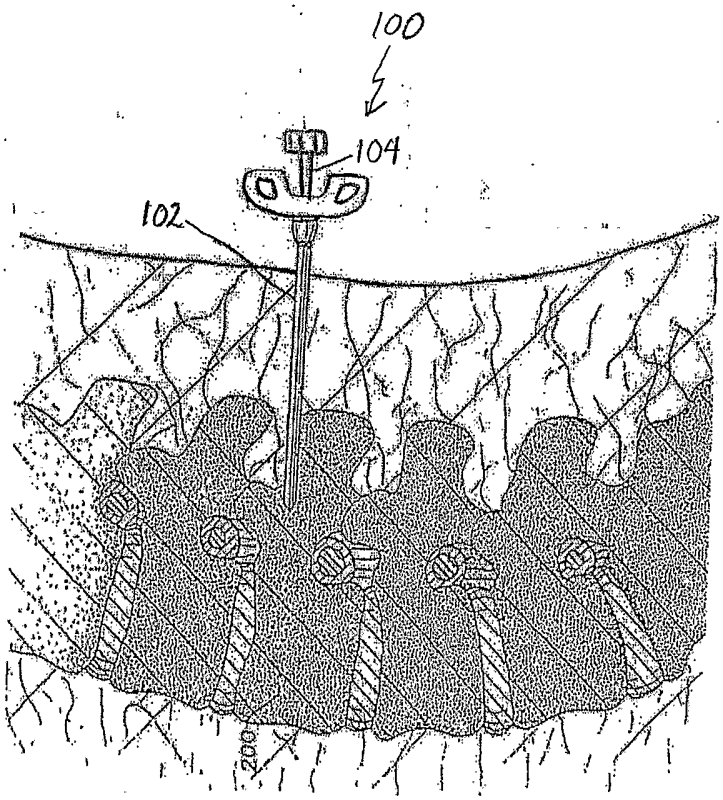

Figure 26B

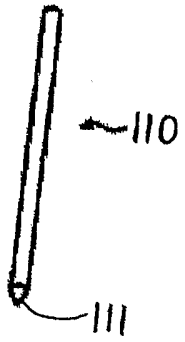

Figure 27A

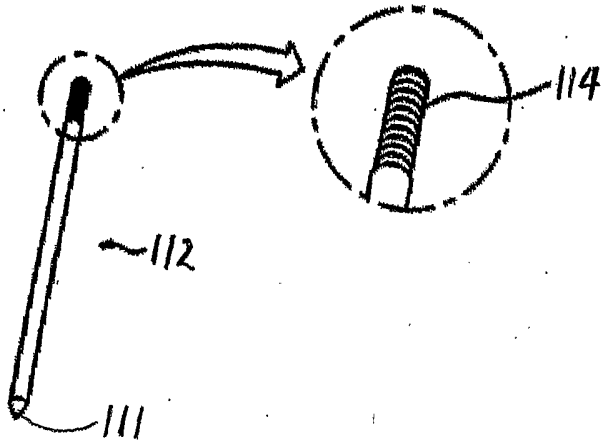

Figure 27B

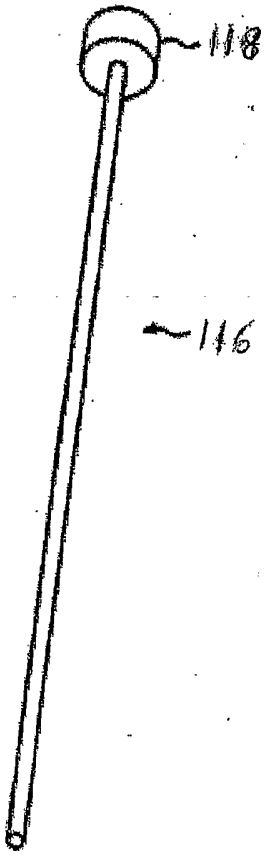

Figure 28

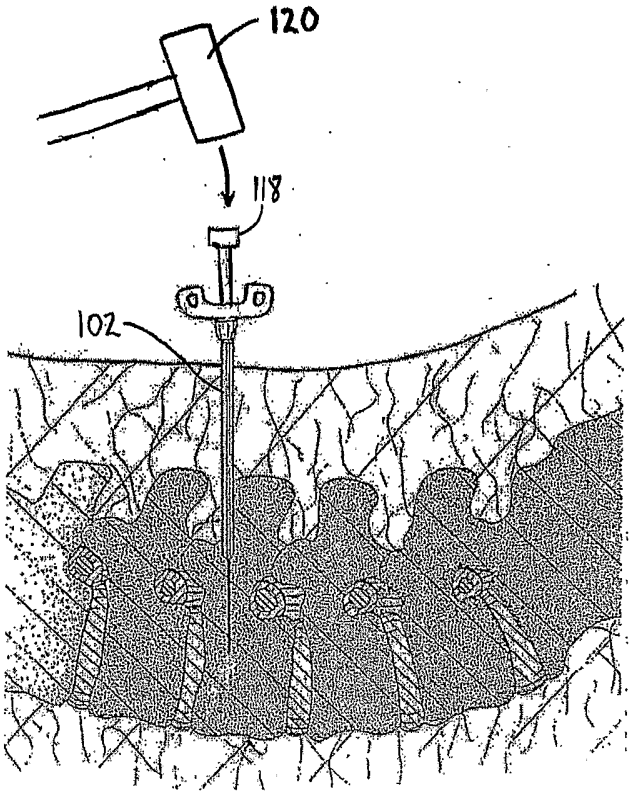

Figure 29A

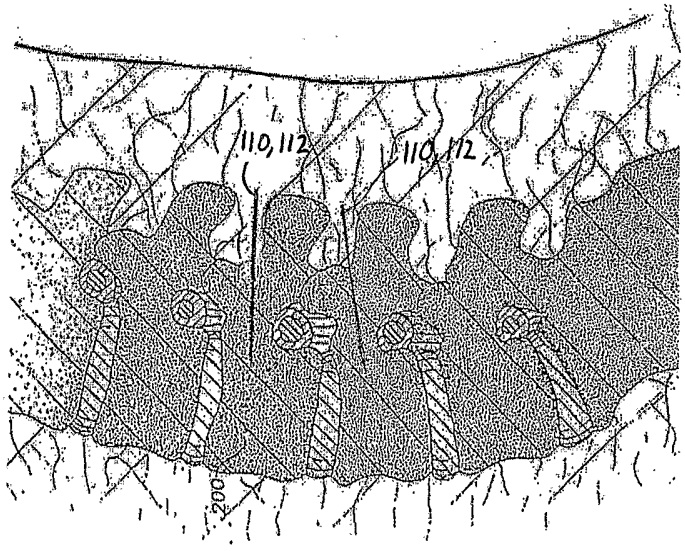

Figure 29B

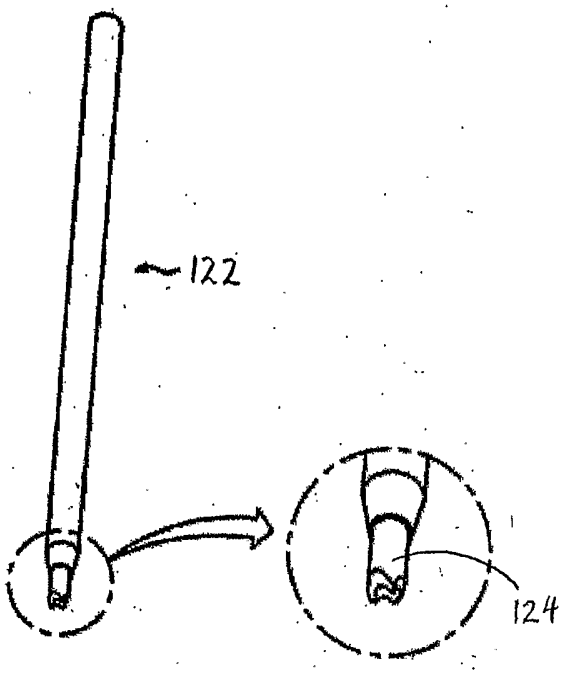

Figure 30

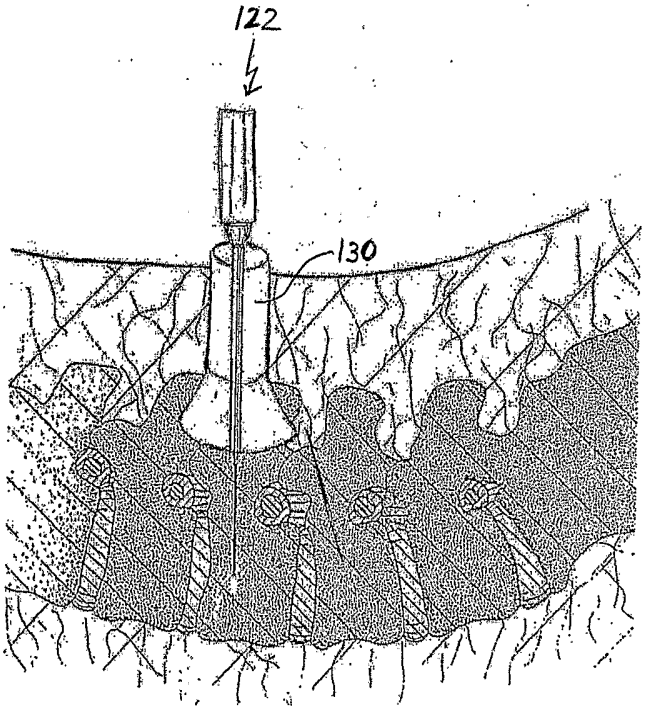

Figure 31

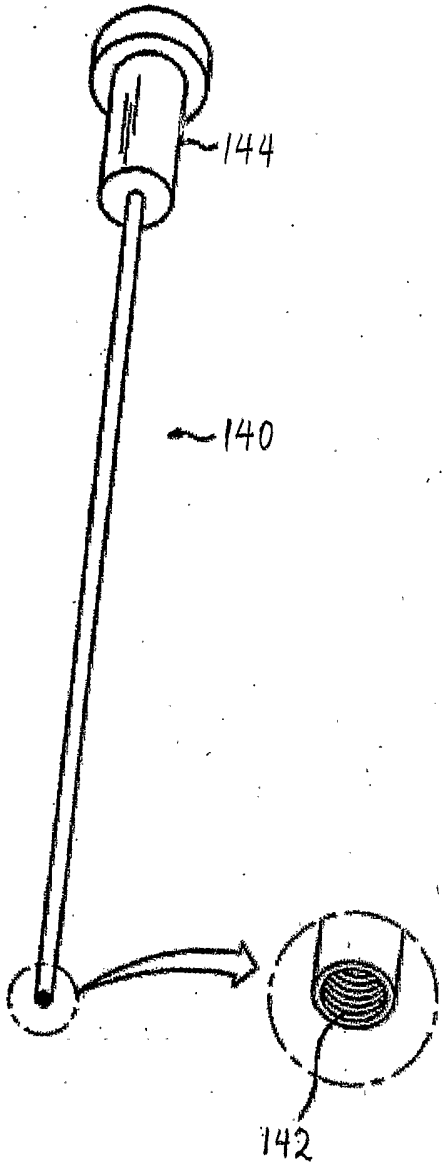

Figure 32

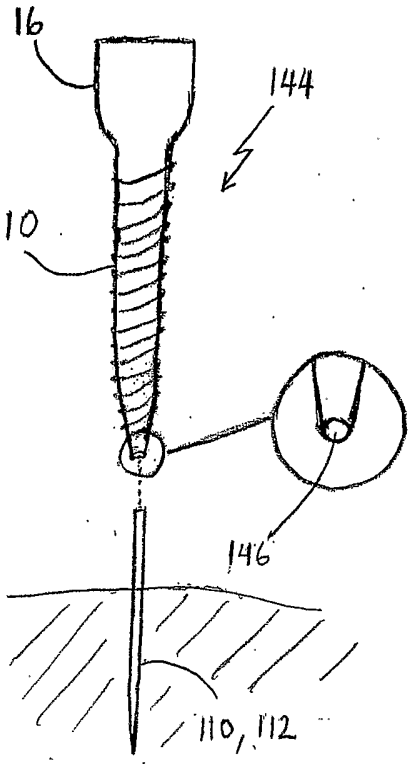

Figure 33

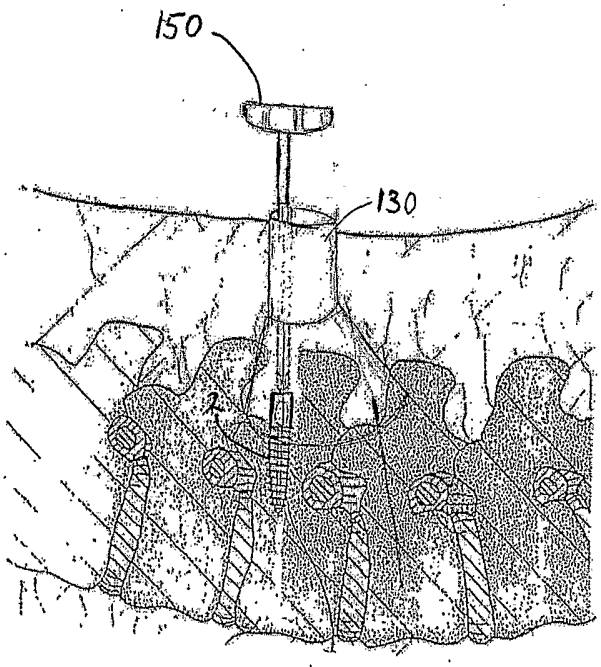

Figure 34

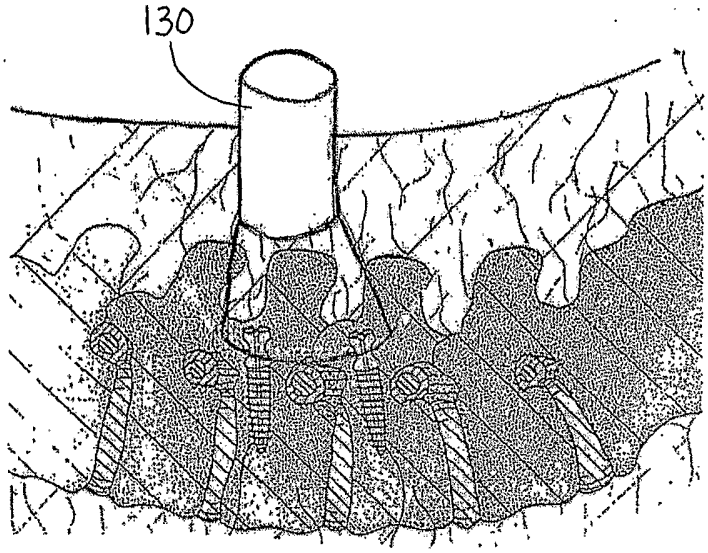

Figure 35