Dec. 2, 1924. 1,517,910

F. KIRSCHNER

PLANT FOR ELECTROPLATING METAL

Original Filed Aug. 24, 1921

Fig. 1

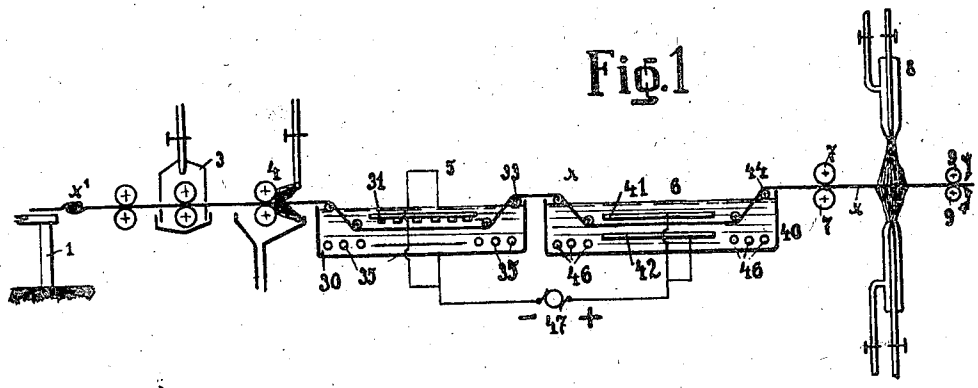

Fig. 2

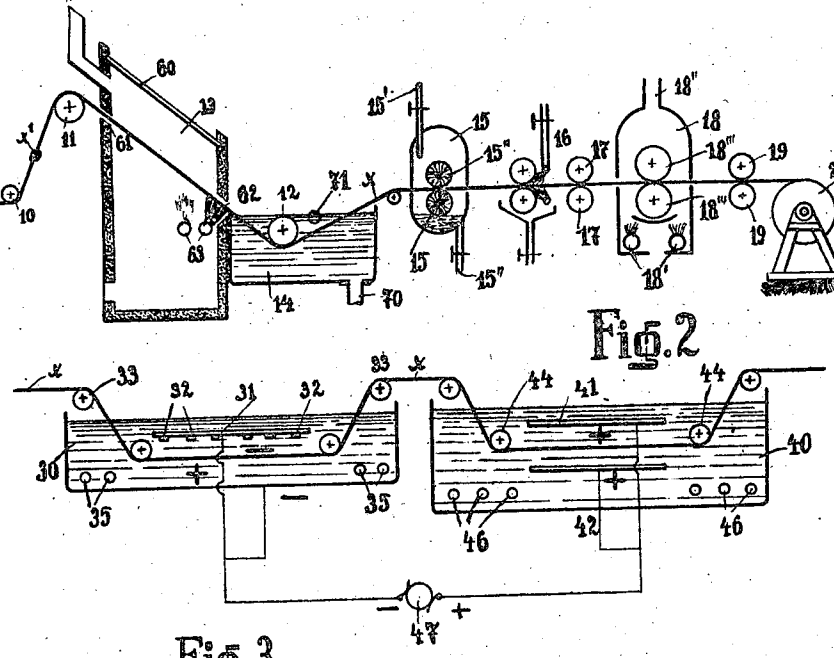

Fig. 3

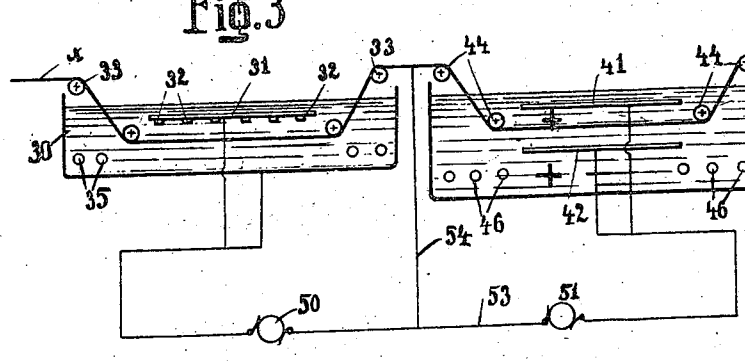

FELIX KIRSCHNER
INVENTOR
By Otto Kirschner
his Atty.

Patented Dec. 2, 1924. 1,517,910

UNITED STATES PATENT OFFICE.

FELIX KIRSCHNER, OF VIENNA, AUSTRIA.

PLANT FOR ELECTROPLATING METAL.

Original application filed August 24, 1921, Serial No. 494,870. Divided and this application filed November 21, 1922. Serial No. 602,443.

To all whom it may concern:

Be it known that I, FELIX KIRSCHNER, subject of Switzerland, residing at Vienna, XVII., Hernalsergurtel 1, Austria, have invented certain new and useful Improvements in Plants for Electroplating Metal, of which the following is a specification.

This invention relates to a plant for coating metal, more particularly iron, with a more readily fusible metal such as tin, by means of a process consisting in cleaning, pickling and electroplating the metal, applying thereto and uniformly distributing thereon an adhesion flux, fusing the said coating onto the metal, then cooling it and removing therefrom any residues of the adhesion flux and finally cleaning and drying the metal as more fully described in the application of August 24th, 1921, Ser. No. 494,870 of which the present application is a division.

The object of this invention is to provide a plant designed to perform the operations above mentioned in a commercially satisfactory manner with the minimum of expenditure of material, time and labour.

With this object in view this invention consists of a plant comprising apparatus for performing the various operations preferably in succession and continuously in proper order under the most favorable conditions.

In the drawing, by way of example a plant embodying this invention is illustrated, which is more particularly designed for manufacturing tin plate by the process above referred to.

Fig. 1 is a diagrammatical view of the plant, Figs. 2 and 3 show details.

x indicates the material to be coated which in the example chosen consists of lengths of sheet iron. It may consist either of an endless band or of lengths connected by joints x' so as to form an endless band. As shown in the drawing, this band is led from a supply table 1 or a roller or the like, and is continuously fed by suitable feeding devices to the various parts of the plants in succession and, when finished, wound upon a winding drum or roller 20. The apparatus comprising the plant is arranged as follows:

2 is a pair or set of pressure rollers serving partly for feeding the band forward and partly for pressing out or smoothing down the joints x' between the consecutive lengths or sheets. 3 is an apparatus of a construction adapted for removing any fatty matter from the band, which may be kept filled for instance with milk or lime or lime water in the well known manner. 4 is a rinsing apparatus which by the action of water frees the band from any impurities remaining after the removal of fatty matter. 5 is an electric pickling apparatus in which in well known manner the band is thoroughly pickled by means of a pickling bath through which an electric current is passed. In order to make the band suitable for electroplating, there may be interposed between the pickling bath 5 and the electroplating cell 6 further apparatus (not shown in the drawings) well known for removing fatty matter, for rinsing brushing and again rinsing the band x, by which means the cleaning of the band is completed. 6 is the electroplating bath. The details of the electric pickling apparatus and of the electroplating bath and more particularly the arrangement of their circuits and method of coupling up are hereinafter described. 7 is an elastic pair of rollers by which the excess of liquid adhering to the band at this stage of the process is removed. 8, 8 is an atomizer, operated by air under pressure, by which an adhesion flux is sprayed upon the top and underside of the band in a finely subdivided state. 9 is a set of two pairs of rollers which are preferably covered with fabric. These rollers revolve slowly in the direction indicated in Fig. 1 and have for their object to distribute evenly the layer of adhesion flux sprayed upon the band and to remove any local excess of the adhesion flux. 10, 11, 12 are guide rollers by which the band is caused to run obliquely first upwards and then downwards in a part of its continuous movement for a purpose to be hereinafter explained. 13 is a fusing or hot air furnace the construction of which is fully described below, which serves for fusing on the electrolytically deposited coating metal. In this furnace accordingly the coating metal deposited on the metal strip by electrolysis is caused to fuse in the presence of the adhesion flux, which in the meanwhile has dried on the band. Any other fusing apparatus, for instance an electric one, may be substituted for the furnace

13. 14 is a bath of water or aqueous solutions, in which the band is thoroughly treated, preferably while still warm, for a purpose to be explained below and simultaneously cooled. 15 is a cleaning apparatus the construction of which is hereinafter described. 16 is a rinsing apparatus of well known form. 17 are elastic rollers for removing water. 18 is a drying oven provided with a heating device 18′ and a draught pipe 18″ in which drying discs 18‴ of some suitable fabric may be provided. 19 is a wiping or drying device, by which the lustre of the coating fused on to the ground metal is completed, the last impurities still remaining on the bright coating being removed by this device. 20 is a roller on which the band may be wound; for this may be substituted an apparatus for cutting the finished band into sheets.

The details of construction of the various apparatus and the arrangement of the electric circuit are the following:

The electric pickling apparatus consists of a lead trough 30 with a lead plate 31 disposed therein and supported by wooden bars 32 running across the trough. To facilitate increasing or reducing the pickling action at will it is preferable to make the parts 30, 31 serving as cathodes adjustable. The same object may be attained by making the feed and guide rollers 33 for the band to be treated in the pickling trough vertically adjustable relatively to the band.

The band x runs between the lead plate 31 and the bottom of the trough 30 over rollers 33. The trough is filled with any known pickling agent such for instance as dilute (10%) hydrochloric or sulphuric acid. For heating the pickling liquid the trough may be provided with a suitable heating device 35.

The electroplating cell consists of a trough 40 having suspended in it electrode plates 41, 42 which in the example selected consist of tin. The band runs between the electrodes over rollers 44. The trough is kept filled with any known or suitable stanniferous electrolyte suitable for tinning purposes, and of basic neutral or acid character. For heating the electrolyte suitable heating devices 46 may be provided in the trough. As shown in Figs. 1 and 2 the electric pickling apparatus 5 and the electroplating apparatus 6 are supplied with current from a source of electricity 47 common to both of them, the circuit arrangements being such that the band x while passing through the pickling bath forms the positive electrode and while passing through the electro-plating bath forms the negative electrode.

This result may be arrived at in different ways, for example in the arrangement shown in Fig. 2 by connecting the trough 30 and the anode 31 to the negative terminal of the source of electricity 47 and the tin electrodes 41, 41 of the electro-plating bath to the positive terminal of the source of electricity 47, or in the arrangement shown in Fig. 3 by connecting the trough 30 and the anode 31 of the electric pickling apparatus to the negative terminal of a source of electricity 50 and the tin electrodes of the electroplating apparatus to the positive terminal of an other source of electricity 51, both sources of electricity being connected with each other (in series) by a wire 53 as shown in Fig. 3, which makes electrical connection with the band x by a wire 54 between the pickling trough and the electro-plating bath.

Both arrangements offer the advantage that at all times an exact relation between the amount of metal deposited in the electroplating bath and the energy expended in the electric pickling apparatus is maintained automatically. Thereby it is made possible to control the electrical or electrolytic action in the pickling apparatus 5 and in the electro-plating bath 6 simultaneously and to bring it into proper relation with the speed with which the band is fed through the plant.

The atomizer 8, 8 consists of an injector nozzle of any suitable construction, by means of which liquids containing substances capable of acting as fluxes may be finely sprayed onto the band.

For the atomizer there may be substituted any device which allows the band to be supplied with adhesion flux and the quantity and the distribution thereof to be nicely controlled. Applying the adhesion flux in the form of a fine powder by brushing and subsequently uniformly distributing the same by the ruffing or wiping devices 9 has been found by experiment to be particularly advantageous.

The fusing or hot air furnace 13 consists of a chamber provided with a window 60 for inspection purposes and there are slits 61, 62 provided in the sides of the furnace which fit closely to the band x as it passes through. The furnace has a number of heating devices 63 one of which is arranged as near as possible to the exit opening 62 for the band. The other heating devices can be distributed separately or in groups about the furnace as required to suit the character of the metal passing through the furnace and the metal coating that has been applied thereto. At the top of the furnace is provided a draw-off pipe 64. In the furnace the galvanically deposited coating on the metal is fused by the hot air. In the arrangement shown in the drawing the bath 14 is arranged close up to the heating furnace in order to enable the water treatment of the metal to follow immediately upon the fusing process. The effect of this is in the construction shown that the metal as it

passes out of the furnace is immediately cooled on leaving the furnace and is freed of any residue left from the adhesion flux. The bath consists of a pan to which cold liquid (for example water acidulated with hydrochloric acid) is led by a pipe 70; the overflowing of the bath 14, is prevented by the provision of one or more overflow pipes 71.

The cleansing device comprises a casing 15 to which are supplied through a pipe 15′ weak basic solutions for example chalk and water or mixtures of chalk and water and lime water. The solution flows off by the pipe 15″. Within the casing are arranged discs 15‴ composed of textile material.

The object of the cleansing apparatus is only to free the metal from any residue from the adhesion flux which may be still adhering thereto and to ensure that it be dried by quite simple drying means such as the apparatus 18.

I claim:

1. A plant for electroplating metal comprising an electroplating cell, means for applying an adhesion flux to the electrolytically deposited coating, means for fusing said coating on to the metal by aid of the adhesion flux and means enabling the molten coating to cool while setting.

2. In a plant for electroplating metal, the combination with the elements claimed in claim 1 of means for finely distributing the adhesion flux on to the surface of the electrolytically deposited coating.

3. A plant for electroplating metal comprising an electroplating cell means for applying an adhesion flux to the electrolytically deposited coating, means for fusing said coating on to the metal by aid of the adhesion flux and a water bath enabling the molten coating to cool while setting.

4. In a plant for electroplating metal the combination with the elements claimed in claim 3, of means for conducting cooling fluid to and from the water bath.

5. A plant for electroplating metal comprising an electroplating cell, means for applying an adhesion flux to the electrolytically deposited coating means for fusing said coating on to the metal by aid of the adhesion flux and a water bath so closely juxtaposed to the fusing means that the coating after having been molten is quickly changed from the molten condition to the set condition.

6. In a plant for electroplating metal the combination with the elements claimed in claim 3, of means for guiding the metal into the water cooling bath in inclined relation to the level of the water bath.

7. A plant for electroplating metal comprising an electroplating cell, atomizing means for applying an adhesion flux in finely divided condition on to the surface of the electrolytically deposited coating, means for fusing said coating on to the metal and cooling means enabling the molten coating to cool while setting.

FELIX KIRSCHNER.

Witnesses:
CARL NOUDENBURY,
ALEXANDER SONN.