Jan. 3, 1928.

1,655,214

H. BAETZ

AIR HEATER

Filed March 4, 1926

Fig. 1.

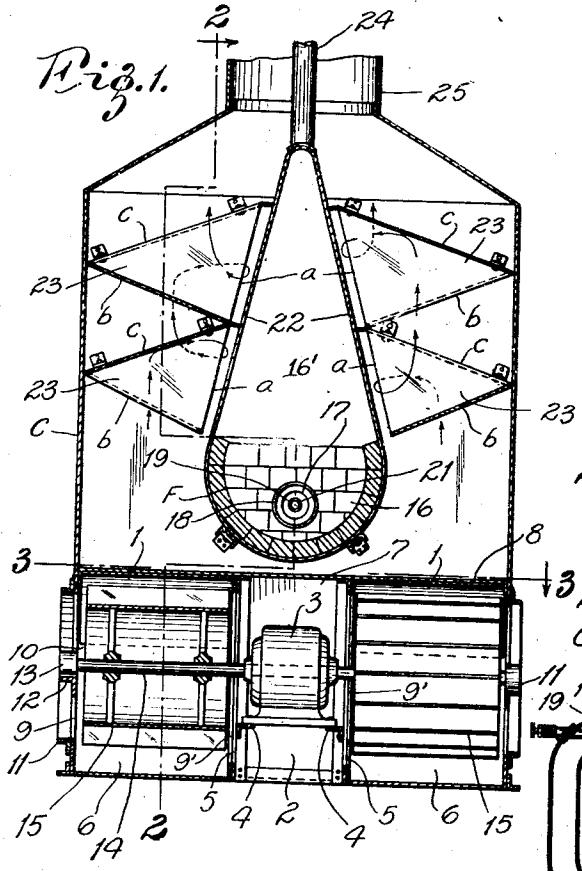

Fig. 2.

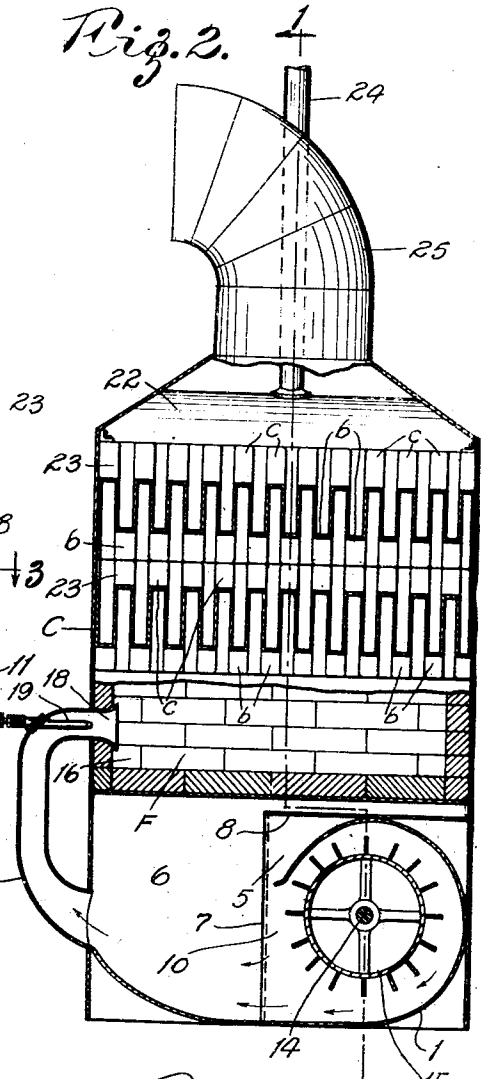

Fig. 3.

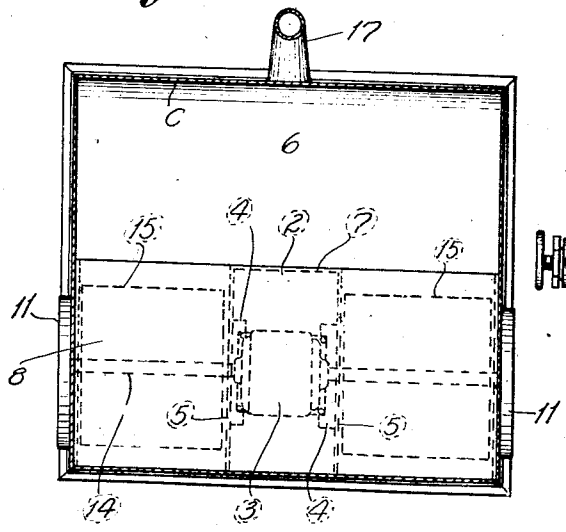

Fig. 4.

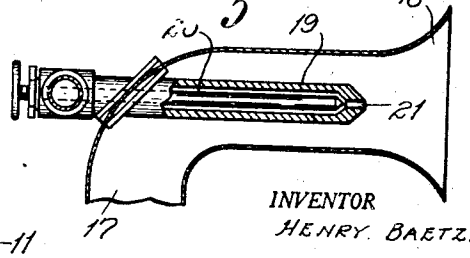

INVENTOR
HENRY BAETZ.

BY Harry A. Baetz

ATTORNEY

Patented Jan. 3, 1928. 1,655,214

UNITED STATES PATENT OFFICE.

HENRY BAETZ, OF ST. LOUIS, MISSOURI.

AIR HEATER.

Application filed March 4, 1926. Serial No. 92,221.

My invention has relation to improvements in air heating apparatus and consists in the novel features of construction more fully set forth in the specification and pointed out in the claims.

The present invention is a modification of that shown in my co-pending application, Serial No. 688,497 filed January 25, 1924, differing from that in respect of the heating element. In the application referred to, the heating element is in the form of a steam heated radiator while in the present application the heating element consists of a small furnace in which the firebox is extended to form a heat drum from the walls of which the heat is radiated.

The object of the invention is to provide a self contained or direct fired heater, that is, one in which the heat is generated as well as being radiated therefrom. Further advantages will be better apparent from a detailed description of the invention in connection with the accompanying drawing in which:

Fig. 1 is a vertical longitudinal section taken on the line 1—1 of Fig. 2; Fig. 2 is a vertical longitudinal section taken on the line 2—2 of Fig. 1; Fig. 3 is a horizontal cross section taken on the line 3—3 of Fig. 1; and Fig. 4 is an enlarged sectional detail of the oil furnace and air injection nozzle.

Referring to the drawings, C represents the heater casing in the lower part of which are formed two fan scrolls 1 between which is a compartment 2 to receive a motor 3 mounted on angles 4, 4 secured to the inner walls 5, 5 of fan scrolls or housings 1. Between the compartment 2 and air chamber 6 of the casing is a wall 7, and a wall 8 extends from side to side of the casing over the fan housings and closes the compartment 2 at the top. The fan housings are each provided with inlet openings 9, 9′ and with an outlet opening 10, the latter being in communication with the air chamber 6 of the casing. A ring 11 is disposed around each opening 9 and is provided with a rib 12 for supporting a bearing 13 for a shaft 14 on which is fixed a fan 15. There is but one shaft 14 for both fans 15, said fans consequently, being driven in unison and operating as but a single fan. A furnace F is disposed within the casing C and extends from one side thereof to the other in a plane transversely to the motor shaft 14, said furnace being substantially triangular in shape, the firebox 16 being semicircular and lined with refractory material and provided with a heat drum 16′ for the products of combustion. A tube 17 leads from the air chamber 6 of the casing to the firebox 16, said tube terminating in a nozzle 18 within which is an oil injection or spray nozzle 19 of any conventional type. In the present instance the oil nozzle is shown traversing the wall of the air nozzle 18. However, this specific construction is for purposes of illustration only. The nozzle 19 as constructed, is provided with an inlet valve 20 for adjusting the oil spray from the discharge port 21. A flue 24 is provided for the products of combustion from the furnace F and an air outlet pipe 25 is provided for the heated air.

Mounted within the casing C on each side of the side walls 22, 22 of the furnace F and in close proximity thereto, are two rows of air conductors 23, said conductors being in the shape of hollow prisms having their sides *a* which are adjacent to the walls 22 of the furnace open and their other two sides alternately open and closed, that is, assuming (Fig. 1) that the lower sides *b* are open and that the upper sides *c* are closed, then the lower sides of the next adjacent conductors will be closed and upper sides open. The construction and arrangement of the conductors 23 is identical with that of the conductors in my co-pending application above referred to and is not claimed per se in this application.

The operation of my invention will now be described as follows:

The motor 3 is first started and the fans 15 driven thereby in the direction of the arrow (Fig. 2), said fans driving a body of air into the air chamber 6 and upwardly through the casing C. The oil injection nozzle is now opened so as to admit a spray of oil together with the air that is conducted upwardly through the tube 17 into the combustion chamber 16 of the furnace F. On igniting the oil spray from the nozzle 19, an intense heat is created within the fire box 16 of the furnace from the burning fuel particles, which heat is carried upwardly into the drum 16′ by the products of combustion on their way to the flue 24, the walls 22 of the heat drum becoming intensely hot and radiating heat from the outer surfaces thereof. As the air moves upwardly through the casing C, it will pass on each side of the furnace F and encounter

the first row of deflectors 23. These deflectors will divide the moving body of air into a plurality of streams and conduct said streams against the wall 22 of the heat drum from which the streams of any given conductor will be forced into the next adjacent conductors passing out through the open sides *b* of the next adjacent conductors and into the open sides *b* of the conductors of the next row which conductors will again cause the air to be deflected against the wall 22 after which they will pass into the conductors adjacent thereto and then discharge into the upper part of the casing 1 and out through the conduit 25. Thus the air is caused to repeatedly impinge upon the walls 22 of the furnace drum at the same time progressing toward the outlet side of casing C. The air is thus forced to take up a maximum of heat units as it passes through the casing and on discharging therefrom is in a well heated condition. By injecting the fuel into the air nozzle 18 so that the fuel and air will pass into the fire box together, an intimate mixture of fuel and air is effected resulting in complete combustion of the fuel.

If desired, the spray nozzle 19 may be replaced by a gas injector or any other type of apparatus for the purpose of spraying fuel into the fire box 16 in a fluent condition.

Having described my invention, I claim:

1. An air heating device comprising a casing, a furnace having a fire box and a heat drum in communication therewith, said casing having an air-chamber adjacent to the furnace, an air-moving device arranged to discharge air into said chamber, a tube leading from the air-chamber to the fire box, and a plurality of conductors arranged in the casing to conduct the main body of air through the casing in streams, said conductors having deflecting elements for causing the air to impinge on the heat drum.

2. An air heating device comprising a suitable casing having an air inlet and an air outlet, a furnace within said casing having a fire box and a heat drum in communication therewith, said heat drum having a radiator surface, an air chamber within the casing adjacent to the furnace, an air moving device arranged to discharge air into said chamber, means for bypassing some of the air from the air chamber to the fire box, and deflectors traversing the space between the surface of the drum and the casing for intercepting the air on its passage through the casing and directing it against the drum radiator surface.

In testimony whereof I hereunto affix my signature.

HENRY BAETZ.