March 10, 1931. J. J. MUCHER 1,795,961

RESISTANCE UNIT

Filed Nov. 22, 1928 2 Sheets-Sheet 1

Fig. 1.

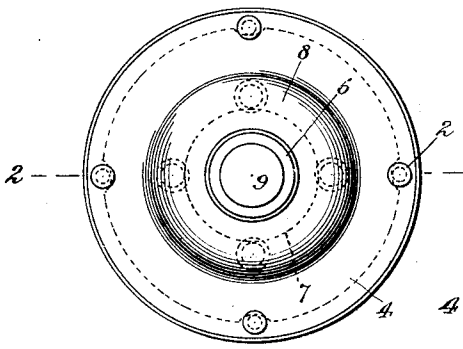

Fig. 2.

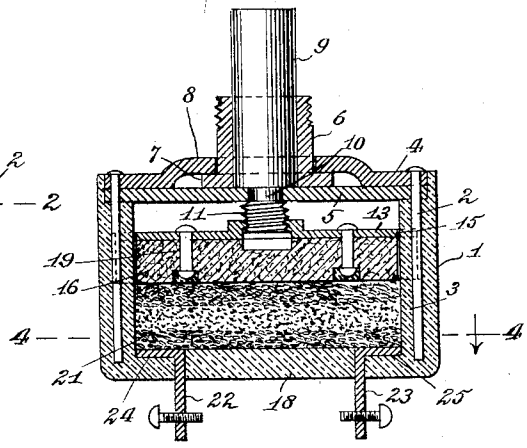

Fig. 3.

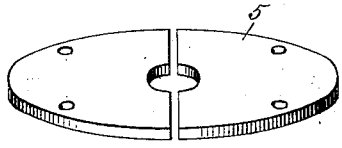

Fig. 5.

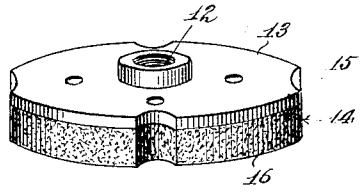

Fig. 4.

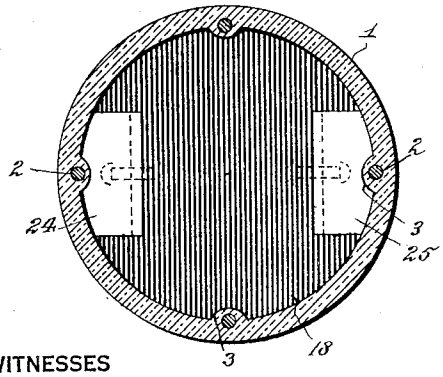

Fig. 6.

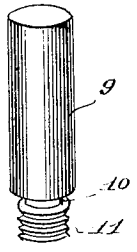

WITNESSES

William P. Goebel.

A. L. Kitchin.

INVENTOR

John J. Mucher

BY Munn & Co.

ATTORNEY

March 10, 1931. J. J. MUCHER 1,795,961

RESISTANCE UNIT

Filed Nov. 22, 1928 2 Sheets-Sheet 2

Fig. 9.

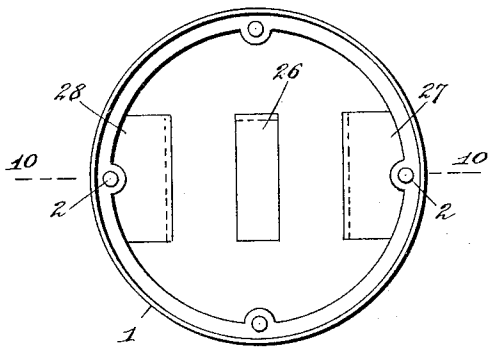

Fig. 11.

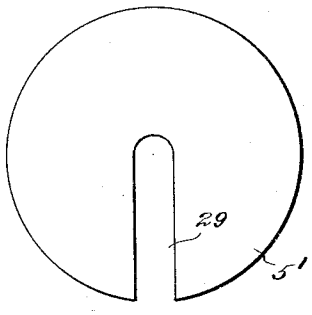

Fig. 10.

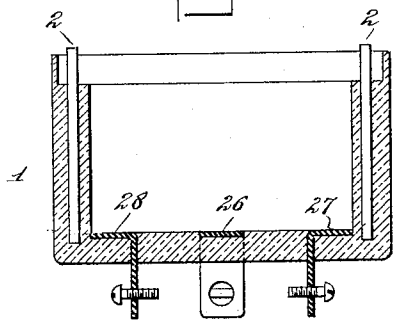

Fig. 12.

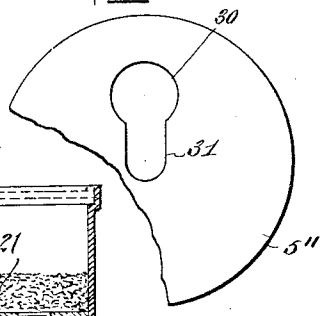

Fig. 8.

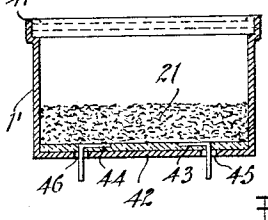

Fig. 13.

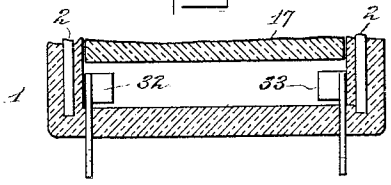

Fig. 14.

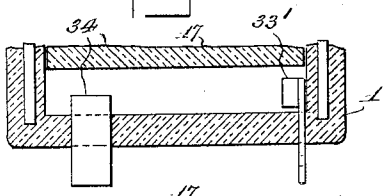

Fig. 15.

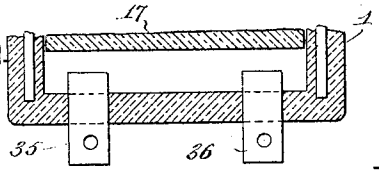

Fig. 16.

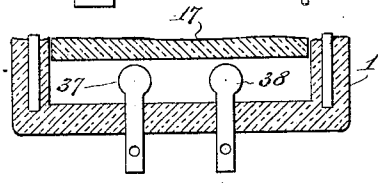

Fig. 7.

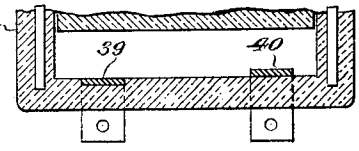

WITNESSES

William A. Goebel

A. L. Kitchin

INVENTOR

John J. Mucher

BY Munn & Co

ATTORNEY

Patented Mar. 10, 1931

1,795,961

UNITED STATES PATENT OFFICE

JOHN J. MUCHER, OF BROOKLYN, NEW YORK

RESISTANCE UNIT

Application filed November 22, 1928. Serial No. 321,114.

This invention relates to resistance units, and has for an object to provide an improved construction wherein an extremely sensitive and accurate instrument is produced, and one which avoids extraneous influences caused by moving contacts.

Another object of the invention is to provide a resistance unit wherein the electrodes or terminals are all stationary and where a compressible resistance medium is used to connect the terminals, the arrangement being such that the resistance medium may have its density varied at will to vary the resistance provided between the respective terminals.

Another object of the invention is to provide a resistance unit wherein the electrodes or terminals are surrounded by a resistance medium or arranged in contact therewith with parts associated with the resistance medium, whereby the same may have its density varied without producing noises in a telephone or radio circuit when the unit is used on such a circuit.

An additional object is to provide a resistance unit for producing a desired resistance in an electric circuit with the parts so arranged that the terminals and resistance medium are all substantially stationary but subject to a compressor for varying the action of the resistance medium, which action takes place without producing any movement on the terminals but varying the resistance medium in connection with the terminals.

In the accompanying drawings,—

Figure 1 is a top plan view of the resistance unit disclosing an embodiment of the invention;

Figure 2 is a sectional view through Figure 1 on the line 2—2;

Figure 3 is a perspective view of a shaft-retaining disk embodying certain features of the invention;

Figure 4 is a sectional view through Figure 2 on the line 4—4;

Figure 5 is a perspective view of the compresser removed, the holding rivets being omitted;

Figure 6 is a perspective view of an adjusting shaft embodying certain features of the invention;

Figure 7 is a fragmentary sectional view showing the lower part of the casing, but showing an additional, modified arrangement of electrodes;

Figure 8 is a sectional view showing a modified form of the invention, wherein the casing is of metal;

Figure 9 is a top plan view of the resistance unit casing shown in Figure 2, but with a modified form of terminal or electrode;

Figure 10 is a sectional view through Figure 9 on the line 10—10;

Figure 11 is a plan view of a modified form of shaft-retaining disk;

Figure 12 is a plan view of a further modified form of shaft-retaining disk;

Figure 13 is a fragmentary sectional view showing the lower part of the casing illustrated in Figure 10 but with a modified form of electrode or terminal;

Figure 14 is a view similar to Figure 13 but showing a further modified form of electrodes;

Figure 15 is a view similar to Figure 14 disclosing a different arrangement of electrodes;

Figure 16 is a view similar to Figure 15 but showing a further arrangement and modification of electrodes.

Referring to the accompanying drawings by numerals, 1 indicates a casing or container formed preferably of insulating material, as for instance, porcelain, phenol condensation product or other suitable material which will withstand the desired usage. If desired, this casing could be made of metal or other material, but if made of metal an insulated lining is necessary and certain parts must be insulated. By providing the casing 1 of insulation a simple, strong construction is presented and the casing acts both in the capacity of a container and an insulating structure. A number of anchoring bars or rivets 2 are provided in the walls of the casing, the walls being thickened at 3 to accommodate these anchoring bars. As illustrated in Figure 2, the rivets or anchoring bars 2 extend through the cover 4 and through the shaft-retaining disk 5, after which they are upset or riveted, as clearly shown in Figure 2. Extending

through the cover 4 is a sleeve 6 having a threaded end, whereby the device may be connected to a support, said sleeve having an enlarged flange 7 arranged beneath the raised part 8 of cover 4. This sleeve provides a bearing for the adjusting shaft 9, said shaft having a smooth portion at the outer end for receiving a knob, if desired, an annular groove 10 for receiving certain parts of the disk 5 and a threaded portion or section 11 coacting with threads 12 in the plate 13 of the compresser 14. The compresser 14 is formed with a top plate 13, as shown in Figure 5, said plate having suitable notches 15 for accommodating the thickened portions or beads 3. This arrangement is carried out through the fibrous packing disk 16, whereby the compresser cannot rotate but may move toward and from the bottom 18. The disk 16 may be made from asbestos or other desired fibre and is tightly clamped to the plate 13 by suitable rivets 19, said rivets having one end embedded in the fibre disk 16, the rivets being positioned to extend through the plate 13. The embedded ends of the rivets are preferably covered by a suitable dielectric cement. The plate 13 is preferably of appreciable thickness so as to stand whatever pressure may be exerted thereon for compressing the resistance medium 21 which may be any granular resistance substance, as for instance, a mixture of mica and graphite. This particular mixture is desirable because it is rather resilient and yet provides a conducting path for electricity, the degree of conductivity being in proportion to the density of the medium. This density is varied by moving the compresser 14 toward or from bottom 18. Granular matter of this kind or other desired kinds will, when left alone for an appreciable time, assume substantially the same quality or degree of resistance throughout, but when the compresser 14 is moved away from the bottom 18 the portion or layer of resistance medium 21 further from the bottom 18 will expand first and gradually later the central portion will expand and finally the layer nearest the bottom 18 will expand. For this reason and for others including the desirability of having stationary electrodes the construction shown in Figure 2 has been provided, whereby the terminals or electrodes 22 and 23 extend through bottom 18 and are turned over for forming contact plates 24 and 25 embedded in the upper surface of bottom 18 but always in contact with the resistance medium 21. As the compresser 14 moves away from bottom 18 or toward bottom 18 no change in the contact with members 24 and 25 will occur, as these members continually contact with the resistance medium so that there will be no loose motion therebetween. It will thus be seen that a device is provided wherein terminals are used continually in contact with the resistance medium and the movement in adjusting or varying the resistance will not disturb the contact of the electrodes, nor will there be any loose motion between the parts. This is very desirable where the device is used in a telephone or radio circuit, as any loose motion or variation in resistance may produce an undesired sound or other condition in the circuit. By changing the pressure on the resistance medium the density is varied, and consequently, the resistance is varied. This is done without changing the distance between the electrodes and without providing any movable or rubbing contacts in the circuit. In addition to changing or varying the resistance by changing the density of the medium 21, the resistance may be varied or controlled by varying the distance of the electrodes and by varying the substance or fineness of the resistance material.

The arrangement of stationary electrodes or contacts and a connecting resistance which may have its action or resisting power varied will lend itself to a proposition of constructing a device which may use two electrodes, three electrodes or even more.

This principle also permits the electrodes to be variously positioned and yet secure substantially indentical results. As shown in Figures 9 and 10 an arrangement has been disclosed which brings out this idea and in these figures three contacts have been shown, although if desired, more contacts could be shown or the contacts could be differently arranged, as for instance, instead of the central contact 26 being midway between the contacts 27 and 28 it could be arranged nearer one contact than the other. This arrangement permits a circuit to be used including only contacts 27 and 28 and at the same time a circuit including contacts 28 and 26 or a circuit including contacts 26 and 27.

In Figures 11 and 12 modified forms of shaft-retaining plates are disclosed, Figure 12 showing a plate 5′ having a slot 29, whereby it may accommodate the neck 10′ in shaft 9. Figure 12 shows a disk or plate 5″ having a comparatively large opening 30 merging into a slot 31 of a size to nicely accommodate neck 10′. Opening or aperture 30 must, of course, be large enough to accommodate the upper part of the shaft 9, so that the shaft could be fed therethrough and then moved laterally so that the neck 10′ will fit in the slot 31.

In Figures 7 and 13 to 16 inclusive several modified forms of terminals or electrodes have been presented and also modified arrangements, these structures illustrating how the device may be slightly varied to adapt itself to varying conditions. In Figure 13 the electrodes 32 and 33 extend into the medium 21 at the edges thereof and substantially centrally thereof. These electrodes are spaced from the bottom of the casing, and

consequently, are surrounded on all sides with the medium 21. In Figure 14 a terminal 33′ is provided similar to terminal 33 of Figure 13 and coacting with this terminal is an electrode or terminal 34 merely extending upwardly to substantially the center of the medium 21.

Figure 15 shows a slightly different arrangement of terminals 35 and 36, wherein the terminals project to a substantially central point within the medium 21 or the space to be occupied by this medium.

Figure 16 shows terminals 37 and 38 arranged substantially centrally of the bottom of the casing with rounded ends arranged substantially centrally of the space to be occupied by the resistance medium 21.

Figure 7 shows a further modified arrangement wherein the electrode or terminal 39 is embedded in the bottom of the casing and electrode 40 is resting on the surface of the bottom. It will thus be seen that in all forms of the invention the contacts or terminals are stationary and the resistance medium is substantially stationary but subject to compression, whereby the density may be varied, and consequently, the resisting action varied. In placing the resistance medium in the casing it may be placed loosely in the proper place and then compressed or it may be precompressed and then placed in the container. In providing the resistance material in either of the manners described, a resistance body is presented which is acted on by the compresser, as heretofore set forth

In Figure 8 will be seen a further modified form of the invention, wherein there is provided a casing 1′ formed of metal and preferably formed of comparatively thin metal pressed into the desired shape. The upper part is provided with a flange 41 which may be turned over to secure the members 4 and 5 in place, if desired. The metal casing is feasible by reason of the fact that there is provided an insulating plate 42 in the bottom of the casing into which the terminals 43 and 44 are embedded. The terminals extend through suitable apertures 45 and 46 in the bottom of the casing. The resistance medium 21 is identical with that shown in Figure 2 and functions in the same manner. However, in arranging the terminals 43 and 44 they are positioned so that the distance between that part of the terminals in contact with the medium 21 will be less than twice the distance of the terminals from the side walls of casing 1. In this way the path of resistance will be less between the terminals than it will be between the terminals and the casing. By arranging the terminals in this manner the current will always pass through the medium 21 and consequently proper adjustment may be secured, as desired.

What I claim is:—

A resistance unit comprising a tubular casing of insulating material formed with a bottom, the walls of said casing having thickened portions at spaced intervals extending inwardly, an anchor embedded in each of said thickened portions and extending therefrom at one point, a cover plate held in position by said anchors, a pair of electrodes carried by said bottom, a granular resistance medium positioned in the casing and connecting said electrodes, a compressor positioned in said casing, said compressor having a plurality of notches in its periphery for accommodating said thickened portions whereby said compressor is held against independent rotation, and manually actuated screw means using said cover plate as an abutment, said screw means being threaded into said compressor for moving the same in a direction perpendicular to the plane of said electrodes for varying the density of said granular matter.

Signed at New York, in the county of New York and State of New York, this 19th day of November A. D. 1928.

JOHN J. MUCHER.