July 29, 1930. F. G. BROTZ 1,771,524

DISHWASHER

Filed Aug. 8, 1927 2 Sheets-Sheet 1

FIG. 1

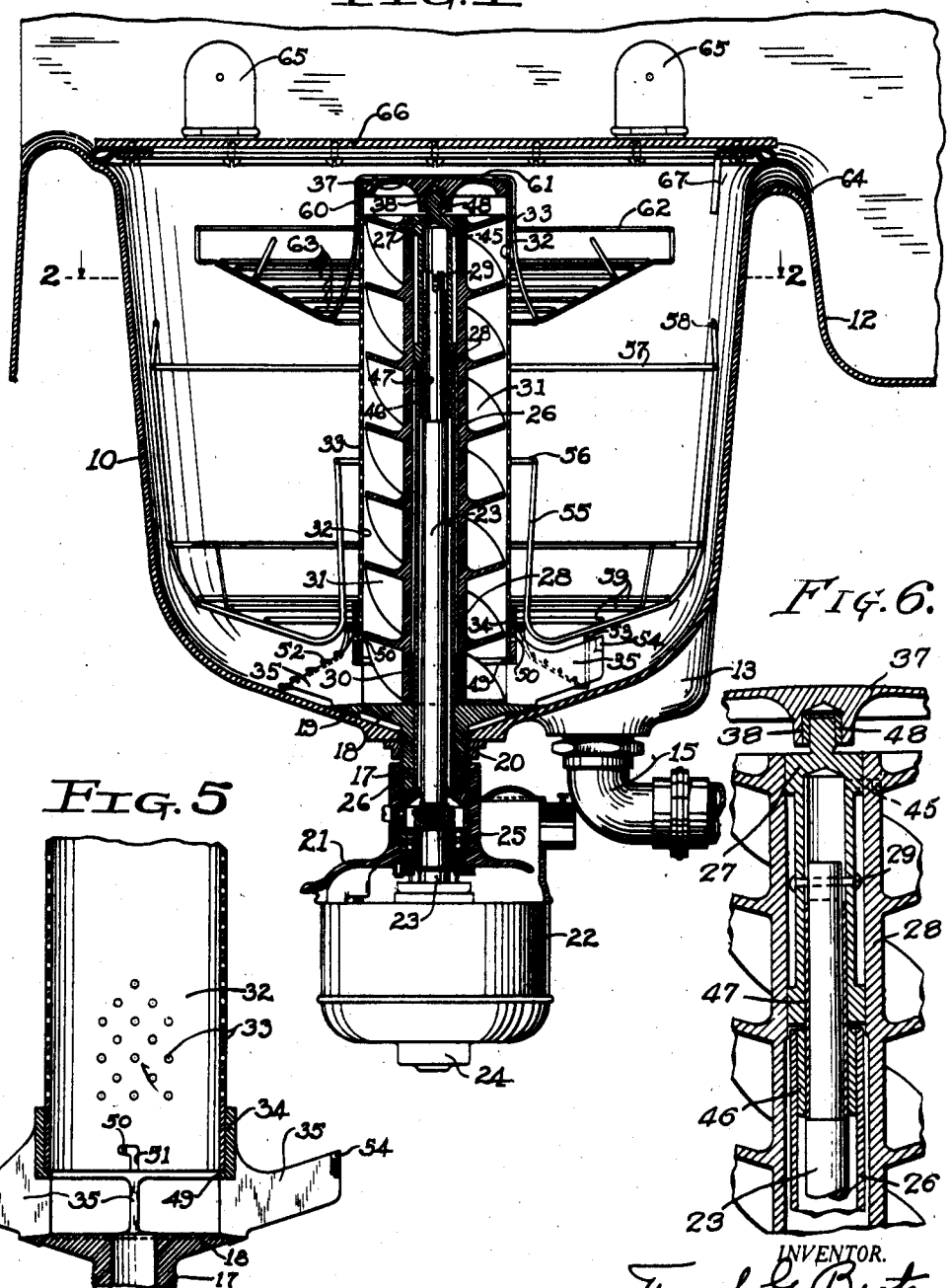

FIG. 6.

FIG. 5

WITNESSES

Irving J. Rose.

M. E. Downey

INVENTOR.

Frank G. Brotz

By R. S. C. Caldwell

ATTORNEY.

July 29, 1930. F. G. BROTZ 1,771,524

DISHWASHER

Filed Aug. 8, 1927 2 Sheets-Sheet 2

FIG. 2

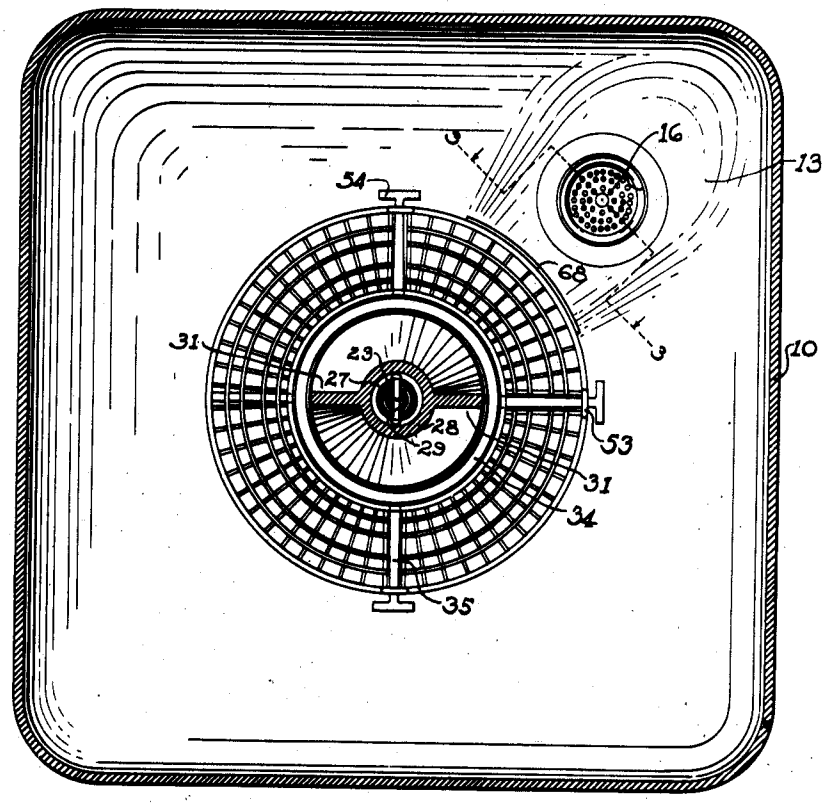

FIG. 3

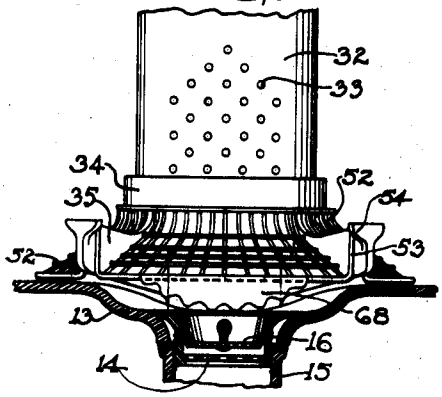

FIG. 4

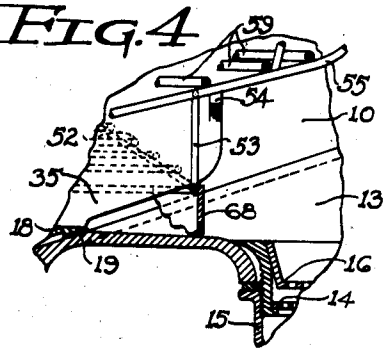

WITNESSES

Irving J. Rose.

M. E. Downey

INVENTOR.

Frank G. Brotz

BY

R. S. C. Caldwell

ATTORNEY.

Patented July 29, 1930 1,771,524

UNITED STATES PATENT OFFICE

FRANK G. BROTZ, OF KOHLER, WISCONSIN, ASSIGNOR TO KOHLER COMPANY, OF KOHLER, WISCONSIN, A CORPORATION OF WISCONSIN

DISHWASHER

Application filed August 8, 1927. Serial No. 211,526.

This invention relates to dishwashers of the type in which a small quantity of water is rapidly circulated and forcibly ejected upon the dishes to remove the dirt by impact.

The invention has particular reference to dishwashers of the stationary type and especially to those embodied in or permanently combined with a sink structure, but features of the invention are adaptable for various dishwashers and machines of a similar character where rapid circulation and forceful ejectment of a fluid are desirable.

The invention has for its object to reduce to a minimum the quantity of water employed and to evenly distribute numerous jets of water from an upstanding column or tower so that the entire space surrounding the column will be included in the effective range and all of the dishes contained in the receptacle will be thoroughly cleaned by the impact and the flow of the water jets over their surface.

Another object of the invention is to provide a motor-driven worm or screw operating in a perforated cylinder with comparatively close fit so that the water will be elevated by the screw and subjected to considerable pressure from the screw to produce numerous forceful jets of water issuing from the cylinder in all directions and substantially throughout the length of the cylinder.

Another object of the invention is to facilitate the return of the water to the lower end of the cylinder by means of stationary blades for preventing eddy currents therein and at the same time constituting a support for the basket containing the dishes.

Another object of the invention is to provide for ready removal of the cylinder and screw for cleaning.

Another object of the invention is to improve upon details of construction of the dishwasher covered by my allowed application Serial No. 12,032, filed February 27, 1925 now Patent No. 1,651,083, granted November 29, 1927.

Referring to the accompanying drawings, in which like characters of reference indicate similar parts in different views,

Fig. 1 is a central vertical sectional view of a dishwasher constructed in accordance with this invention;

Fig. 2 is a sectional plan view thereof on the plane of line 2—2 of Fig. 1;

Fig. 3 is a sectional detail on the plane of line 3—3 of Fig. 2 showing the drain guard,

Fig. 4 is a sectional detail view of the drain guard;

Fig. 5 is a detail view of the bayonet connection for the cylinder or tower and Fig. 6 is a detail enlarged view of the shaft connection.

In these drawings, 10 indicates a container, which is preferably of enameled iron construction formed integral with a sink 12. As shown, it is of general square section with rounded corners, although the sectional shape may be whatever is desired. The bottom preferably slopes toward the center at a considerable pitch, which will facilitate the water circulation, though at one corner there is a depression 13 containing the usual strainer 14 and waste connection 15, but in addition there is provided a cup-shaped removable strainer 16 for facilitating the removal of solids.

At the center of the depressed bottom of the container 10 is a screw coupling 17 having a conical head 18 to fit the conical depression of the bottom and this coupling is clamped permanently in place with rubber or other gaskets 19 between the abutting surfaces by means of a clamping nut 20, much in the same manner as the drain outlet coupling is connected to a sink in usual practice. Threaded on the protruding end of the screw coupling 17 is a motor housing cover 21 and removably attached to it is a motor housing 22 containing an electric motor, the armature of which is mounted on a shaft 23, which has a step bearing 24 in the end of the motor housing and a bearing 25 in the motor housing cover.

The shaft 23 continues upwardly preferably as a single shaft, to near the level of the top of the container 10 and surrounding it is a stationary tube 26 tightly fitting in the screw coupling 17 and extending to above the maximum water level so that water cannot overflow therethrough. The end of the

shaft 23, which projects above the tube 26, has a slot and fits in a central opening of a drive plug 27, which is fixed in the upper end of the bore of a screw sleeve 28, the slot in the end of the shaft taking one or more key pins 29 which extend across said plug. The lower end of the screw sleeve has a bearing 30 around the tube 26.

In actual practice it is found desirable to make the screw of aluminum and consequently the driving plug connection between it and the shaft has been designed for that purpose. The plug is preferably of brass and is tightly fitted within the bore of the screw sleeve 28, where it is held in place by a screw 45. It is preferably of smaller diameter between its ends to reduce the weight and to afford space for the rivet heads of key pins 29. The upper end of the shaft 23 where it extends within the drive plug 27 and where it passes through a bearing bushing 46 within the upper end of the tube 26 is surrounded by a tight-fitting sleeve 47, said bushing and sleeve as well as the plug being preferably of brass.

A steep pitch blade 31, or a pair of such blades, as shown, extend the length of the screw sleeve and closely fit within a cylindrical casing or tower tube 32, which is provided with numerous perforations 33, through which the water is ejected by the screw. This casing 32 is preferably removably clamped within a ring 34 carried by radially arranged blades 35 of the head 18 of the screw coupling so that the lower end of the casing is spaced a sufficient distance from the head 18 to permit the returning water to enter the lower end of the casing.

At its upper end the cylindrical casing 32 is provided with a cover plate 37 carrying a bearing 38 provided with a stainless steel bushing 48 for the reduced upper end of the plug 27, thus giving another bearing for the shaft and assuring the centering of the shaft within the cylinder.

The screw coupling 17 with its conical head 18 and the radial blades 35 and the ring 34 are preferably formed of a single casting of aluminum and the ring 34 is provided with an inwardly extending flange 49 at its lower edge forming a seat upon which the end of the casing 32 rests. Pins 50 project inwardly from the ring 34 and are received in bayonet slots 51 in the edge of the casing 32, the direction of the bayonet slots being such that a tendency of the casing to turn with the screw serves to more firmly hold the pins in the ends of the bayonet slots to prevent the casing from coming loose. Thus as viewed from the top the screw turns in a clockwise direction and likewise the casing turns in a clockwise direction to engage the pins in the ends of the bayonet slots and the motion of the screw will not tend to disconnect the casing but will hold it firmer in its clamped engagement and against the flange 49.

The space between the ring 34 and the conical head 18 where the screw blades are exposed is guarded to prevent knives, forks and spoons which may fall from coming in contact with the screw blades and to prevent injury to the fingers. This is accomplished by a wire guard 52, which is of a general cone shape made up of inclined radial wires and concentric rings welded at their intersections and extending from the ring 34 to near the bottom of the container 10. The top ring and the bottom ring are not interrupted but the others are cut away to fit over three of the blades 35, while the fourth blade is cut away on an inclined to have the guard rest thereon without cutting the rings, as shown in Fig. 1. The bottom ring, though not cut for the three blades, is arched to form loops 53 to pass over and rest upon the three blades. To further guard against knives, forks or spoons being drawn into contact with the rapidly rotating screw, a guard plate 68 is welded to the bottom ring between two of the arches 53 and projects downwardly, its lower serrated edge being curved to approximately fit the curvature of the depression 13 leading to the drain. The guard is loosely supported on the blades and may be removed vertically for cleaning but on account of one of the blades 35 being cut away to receive it without the necessity for interrupting the rings, there is one position in which the guard will fit in place and consequently the guard plate 68 will of necessity be properly positioned to fit the depression 13.

The three blades that are not cut away and that are arched by the loops 53 have cross-pieces 54 on their ends to form supports for a wire basket to contain the dishes. This basket constitutes the subject-matter of a separate application and is therefore not shown in detail in the present drawings but consists of a number of radial wires 55 or wires arranged in radial planes about the axis of the machine and each extending from a central ring 56 downwardly and slightly inwardly and then bending outwardly and slightly upwardly and then upwardly and joined to a wire ring 57 provided with handles 58, the outwardly extending portions being connected by a series of concentric wire rings 59 and all wires are preferably welded together at their intersections. The dishes are arranged in the basket and the basket is removable but when in position rests upon and is supported by the blades 35 at some distance above the bottom of the container 10. As shown in Fig. 1 the radial wires 55 happen to rest directly on the loops 53 of the wire guard but a slight movement of the basket to either side will, as shown in Fig. 4, cause said radial wires 55 to rest on the cross-pieces 54 provided for that purpose and the basket being of a general rectangular shape corresponding with the rectangular shape of the container, it is in-

capable of turning far enough to avoid engagement with either the loops 53 or the cross-pieces 54.

An upper basket is supported on the upper end of the cylindrical casing or tower tube 32 and is for supporting glassware and silverware. This basket also constitutes the subject-matter of a separate application and for that reason is not shown in detail in the present drawings but consists of a number of radial wires 60 or wires arranged in radial planes about the axis of the machine and each extending from a central ring 61 downwardly curving outwardly and bending outwardly and slightly upwardly, and then bending upwardly to join with an outer square wire ring 62. A number of square wire rings 63 connect the radial wires 60 to form the inclined bottom of the basket and all wires are welded together at their intersections. The central ring 61 is of smaller diameter than the cover plate 37 and rests thereon, while the wires 60 embrace the upper end of the cylindrical casing 32 between them. This basket is also removable by merely lifting it from the container.

Near the upstanding back of the combined sink and dishwasher the wall which forms the partition between the dishwasher container 10 and the sink 12 is slightly depressed to form an overflow 64 between the two receptacles for permitting water to overflow from the sink into the container and attached to the back are hinges 65 carrying a rubber cushioned cover 66 for the container 10. The rubber cushion of the cover makes a tight sealing fit entirely around the container except at the overflow 64. The metal frame which secures the rubber cushion in place on the cover has a guard plate 67 projecting from it and extending downwardly in the region of the overflow 64 but spaced therefrom and this guard intercepts jets of water which may be directed toward the overflow opening.

In operation it is not necessary with the present invention to use great quantities of hot water, for the dishwasher is designed to operate with a minimum quantity of water, approximately one and a half gallons, or the capacity of an ordinary tea kettle, and the normal level of such quantity of water is approximately that of the top of ring 34. The dishes are arranged in the baskets and the motor is started. The motor running at a high speed causes the screw 31 to lift the water within the perforated casing and subject it to considerable pressure, forcing it out of the openings in all directions and for substantially the full length of the casing, the water issuing from such openings in forcible jets, reaching all exposed surfaces with such force as to thoroughly clean the dishes. The water returning to the bottom of the container is immediately taken up by the screw and again forced through the openings so that practically all of the water is in active operation all of the time. This permits of the operation being performed with a minimum quantity of water. The object of accomplishing the operation with a minimum quantity of water is to make it possible to use the water at or near the boiling temperature without the necessity for obtaining sufficient volume by adding water of lower temperature from the water supply as it is found that machines requiring more than the quantity of water that it is convenient to bring to boiling temperature will be operated inefficiently by the tempering of the water in this manner.

Inasmuch as the jets of water are ejected from the cylinder in all directions and at all elevations, all surfaces within the container are subjected thereto, making an efficient cleaning operation under all conditions. Upon completing the washing operation, the drain may be opened to draw off the water and the dishes may be removed by lifting the baskets. All solid matter will be found collected in the removable strainer cup 16, which may be removed and emptied. When it is desired to clean the parts, the conical wire guard may be removed giving access to the bottom of the container and the cylinder itself may be turned and withdrawn from its bayonet slot connection with the ring 34 and then the impeller screw 31 may be lifted off of the shaft. Thus all parts are easily detached and as easily assembled for further operation.

The presence of the permanently fitted pipe coupling with its attached tube 26 permits of the use of the motor beneath the container without danger of its being injured by water. The blades 35 direct the water to the forcing screw, so that there is no delay in the return of the water to the action of the screw and with the guard prevent anything reaching the screw that will interfere with its operation. These blades with their cross-pieces also serve to support the basket of dishes and to position the cylindrical casing with respect to the screw so that they may fit closely without actually contacting and thus give great efficiency to the lifting and forcible ejecting action of the screw. The bayonet slot connection with the cylindrical casing 32 is not only adapted for quick detachability but by reason of the direction of the bayonet slots being related to the direction of the turning of the screw such influence of the screw upon the casing tends to tighten the locking engagement and serves to prevent the disconnection of the casing during operation.

The closely arranged wires of the guard effectively prevent injury to the hands by contact with the lower end of the screw and together with the guard plate 68 insure against

knives, forks and spoons coming in contact with the screw even by way of the depression in the bottom of the container provided for the drain.

With the plug forming the bearings for the upper end of the screw a strong and substantial support is given both to the screw and casing, the long plug having the widely spaced enlarged portions at its ends fitting in the screw gives it rigidity and enables a close fit and an even balance that will permit the screw to rotate at high speed without vibration. This plug construction also affords a strong key formation permitting the shaft to drive the screw without lost motion or wear and enables the use of a screw of aluminum so as to reduce the weight and permit of a higher speed. The bearing for the upper end of the shaft permits the screw to be readily removed therefrom without sticking.

What I claim as new and desire to secure by Letters Patent is:

1. In a dishwashing machine, a container, a coupling member passing through the bottom of the container, a motor mounted on the coupling member beneath the container and having its motor shaft passed through the coupling member, a screw mounted on the motor shaft, radially extending blades on the coupling member within the container, a ring mounted on said blades above the bottom of the container, a perforated cylindrical casing detachably connected with said ring and surrounding the screw, and a guard surrounding the ring and extending between and fitting on the blades to shield the lower end of the screw.

2. In a dishwashing machine, a container, a coupling member passing through the bottom of the container, a motor mounted on the coupling member beneath the container and having its motor shaft passed through the coupling member, a screw mounted on the motor shaft, radially extending blades on the coupling member within the container, a ring mounted on said blades above the bottom of the container, a perforated cylindrical casing detachably connected with said ring and surrounding the screw, a drain outlet depression in the bottom of the container, a guard surrounding the lower end of the screw and extending between the blades, and a guard member carried by said guard fitting the depression in the bottom of the container.

3. In a dishwashing machine, a container, a coupling member passing through the bottom of the container, a motor mounted on the coupling member beneath the container and having its motor shaft passed through the coupling member, a screw mounted on the motor shaft, radially extending blades on the coupling member within the container, a ring mounted on said blades above the bottom of the container, a perforated cylindrical casing detachably connected with said ring and surrounding the screw, a drain outlet depression in the bottom of the container and a conical wire guard srurounding the ring and extending between the blades and supported thereon, said guard being cut away to fit over the blades but one of the blades being cut away to fit the guard, and a guard blade on said guard fitting the depression in the bottom of the container.

4. In a dishwashing machine, a container, ring mounted on said blades above the bottom of the container, a motor mounted on the coupling member beneath the container and having its motor shaft passed through the coupling member, a screw mounted on the motor shaft, radially extending blades on the coupling member within the container, a ring mounted on said blades above the bottom of the container, a perforated cylindrical casing detachably connected with said ring and surrounding the screw, cross-pieces on the ends of the blades forming rests, and a wire basket surrounding the casing and bearing on the rests.

5. In a dishwashing machine, a container, a coupling member passing through the bottom of the container, a motor mounted on the coupling member beneath the container and having its motor shaft passed through the coupling member, said motor shaft having a slot in the upper end thereof, a sleeve on the coupling member surrounding the motor shaft, a tubular screw surrounding the sleeve, an elongated plug having a reduced central portion and fitting at both of its ends in the tubular screw and secured thereto, a key pin extending across the plug and riveted thereto with its rivet heads contained in the space between the reduced portion of the plug and the tubular screw for detachably engaging the slot in the end of the motor shaft, and a perforated cylindrical casing surrounding the screw and forming a bearing for the plug.

6. In a dishwashing machine, a container, a coupling member passing through the bottom of the container, a motor mounted on the coupling member beneath the container and having its motor shaft passed through the coupling member, said motor shaft having a slot in the upper end thereof, a sleeve on the coupling member surrounding the motor shaft, a tubular screw surrounding the sleeve, an elongated plug having a reduced central portion with both ends tightly fitting within the tubular screw and secured thereto, a perforated cylindrical casing surrounding the screw and forming a bearing for the plug, a bearing bushing in the end of the sleeve, a bearing sleeve on the end of the motor shaft fitting in the bushing and also fitting in the plug, and key pins extending across the plug and riveted thereto with their rivet heads contained in the space between the reduced portion of the plug and the tubular screw

for detachably engaging the slot in the end of the motor shaft.

7. In a combined sink and dishwasher having a dishwasher container adjacent the sink body with a partition wall therebetween having a depression forming an overflow from one to the other, means within the dishwasher container for forcibly ejecting water throughout said container, a cover for the container having a tight fit with the edges thereof, and a downwardly extending guard plate on the cover in the dishwasher container and in front of the overflow depression for preventing the jets of water passing out therethrough.

In testimony whereof, I affix my signature.

FRANK G. BROTZ.

CERTIFICATE OF CORRECTION.

Patent No. 1,771,524. **Granted July 29, 1930, to**

FRANK G BROTZ.

It is hereby certified that error appears in the printed specification of the above numbered patent requiring correction as follows: Page 2, line 80, for the word "inclined" read incline; page 4, line 76, claim 4, strike out "ring mounted on said blades above" and insert a coupling member passing through; and that the said Letters Patent should be read with these corrections therein that the same may conform to the record of the case in the Patent Office.

Signed and sealed this 21st day of October, A. D. 1930.

M. J. Moore,
Acting Commissioner of Patents.

(Seal)