June 20, 1944. G. G. LIGHT 2,351,621

PRINTING TELEGRAPH EXCHANGE SYSTEM

Filed July 31, 1941 5 Sheets-Sheet 1

FIG. 1

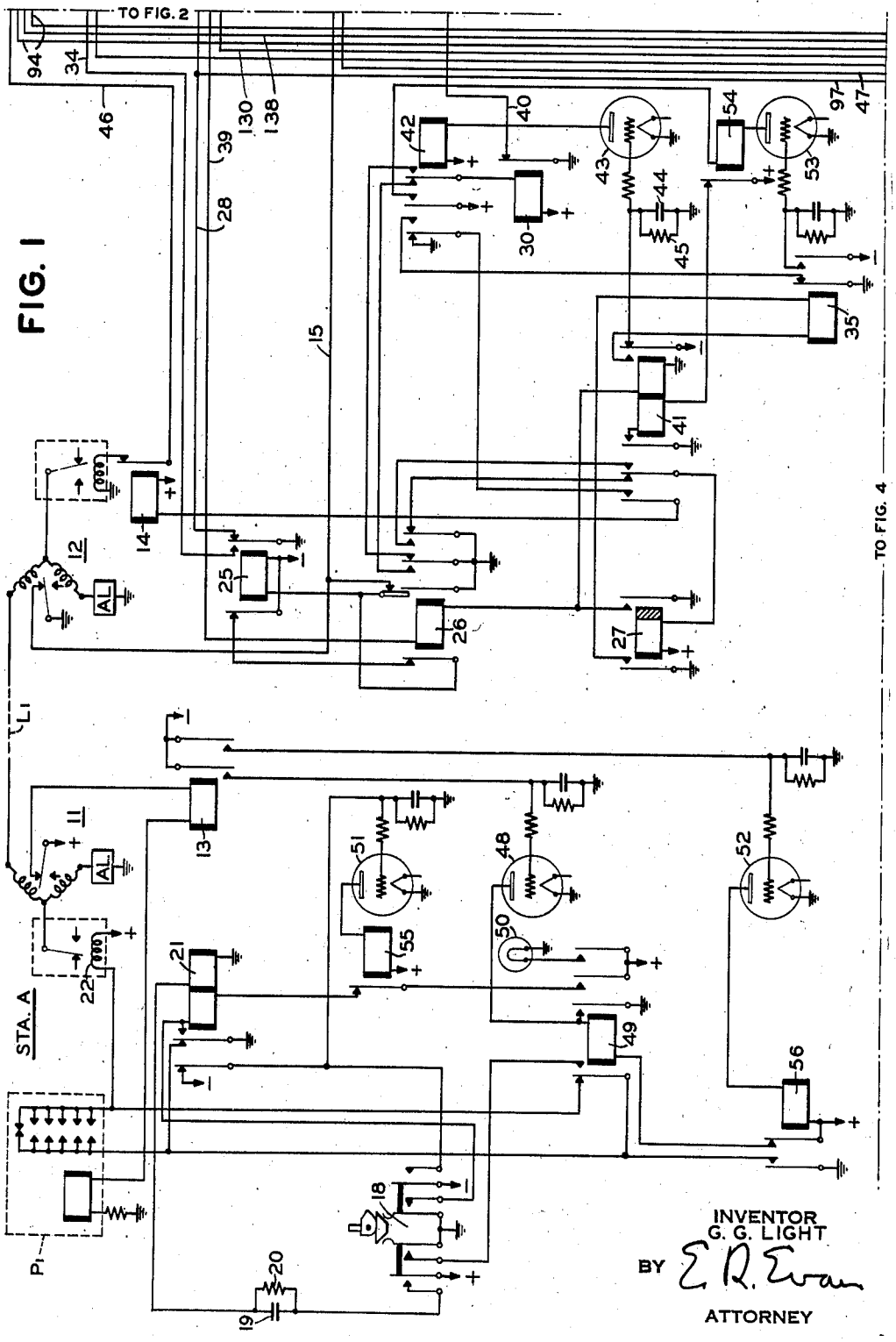

INVENTOR
G. G. LIGHT
BY E. R. Evans
ATTORNEY

June 20, 1944. G. G. LIGHT 2,351,621

PRINTING TELEGRAPH EXCHANGE SYSTEM

Filed July 31, 1941 5 Sheets-Sheet 2

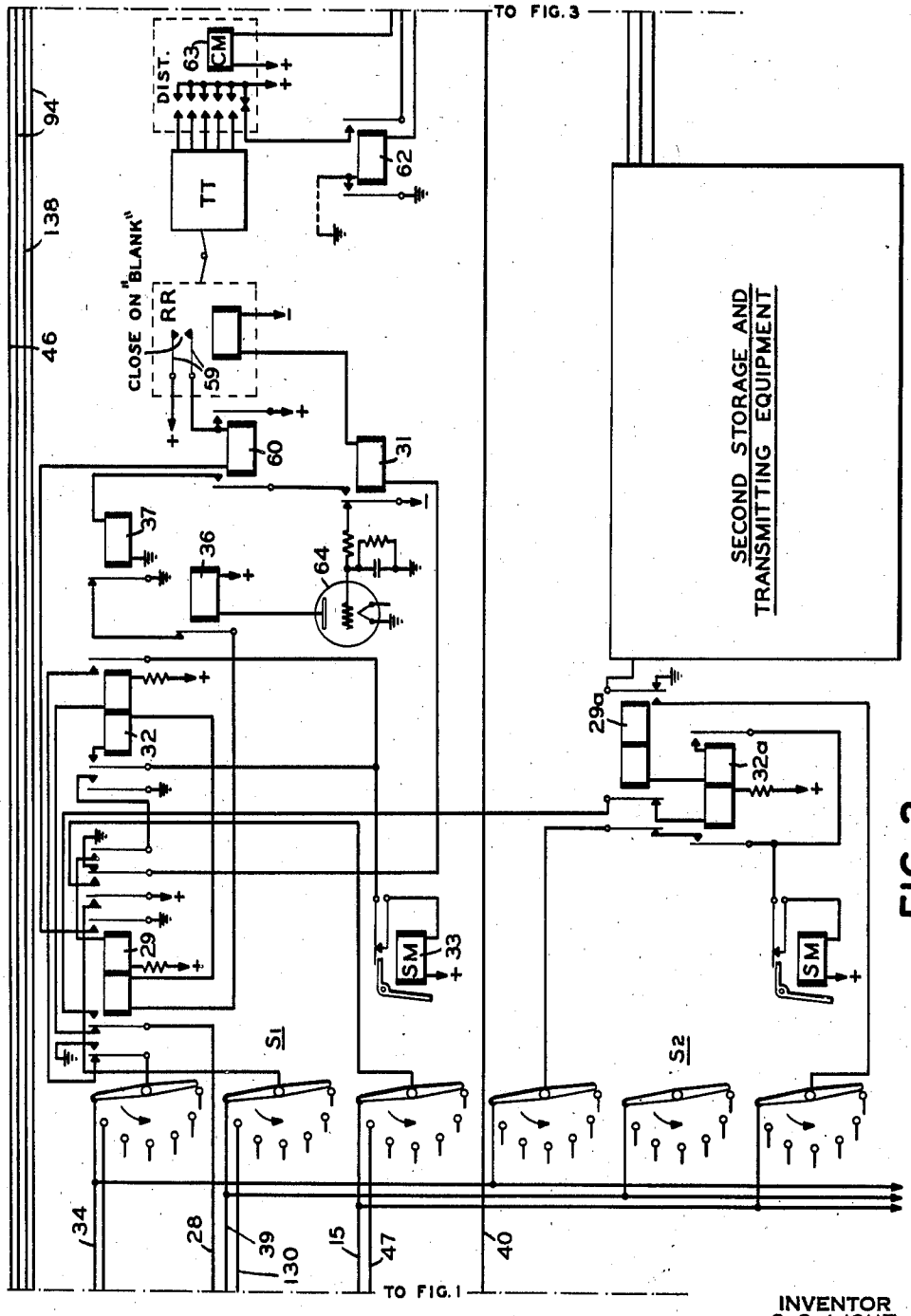

FIG. 2

INVENTOR
G. G. LIGHT
BY E. R. Evans
ATTORNEY

June 20, 1944. G. G. LIGHT 2,351,621

PRINTING TELEGRAPH EXCHANGE SYSTEM

Filed July 31, 1941 5 Sheets-Sheet 3

FIG. 3

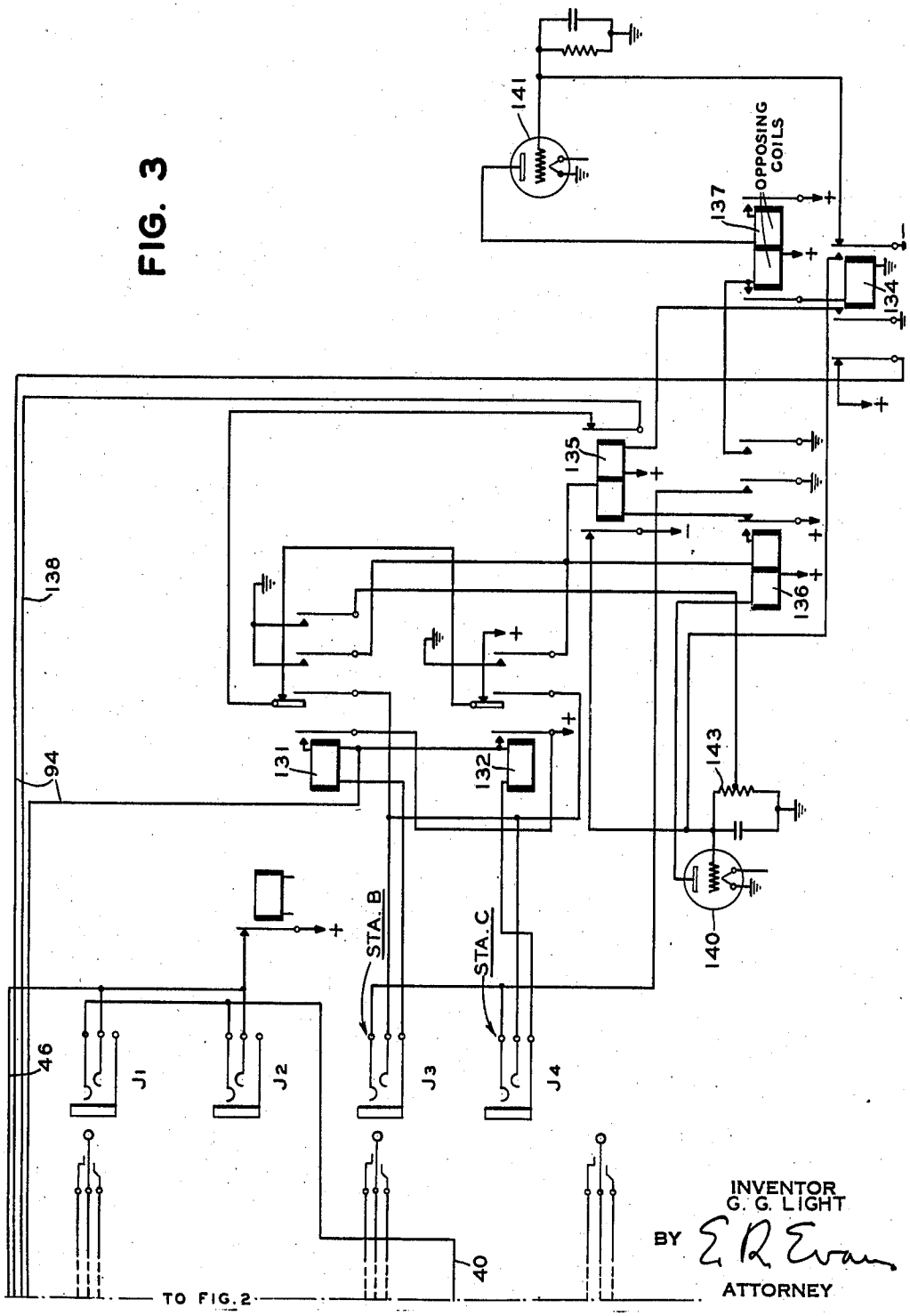

INVENTOR
G. G. LIGHT
BY E. R. Evans
ATTORNEY

June 20, 1944. G. G. LIGHT 2,351,621

PRINTING TELEGRAPH EXCHANGE SYSTEM

Filed July 31, 1941 5 Sheets-Sheet 4

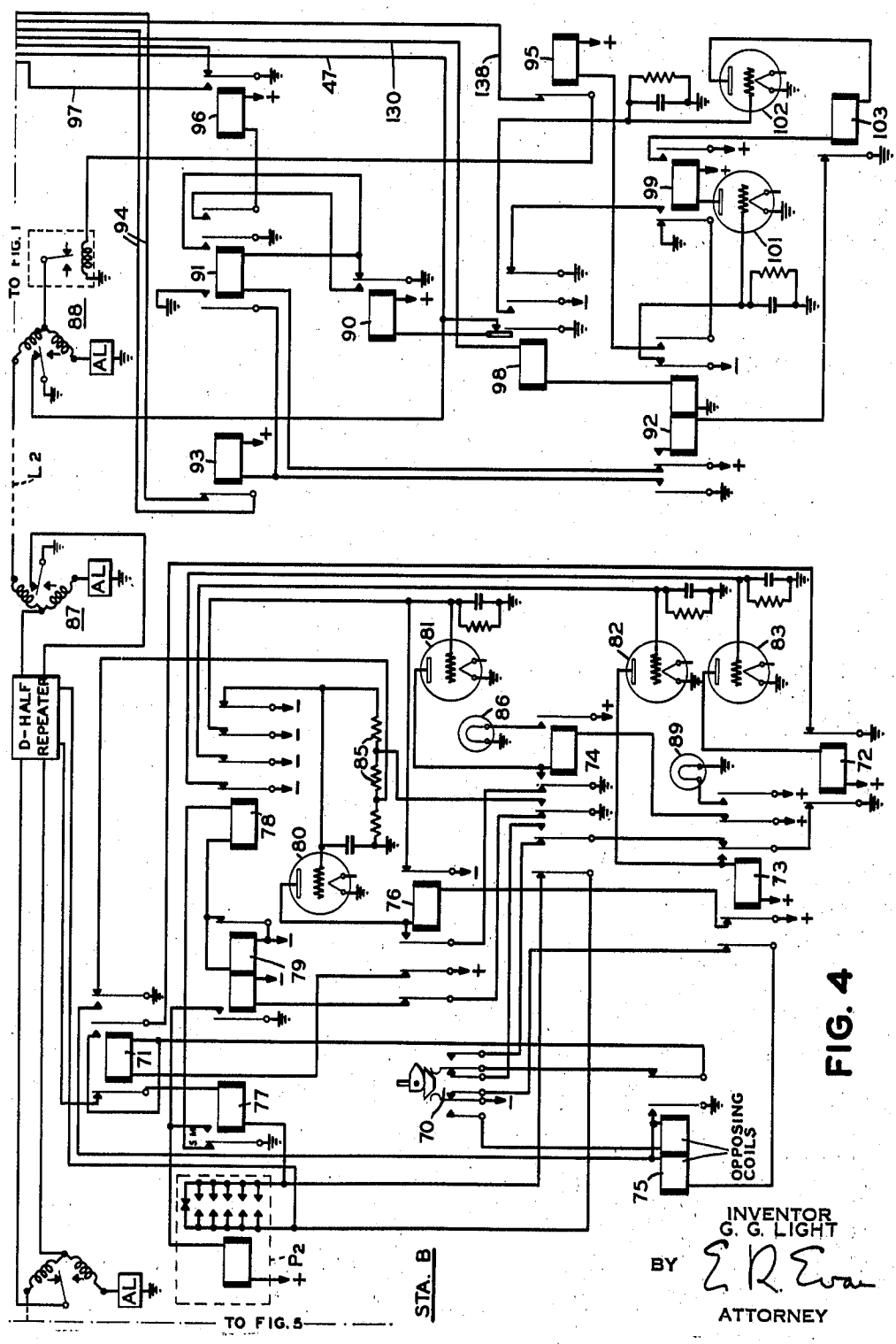

FIG. 4

INVENTOR
G. G. LIGHT
BY E. R. Evans
ATTORNEY

June 20, 1944. G. G. LIGHT 2,351,621

PRINTING TELEGRAPH EXCHANGE SYSTEM

Filed July 31, 1941 5 Sheets-Sheet 5

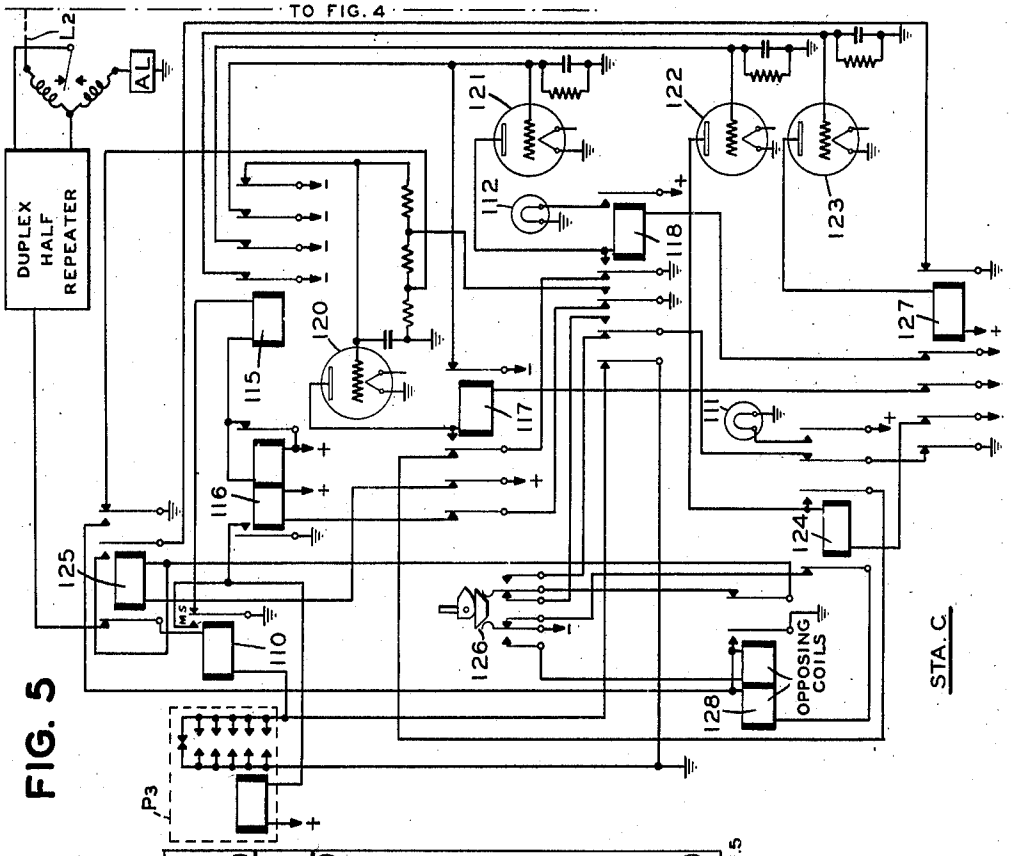

FIG. 5

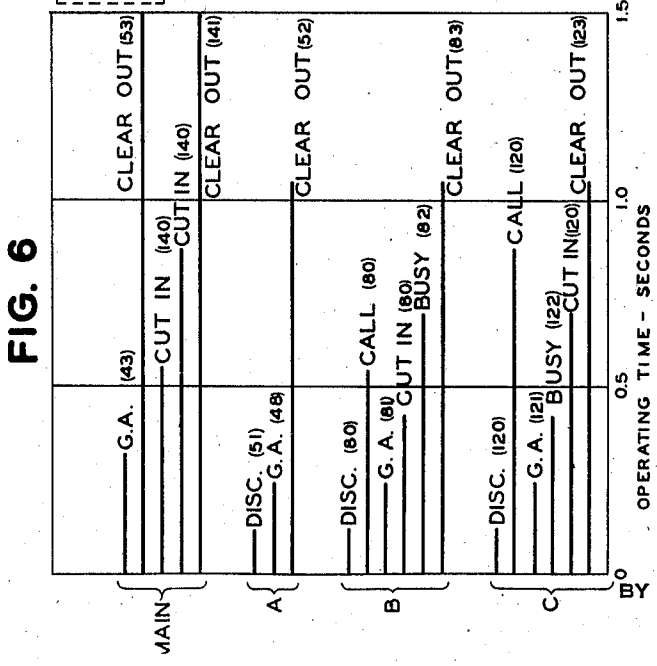

FIG. 6

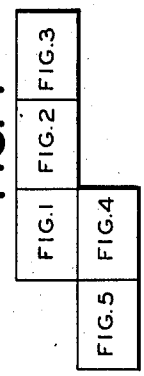

FIG. 7

INVENTOR
G. G. LIGHT
BY
ATTORNEY

Patented June 20, 1944 2,351,621

UNITED STATES PATENT OFFICE

2,351,621

PRINTING TELEGRAPH EXCHANGE SYSTEM

George G. Light, Kew Gardens, N. Y., assignor to The Western Union Telegraph Company, New York, N. Y., a corporation of New York

Application July 31, 1941, Serial No. 404,765

15 Claims. (Cl. 178—2)

This invention relates to telegraph systems and more particularly to multi-station printing telegraph systems embodying a plurality of stations or offices and arrangements for selectively interconnecting the transmitting and receiving apparatus or printers of the system. The invention involves an improvement in or modification of the systems shown in the patent to Wheeler, Hoover and Dirkes, No. 2,193,810, granted March 19, 1940, and in the copending application of G. G. Light and W. B. Blanton, Serial No. 350,402, filed August 3, 1940.

In general terms, the object of this invention is to simplify the selecting and control apparatus in systems of the above-mentioned character, and guard against faulty operation, as for example sending to a station where the receiving apparatus is not conditioned for operation or has been disconnected. Heretofore code transmitters and code-responsive equipment have been commonly employed for selecting stations, operating signals and motor controls, and effecting other functions in a multi-station system. The control equipment in some instances is quite complex, and the system is further complicated by the necessity for separating the control signals from the printer signals which are ordinarily sent over the same line circuits. In many systems, the character of the telegraph lines limits the character of the controlling code signals that can be used. One feature of the present invention is a novel arrangement for effecting station selection, for seizing and releasing printing or repeating apparatus, and operating supervisory signals or other functions over the line circuit without employing either code transmitters or code-responsive equipment.

Another object of the invention is to interlock the sending and receiving apparatus in a telegraph exchange system, wherein the transmitting apparatus at a main station or switching center may be temporarily connected with an outgoing line, in order that line circuit interruptions may be transmitted for signaling and control purposes from a remote station to the switching center and vice versa, irrespective of connections made to a line at the switchboard in the switching center. With this feature of the invention, it becomes possible to transmit control circuit-interruptions of predetermined length in both directions over the line circuit without the possibility of the duration of the signals being altered or distorted by the transmission of code signals to the line through the switchboard.

Another object of the invention is to provide improved means for selecting a station and locking out an unselected station on a multi-station or way station circuit.

Other objects and advantages of the invention will appear from the following description of the preferred embodiment thereof shown in the accompanying drawings, wherein:

Figs. 1, 2 and 3 taken together constitute a wiring diagram of a single-station line circuit and the terminal equipment at the main station or switching center;

Figs. 4 and 5 form a wiring diagram of a multi-station or way station circuit, also terminating in the equipment at the main station shown in Figs. 2 and 3;

Fig. 6 is a timing chart illustrating the preferred timing adjustments of the various timing units; and

Fig. 7 illustrates the manner in which Figs. 1 to 5 are arranged to form the complete circuit diagram.

In accordance with the invention, an exchange system is provided in which both single station and way station line circuits terminate at a main station or switching center containing a switchboard for interconnecting the line circuits. At the remote stations, a call is initiated by actuating a calling key and terminated by restoring said key. The operation of the calling key causes a predetermined interruption of the line circuit to the main station which is effective to pick up an idle storage and transmitting unit. As soon as an idle unit is seized, a line circuit interruption of a predetermined length is produced at the main station which is effective to operate a "go-ahead" signal at the remote station. If the line circuit becomes opened or the storage equipment accidentally disconnected, the "go-ahead" signal at the remote station is extinguished or restored to indicate at said station that transmission should be stopped. At the end of the message, the release and restoration of equipment are also accomplished by the transmission of line circuit interruptions of predetermined length, and certain guard features are incorporated, as will be pointed out hereinafter.

In the case of a multi-station or way station line circuit, the initiation of a call from one of the remote stations to the main station locks out the other station and also initiates a call to the main station in substantially the same manner as in the case of the single station circuit. In making an outgoing connection to the way station circuit at the switchboard, the desired sta-

tion is selected by the transmission of a line circuit interruption, of different length for each station on said circuit. The selecting interruption signal is automatically produced upon plugging into one or the other of a plurality of jacks, each individual to one of the stations in the way station circuit. At the end of the call, the circuit is released and the control equipment automatically restored to normal, a "clear-out" circuit interrruption signal being transmitted to the remote stations from the main office as in the case of a call to or from a station on the single-station line circuit.

Single-station line circuit

Referring to Figs. 1, 2 and 3 of the drawings, the printer P1 at station A, Fig. 1, is connected through the line L1 to the main office where messages received from station A may be recorded or stored and retransmitted over outgoing lines or channels terminating at said office at the switchboard represented by the jacks J1—J4, Fig. 3. Messages received from station A at the main office and from the other stations over lines terminating at said office are stored in the form of perforated tape in the receiving reperforators such as that shown at RR, Fig. 2, and repeated by the associated tape transmitter TT after the tape transmitter has been plugged into the jack representing the selected outgoing line circuit or channel substantially as described in the above-mentioned copending application of Light and Blanton. The tape transmitter may be similar to that shown in the Patent to Angel, No. 2,172,269, dated September 5, 1939. The reperforator may be a printer perforator similar to that shown in the patent to Dirkes and Wentworth, No. 2,143,828, dated January 10, 1939. When one of the remote stations, such as the station A, initiates a call to the main office, a finder switch S1 or S2 is operated to connect an idle receiving reperforator RR to the calling line in a manner to be described below. This general arrangement including a series of finder switches for connecting an idle receiving unit or a reperforator to a calling line is shown in a number of patents in the prior art including the above-mentioned patent to Wheeler et al. The arrangement shown herein is conventional except for certain features to be described, and therefore certain details of construction are omitted for the sake of simplicity.

The line L1 may be any suitable telegraph channel but for purposes of illustration it is shown as terminating at the respective offices or stations in terminal duplex sets 11 and 12 of a conventional character. The keyboard of the printer P1 is connected to the sending leg of the terminal duplex set 11 and the printer magnet is connected to the receiving leg thereof in series with a normally operated relay 13. The sending leg of the terminal duplex set 12 at the main office is connected through the back contacts of relay 14 to the switchboard, while the receiving leg is connected through the conductor 15 and contacts of relay 26 to the winding of relay 25. The energization of relay 26 when the finder switch S1 has connected to the calling line disconnects relay 25 from the receiving leg which is then connected through conductor 15 and the finder switch to the selector magnet of the reperforator RR.

When it is desired to initiate a call from station A to the main office or to one of the lines or channels terminating at the switchboard in the main office, the key 18 is actuated, thus closing a circuit from positive battery through the outer left hand contacts of the key 18, condenser 19 and shunt resistor 20 to the right hand winding of relay 21. The charging current of the condenser 19 causes relay 21 to attract its armatures momentarily, thus opening the line circuit extending from ground through the inner armature and back contact of said relay, the left hand armature and back contact of relay 49 in shunt relation to the keyboard contacts of the printer P1, and the winding of the transmitting relay 22. The operation of the transmitting relay 22 momentarily opens the rest or marking contacts of the differential relay of the terminal duplex set 12 at the main office, thereby opening the circuit of the normally operated relay 25, and said relay becomes deenergized. Upon the deenergization of relay 25, a circuit is closed through the left hand armature and back contact of said relay and the left hand armature and back contact of relay 26 in shunt relation to the winding of relay 25, thereby short-circuiting relay 25 to prevent the attraction of the armatures of said relay when the line circuit is reclosed. The deenergization of relay 25 closes a circuit through its right hand armature and back contact for initiating the operation of the first idle finder switch S1, S2, and so forth, to connect the associated idle reperforator to the line extending to the calling station A. As pointed out above, this general arrangement is well known in the art and various arrangements for distributing successive calls to idle receiving units or reperforators may be employed. As shown, the grounding of the "initiate" conductor 28 by relay 25 closes a circuit through the inner left hand armature and back contact of relay 29 and the right hand winding of relay 32 to battery, assuming that the receiving reperforator RR is idle. If the reperforator RR is in use, relay 29 will be operated to transfer the initiate circuit to the next finder switch S2, as shown.

The energization of relay 32 closes a circuit to the stepping magnet 33 of switch S1, which circuit may be traced through the right hand armature and front contact of relay 32, the left hand outer armature and back contact of relay 29 and the upper wiper of the switch S1 to the grounded bank contacts representing idle lines or lines which are already connected to a receiving reperforator and are thus grounded through the wipers of other finder switches. When the stepping magnet 33 of the switch S1, which is provided with self-interrupting contacts, as shown, has actuated the wipers of the switch into engagement with the bank contacts representing the calling line, in this instance the first bank contacts, the stepping of the switch stops, since the bank contact associated with the upper wiper is no longer grounded through the conductor 34 and the front contact associated with the right hand armature of relay 25 individual to calling station A. Thereupon the short circuit around relays 29 and 32 is opened, and relay 29 becomes energized through a circuit from battery through the stepping magnet 33, the left hand armature and front contact and left hand winding of relay 32, the left hand winding of relay 29, and the armatures and back contacts of relays 36 and 37 to ground. Relay 32 is locked up in series with the left hand winding of relay 29. Since the step-

ping magnet 33 is of low resistance compared to the windings of relay 29 and 32, the current through the stepping magnet is insufficient to actuate the switch wipers at this time.

The energization of relay 29 as described connects ground potential through the outer left hand armature and front contact thereof to the bank contact associated with the upper switch wiper of the switch S1 to prevent another of the finder switches from connecting to bank contacts multipled to the first contacts of switch S1. The energization of relay 29 transfers the "initiate" circuit through its left hand inner armature and front contact to the control relays associated with the second switch S2 so that the next succeeding call will be picked up by the second storage unit until the first storage unit has been released. The energization of relay 29 also closes a circuit through its second right hand armature and front contact, the middle wiper of the switch S1, conductor 39, the winding of relay 26 and the right hand armature and front contact of normally energized relay 27 for energizing relay 26. The energization of relay 26 closes the circuits of relays 25 and 30 at the right hand inner and middle contacts of said relay, and relays 25 and 30 become energized. The energization of relay 26 also opens at its outer right hand armature and back contact the circuit of slow release relay 27, and after a short interval the latter relay releases its armatures. The energization of relay 30, as described, removes ground potential from the conductor 40 extending to the jacks J1 and J2 of the switchboard individual to the line L1. As indicated, the conductor 40 forms a part of the clutch magnet circuit of any distributor (corresponding to the circuit of the clutch magnet 63 of the distributor shown in Fig. 2) when the associated transmitter is plugged into the jack J1 or J2. Thus, the energization of relay 30, individual to the line L1, stops transmission from the main office over said line to permit control signals or line interruptions to be transmitted to station A. Similar relays are associated with the switchboard circuits of each full duplex line to stop transmission from the main office momentarily while an incoming call is being set up or disconnected over the same line. The slow-release relay 27 is adjusted so that it does not release its armatures until the lapse of sufficient time to insure that the cam shaft of the distributor controlled by relay 30 has come to rest.

In order to indicate to the operator or attendant at station A that a connection to the receiving reperforator has been established and transmission may be commenced, the rest or marking line condition is interrupted for a predetermined period at the main office. This is accomplished as follows: Upon the deenergization of relay 27 as described, the short circuit around the right hand winding of relay 41 is opened, and said relay becomes energized in series with relay 26. Thereupon a circuit is closed from ground through the left hand outer armature and back contact of relay 42, the left hand outer armature and front contact of relay 41 and the winding of relay 14 to positive battery, whereupon relay 14 becomes energized to open the sending leg of the terminal duplex set 12, which operates the receiving differential relay of the terminal duplex set 11 at station A, causing relay 13 to become deenergized. At the same instant the energization of relay 41 opens the connection from negative battery to the grid of a vacuum tube 43 having the plate circuit thereof connected to the winding of relay 42. The vacuum tube 43 constitutes a timing device for operating relay 42 after a predetermined lapse of time, and for this purpose, the grid circuit of the tube 43 is provided with a shunt condenser 44 and grid leak 45 so that the potential of the grid of said tube gradually drifts toward the ground or open-circuit potential whenever the negative cut-off potential has been removed from the grid by the operation of relay 41. Thus, after a predetermined time delay which may be only a fraction of a second, relay 42 becomes energized and opens at its outer armature and back contact the above-described circuit of relay 14. The deenergization of relay 14 recloses the line circuit so that the line interruption is accurately timed by the characteristics of the grid circuit of the vacuum tube 43. The operation of relay 42 also opens the circuit of relay 30, and said relay recloses the clutch magnet circuit 40, thus permitting transmission over the line L1 through the switchboard to be resumed.

At station A, the deenergization of relay 13 as described removes negative cut-off potential from the grid of the slow-to-operate or timing vacuum tube 48 and, after a predetermined period of time slightly less than the length of the line interruption caused by the timing tube 43, current flows through the vacuum tube 48 to energize the associated relay 49 and light the supervisory lamp 50 to indicate to the attendant at station A that the connection to the idle reperforator has been completed and transmission may be commenced. The vacuum tubes 48, 51 and 52 at station A and tube 53 at the main office are all arranged like the tube 43 to impart a delayed-operating characteristic to the relay in the plate circuit thereof by control of the grid potential as described above, but the timing of the vacuum tubes is fixed at different periods for the purposes to be pointed out below. By way of example, suitable timing adjustments for the respective timing control units are shown in Fig. 6.

Upon the energization of relay 49 as described, a locking circuit for said relay is closed through the right hand inner armature and front contact thereof that is independent of vacuum tube 48. A circuit is also closed through the right hand middle armature and front contact of said relay, the armature and back contact of relay 55, the left hand winding of relay 21 and the right hand inner contacts of the key 18 whereupon relay 21 becomes energized and removes ground potential at the inner armature and back contact thereof from the keyboard of the printer P1. The energization of relay 49 also opens at its left hand armature and back contact a short circuit around the contacts of the keyboard of the printer P1 so that the printer is placed in operating condition, the line circuit through the keyboard contacts being connected through the left hand armature and front contact of relay 49 to ground at the left hand inner contacts of the key 18. The operation of the keyboard of the printer P1 transmits alternate rest or marking and spacing permutation code signals over the line L1, the signals being transmitted through the conductor 15 and the contacts of the receiving relay of the terminal duplex set 12 at the main office and the contacts of the lower wiper of the switch S1 to the magnet of the receiving reperforator RR which records

the received message in the form of perforated tape adapted to operate an associated tape transmitter TT to repeat the signals through the selected outgoing line circuit or channel.

After transmission has been completed the operator or attendant at station A releases the connected storage and transmitting equipment by restoring the key 18. If the operator fails to restore the key 18 at the end of the message or if, for any reason, no message signals are transmitted for, say thirty seconds, the timing vacuum tube 64 becomes conducting at the end of the selected period and relay 36 in the plate circuit of said tube is energized. The energization of relay 36 releases relays 29 and 32 to release the switch S1 and transmit a disconnect signal to station A in a manner described below in connection with the normal disconnect operation. This feature of the invention prevents the operator at a calling station from tying up a reperforator indefinitely, but it will be noted that release of the switch in this manner will not be effected if the line circuit goes open, as in that case the series line relay 31 remains deenergized and maintains a negative cut-off potential on the grid of vacuum tube 64. Upon the restoration of the key 18 at the end of a message, the line circuit including the winding of the transmitting relay 22 and the left hand inner contacts of the key 18 is opened and at the same moment, the negative cut-off bias potential is removed from the grid of the vacuum tube 51. After a predetermined time interval, current flows through vacuum tube 51 and the relay 55 in the plate circuit thereof becomes energized. The energization of relay 55 opens the circuit of the left hand locking winding of relay 21 and said relay becomes deenergized, thereby reclosing the line circuit including relay 22.

The timing of the line interruption as described is adjusted by employing suitable characteristics for the condenser and leak in the grid circuit of the vacuum tube 51 so that its duration is equal in length to transmission of one character from the keyboard of the printer P1. Therefore, the receiving reperforator RR at the main office responds as though a "blank" or all-spacing code combination had been transmitted, and the blank-reading contacts 59 on the reperforator will momentarily close. The construction of a reperforator having contacts closed upon the reception of a particular code combination, for example, a "blank," is disclosed in the above-mentioned Dirkes and Wentworth patent. The contacts could be applied to the stop member for the blank selection if the sixth pulse cutout was omitted. The closure of contacts 59 effects release of the finder switch S1 in a manner to be described. Upon the operation of relay 55 as described above, the circuit of the left hand or locking winding of relay 21 is opened and the latter relay becomes deenergized. Negative cut-off potential is connected through the outer armature and back contact of relay 21 to the bridge circuit of the vacuum tube 51 whereupon relay 55 becomes deenergized. All relays except relay 49 at station A are now restored to normal but the supervisory lamp 50 remains lighted through a contact of relay 49 until finder switch S1 at the main office has been restored to normal. The purpose of this arrangement will be described hereinafter.

The closure of the blank-reading contacts 59 of the reperforator at the main office closes the circuit of relay 60 and at the end of the blank the line relay 31 which responds to line signals is reenergized to close a circuit through its armature and front contact and the left hand armature and front contact of relay 60 for operating disconnect relay 37. The energization of relay 37 interrupts the circuit through the left hand windings of relays 29 and 32 and said relays become deenergized, thus restoring the selector switch S1 to normal in readiness for the next call. Upon the deenergization of relay 29, the circuit of relay 26 is opened at the second right hand armature and front contact of relay 29. The deenergization of relay 26 operates relay 30 to stop transmission over the line L1 from the main office while transmitting the break signal of such duration as to extinguish the supervisory lamp 59 at the remote station A. The circuit of relay 30 may be traced through the middle right hand armature and back contact of relay 26 and the inner armature and front contact of relay 42. The energization of relay 30 opens the circuit of the clutch magnet of the transmitting distributor of any transmitter which may be connected through the switchboard to the line L1 as described above. The deenergization of relay 26 further opens at its outer right hand armature and front contact the circuit of slow relay 27 and, after a short interval sufficient to permit the cam shaft of the sending distributor to come to rest, relay 27 releases its armatures. Upon the deenergization of relay 27, the circuit of relay 35 is interrupted at the left hand armature and front contact of the first-mentioned relay, and relay 35 becomes deenergized. Upon the deenergization of relay 35, a circuit is closed through the inner armature and back contact of said relay, the outer armature and front contact of relay 42 and the outer left hand armature and front contact of relay 41 for operating relay 14 to interrupt the line circuit at station A at the same instant that negative cut-off potential is removed from the grid of vacuum tube 53 at the outer armature and front contact of relay 35. After a predetermined time interval fixed by the characteristics of the grid circuit of the vacuum tube 53, current flows through the winding of relay 54 in the plate circuit thereof and said relay becomes energized. Upon the energization of relay 54 the circuit of the left hand locking winding of relay 41 is interrupted, whereupon said relay becomes deenergized and opens the above-described circuit of relay 14. The deenergization of relay 14 recloses the line circuit. Upon the deenergization of relay 41, negative cut-off potential is applied through the right hand armature and back contact of said relay to the grid of the vacuum tube 43 whereupon relay 42 becomes deenergized and opens the circuit of relay 30. Upon the deenergization of relay 30, the sending distributor of the transmitter plugged into the line L1 is again rendered operative for transmission.

At station A, the line relay 13 in the receiving leg of the terminal duplex set 11 becomes deenergized in response to the opening of the line circuit by the operation of relay 14, as described above, thereby removing negative cut-off potential from the grids of vacuum tubes 48 and 52. After a predetermined time interval long enough to permit both tubes 48 and 52 to become conductive but slightly shorter than the timing of vacuum tube 53 at the main office, current flow is established through the tubes 48 and 52, and their associated relays 49 and 56 respectively. Since relay 49 was previously locked up through

its inner right hand armature and front contact, it remains energized until relay **56** becomes energized. Upon the energization of relay **56** the circuit of relay **49** is interrupted and said relay becomes deenergized to thereby extinguish the lamp **50**. At the end of the line circuit interruption, relay **13** again becomes energized and connects negative cut-off potential through its armatures and front contacts to the grids of tubes **48** and **52**, thereby deenergizing relay **56** and maintaining relay **49** deenergized.

It will be noted that an important feature of the invention is the operation of the supervisory lamp **50** solely under the control of the finder switches at the main office, the lamp being lighted as soon as one of the switches has seized an idle reperforator and being extinguished, not by the disconnect key **18**, but when the finder switch has been released. Thus, if a false or accidental blank signal is received at the main office owing to line or apparatus trouble, which would cause the switch to release the connected reperforator, the supervisory lamp **50** will become extinguished to indicate that the receiving unit at the main office has been disconnected. Similarly, if the receiving reperforator is disconnected either by the operation of the relay **36** as described above or in any other manner by an attendant at the main office, for example, the supervisory lamp **50** would serve as a positive indication to the operator or attendant at station A to stop sending until the line has been connected to another receiving unit.

As shown, the printer P1 at station A does not respond to its own keyboard to make a home copy of the messages transmitted from the station but is always in readiness to respond to transmission from the main office. However, on lines which are not arranged for full duplex operation, the printer magnet may be connected in series with the keyboard as usual. Since the keyboard contacts are short-circuited by relay **49** when the receiving reperforator at the main office becomes disconnected, the failure of the printer to function provides an immediate signal to the operator that the circuit is not in readiness for transmission.

Way station circuit

The operation of a way station circuit where a plurality of stations are connected through a single series line circuit to the main station includes additional features not embodied in the single station circuit described above. Stations B and C, Figs. 4 and 5, are shown connected to a line circuit L2, which terminates at the main station in the finder switches S1 and S2, as in the case of the line L1. For the purposes of illustration, the line L2 is arranged for half duplex operation, providing for transmission from either of the stations B and C to the main office or switching center or for transmission from the switching center to either of said stations, but not for transmission in both directions at the same time. This illustrates the flexibility of the control system provided by the invention which will operate over either a half duplex, a full duplex (single-station operation), or any normally closed circuit adapted to transmit telegraph signaling impulses.

The operation of the way station circuit is generally similar to that of the single station circuit described above except that provisions are made for operating a busy signal and locking out one of the remote stations when a call is initiated to the main station from the other remote station, and means is provided at the main office or switching center for selectively calling either of the remote stations and locking out the other station. In the idle line condition, the printers P2 and P3 at stations B and C, respectively, are non-responsive to line signals, since the printer magnet is connected to holding ground. In view of the foregoing detailed description of Figs. 1 to 3, the description of the operation of the way station circuit will be directed to these additional features. Assuming that the line circuit is idle and that the operator or attendant at station B desires to initiate a call to the main office or transmit a message through the main office switchboard to an outgoing line or channel, upon the operation of the calling key **70**, relay **71** becomes energized to interrupt the line circuit at the left hand armature and back contact of said relay to initiate the operation of one of the finder switches S1 or S2, as described above in connection with Figs. 1, 2 and 3. In this instance, however, instead of a line interruption of indeterminate length, the duration of the line interruption is timed in order to lock out the printer P3 and operate a busy signal at station C.

The circuit of relay **71** may be traced through the left hand armature and back contact of relay **72**, the right hand inner armature and back contact of relay **73**, the third left hand armature and back contact of relay **74**, the right hand make contacts of the key **70**, the outer armature and back contact of relay **75**, the winding of relay **71**, and the middle left hand armature and back contact of relay **76**. Relay **71** locks up through its right hand inner armature and front contacts to ground at the right hand armature and back contact of relay **72**. The opening of the line circuit by relay **71** closes the back or spacing contacts of the line relay **77**, thus closing a circuit through said contacts, the winding of relay **78** and the right hand winding of the normally operated relay **79** for operating relay **78**. The energization of relay **78** removes negative cut-off potential from the grid of the timing tube **80** to cause the operation of the associated relay **76** after a predetermined time interval fixed by the characteristics of the grid circuit of said tube. The timing units or tubes **80**, **81**, **82**, **83**, as well as the other vacuum tubes shown at the main office and station C, are similar in arrangement and operation to those described above in connection with Figs. 1 and 2, and the timing characteristics of the tubes are shown in Fig. 6. The grid circuit of the vacuum tube **80**, however, further includes a tapped leak resistor **85** which is operative to change the timing of the associated tube depending upon which tap on the resistor is connected to ground, as obviously the less resistance that is connected in shunt to the grid condenser, the more rapidly the charge on the condenser will be equalized to permit the associated tube to become conducting. During the sending of the calling signal, the taps on the resistor **85** are ungrounded, thus delaying the operation of the tube **80** and relay **76** to the maximum extent. When the tube **80** becomes conducting, relay **76** in the plate circuit thereof becomes energized, locks up, and at its left hand middle armature opens the circuit of relay **71**, whereupon the line circuit is reclosed. Relay **76** also opens the circuit of relay **79**, thus removing holding ground from printer P2. The reenergization of the line relay **77** causes the deenergization of relay **78** and the tubes **81**, **82**, and **83** are rendered ineffective.

The line interruption initiated as described above and transmitted through the duplex sets 87 and 88 operates the armature of the differential relay of the duplex set 88 to spacing, thus opening the circuit of the line relay 90 and said relay becomes deenergized. A circuit is closed from ground through the armature and back contact of relay 90, the winding of relay 91, and the inner left hand armature and back contact of relay 92 to battery, whereupon relay 91 becomes energized and locks up through its right hand inner armature and front contact to a circuit that is independent of the contacts of relay 90.

The energization of relay 91 closes a circuit through its left hand armature and front contact for energizing relay 93 to open the "seize" circuit of the switchboard control equipment to prevent a transmitter plugged into the line L2 from seizing the circuit until the call that has been initiated from station B has been completed and the circuit released. At the end of the line interruption resulting from the operation of calling key 70, as described above, the line relay 90 is reoperated and closes a circuit through its armature and front contact and the right hand outer armature and front contact of relay 91 for operating relay 96. The energization of relay 96 applies ground potential to the "initiate" circuit 97 to start one of the finder switches hunting for the calling line in the same manner as described above in connection with Figs. 1 and 2. It will be noted that the "initiate" circuit is not closed until the end of the circuit interruption in order to prevent the receiving reperforator RR being connected to the line while the line is still open.

The transmission of the calling line interruption from station B to the main office also releases the line relay 110 at station C for a predetermined interval to cause the operation of the busy lamp 111 at said station and to lock out the station until the line circuit is released by station B. Upon the release of the line relay 110 at the beginning of the calling line interruption, a circuit is closed through the spacing contacts thereof and the windings of relays 115 and 116 for operating relay 115, relay 116 being normally operated through a circuit including its left hand winding, the left hand outer armature and back contact of relay 117 and the second left hand armature and back contact of relay 118. Upon the energization of relay 115, negative cut-off potential is removed from the grid of vacuum tubes 120, 122 and 123 and, after a predetermined time interval somewhat less than the interval for which the timing unit 80 at station B is adjusted, tube 122 becomes conducting to operate relay 124 in the plate circuit thereof. Relay 124 locks up through its right hand inner armature and front contact and the inner left hand armatures and back contacts of relays 117 and 118 so that, if a longer line interruption is received, the operation of either relay 117 or 118 by the associated tubes 120 and 121 will cause the release of relay 124. In the present instance, however, the reclosure of the line circuit reenergizes the relay 115 and tube 120 is maintained non-conducting, whereas the tube 121 has been held non-conducting by the cut-off potential applied to the grid thereof through the contacts of relay 117. The energization of relay 124 closes a circuit through its outer right hand armature and front contact for lighting the "busy" lamp 111, and opens at its middle right hand armature and back contact the circuit of relay 125 so that said relay cannot be operated to open the line circuit or initiate a call in response to the operation of the calling key 126. Thus, the apparatus at station C is locked out while the line circuit is in use by station B, and the "busy" signal 111 remains lighted to indicate to the attendant or operator at station C the busy condition of the line.

Referring again to Figs. 2, 3 and 4, the connection of an idle reperforator through the instrumentality of one of the finder switches S1 and S2 to the calling line applies battery potential through the second right hand armature and front contact of relay 29, the middle switch wiper of the finder switch and the conductor 130 to the windings of relays 98 and 92 to disconnect the line relay 90 from the line circuit and to initiate the transmission of the go-ahead signal to station B, as described above in connection with the transmission of a signal to station A when an idle reperforator has been connected to the line. The operation of relay 98 also establishes circuits for opening the line and timing the opening through the control of tube 102 in response to the subsequent disconnect signal. The energization of relay 92 closes a circuit through its right hand outer armature and front contact for operating relay 95 to open the sending leg of the terminal duplex set 88 at the same instant that negative cut-off potential is removed from the grid of the vacuum tube 101 employed to time the line interruption for operating the go-ahead signal at station B (or station C, in case of a call initiated from that station). When current is established through the relay 99 by the vacuum tube 101, the circuit of relay 95 is broken at the left hand armature and back contact of relay 99 to reclose the line circuit.

At station B, the deenergization of the line relay 77 operates relay 78, as described above, to remove negative cut-off potential from the grids of the vacuum tubes 80, 81, 82 and 83. Just before the end of the line circuit interruption, the tube 81 becomes conducting and relay 74 in the plate circuit thereof is energized. Relay 74 becomes locked up and opens the locking circuit of relay 76 at its inner left hand armature. The energization of relay 74 lights the "go-ahead" supervisory lamp 86 to indicate that transmission may be commenced, and at its outer left hand armature and back contact removes the short circuit around the keyboard contacts of the printer P2. After transmission has been completed, the circuit is released and the equipment restored to normal by restoring the key 70. At this time a line interruption is again produced under the control of the timing unit 80, but now the upper tap connection on the resistor 85 in the grid circuit of the tube 80 is grounded through the second left hand armature and front contact of relay 74, thus decreasing the time required for the grid of the vacuum tube 80 to return to a potential which will permit current flow through the tube. The shorter line interruption is indicated by the diagram of Fig. 6. The length of the line interruption corresponds to the transmission of a "blank" and the receiving reperforator closes its blank-reading contacts, as described above, to release the associated finder switch. When the control relays associated with the finder switch are restored to normal, battery potential is removed from the conductor 130 to cause the release of relay 98 and the transmission of a line interruption for

the purpose of clearing out the apparatus at the calling station B and extinguishing the busy lamp and restoring the equipment at station C.

In the foregoing description, it will be evident that the release of relay 98 operates and then releases relay 95 after a time interval determined by the adjustment of vacuum tube 102 and its associated relay 103. The release of the line relay 77 at station B for this period of time causes the energization of relay 78, as described above, to operate first to remove cut-off potential from the tubes 80, 81, 82 and 83. The tubes 80 and 81 become conducting, but a moment later the tubes 82 and 83 also become conducting and the clear-out relay 72 and relay 73 are operated. As soon as the line circuit is reclosed and relay 78 deenergized, relays 72 and 73 become deenergized and the equipment at station B is restored to normal.

Similarly, at station C the reception of the long circuit interruption causes the energization of the clear-out timing unit 123 and the associated relay 127 to unlock the relay 124, extinguish the busy lamp 111 and restore the equipment at station C to normal.

In the case of a call initiated from station C by the actuation of the calling key 126, an idle reperforator at the main office is seized and the printer at station B locked out in substantially the same manner as described above in connection with the placing of a call from station B. However, as indicated in the diagram of Fig. 6, the calling signal sent from station C is of longer duration than that sent from station B and the timing unit 82 of station B which responds to the busy signal (call from station C) is adjusted to require a longer circuit interruption than the timing unit 122 controlling the busy signal at station C. Upon the operation of relay 73 in response to the initiation of a call from station C, the "busy" lamp 89 at station B is lighted and the circuit to relay 71 is opened to prevent its operation if key 70 should be actuated at this time. Station C receives a "go-ahead" signal from the main station, sends a disconnect signal and responds to a clear-out signal from the main station, generally in the same manner as described above in connection with a call from station B.

When a message is received for one of the stations B or C on the multi-station circuit, the operator plugs the call into line L2 at the switchboard and the transmission of the message is preceded by an automatic selection signal which renders the printer of the called station operative and locks out the printer of the other station. Thus, for example, assuming that the reperforator RR, Fig. 2, has recorded a message for the station B on the line L2, the associated tape transmitter TT is plugged into the jack J3 individual to said line. Likewise, calls for station C are plugged into jack J4 individual to the line L2. Assuming that the line circuit is not in use when the plug is inserted in the jack J3, a circuit is closed from ground at the winding of relay 62 in the cord circuit through said winding to the lower contacts of the plug and jack J3, the winding of relay 131, circuit 94 extending through the armature and back contact of relay 93, and the left hand armature and back contact of relay 134 to positive battery whereupon the relay 131 becomes energized. The control relays and circuits associated with the cord circuit and switchboard are not shown in detail, since they are shown in the copending application of Light and Blanton referred to above and are unnecessary for the understanding of the present invention. Since this circuit for seizing the line L2 includes contacts of relay 93, it will be apparent that relay 131 will not be energized until after any call which is in progress from one of the remote stations B and C has been completed.

The energization of relay 131 closes a circuit from ground through the third armature and front contact thereof, the left hand winding of relay 135, and the inner armature and back contact of relay 136 for operating relay 135. At its second armature and make-before-break contacts, relay 131 transfers the line circuit through the contacts of relay 135, conductor 138 and the contacts of relay 95 to the sending relay so that the tape transmitter TT will be operative to send over the line circuit L2 when the clutch-magnet circuit is closed at the end of the selection signals. The operation of relay 135 interrupts the sending circuit for a predetermined interval effective to render the printer P2 at station B operative and to operate the busy signal at station C. The operation of relay 135 is timed by the vacuum tube 140, since negative cut-off potential is removed from the grid of said tube at the left hand armature and back contact of relay 135, and the tube 140 after a predetermined interval energizes relay 136 to break the circuit of relay 135 and thereby reclose the line circuit. The grid leak resistor 143 associated with the vacuum tube 140 has a tapped connection to the outer armature and front contact of relay 131 so that the timing of the tube 140 is comparatively short in the case of a transmitter plugged into the jack J3 (see timing chart, Fig. 6). In the case of a transmitter plugged into the jack J4, relays 132 and 135 are operated in a similar manner to that described above, but the tapped connection to the resistor 143 is not grounded so that the timing unit 140 causes a longer line interruption, operative to cut in station C and operate the busy lamp at station B.

In the case of the shorter line interruption, the deenergization of line relay 77 at station B energizes relays 78 and 79, as described above, and after a predetermined time interval the timing unit 80 causes relay 76 to become energized and locked up. The energization of relay 76 interrupts the left hand locking circuit of relay 79, and relay 78 becomes deenergized when the line circuit is reclosed. The deenergization of relay 79 removes ground potential from the printer magnet of the printer P2 and said printer will respond to the printer signals received over the line L2. At station C, however, the same line interruption operates the line relay 110, control relays 115 and 116, the timing unit 122, and the associated busy relay 124, thereby lighting the "busy" lamp 111. Relay 116 remains locked up to contacts of relays 117 and 118 so that the printer magnet of printer P3, which is grounded at the contacts of relay 116, does not respond to the line signals. The operation of relay 124 also locks the equipment so that the operation of the calling key 126 will not be effective to render the printer operative or initiate a call.

In the case of the longer circuit interruption to select station C, the timing unit 120 operates after timing unit 122 and causes the energization of relay 117 to render the printer P3 operative and the busy lamp 111 is extinguished when relay 115 is restored. At station B, how-

ever, the longer circuit interruption operates relay 73 through the instrumentality of the timing unit 82 to light the "busy" lamp 89, and the printer magnet of the printer P2 is locked against operation by the energization of relay 79.

When the connection to the line L2 is electrically broken in response to the end-of-message signal, as described in the above-mentioned copending application of Light and Blanton, relay 131 becomes deenergized and opens at its third armature and front contact the locking circuit of relay 136, whereupon said relay becomes deenergized. The deenergization of relay 136 opens the circuit through the left hand operating winding of relay 137, but said relay is locked up through the left hand armature and front contact of said relay and the winding of relay 134 to ground, whereby relay 137 remains energized and relay 134 becomes energized as soon as relay 136 becomes deenergized. The energization of relay 134 removes negative cut-off potential at its right hand armature and back contact from the grid of timing unit 141 at the same instant that the line circuit is opened by the energization of relay 135 through a circuit including the left hand armature and front contact of relay 134. After a predetermined time interval fixed by the grid circuit of the tube 141, the flow of current through said tube and the right hand winding of relay 137 in opposition to the left hand winding of said relay causes said relay to become deenergized. Thus, the timing unit 141 times the circuit interruption employed to clear out the called station and restore the busy lamp at the other station in the same manner as described above. The deenergization of relay 137 opens the circuit of relay 134 which in turn opens the circuit of relay 135. The deenergization of relay 135 recloses the line circuit in readiness for the next call either from or to one of the remote stations B and C. It will be noted that the seize circuit 94 is held open at the left hand back contact of relay 134 until the end of the clear-out signal to prevent another transmitter which might be plugged into the line from obtaining a connection until the equipment is restored to normal. In the case of a call through the jack J4, the same clear-out signal is transmitted under the control of timing unit 141 upon the deenergization of relay 132 when the cord circuit is disconnected.

It is contemplated that various types of control and switching equipment may be employed, since the invention is not limited to that shown and described herein but includes modifications falling within the terms of the appended claims.

I claim:

1. In a multi-station telegraph system, telegraph lines or channels, a plurality of stations at which said lines or channels terminate, printers at said stations for effecting communication between stations over said lines or channels, each of said printers including means responsive to alternate rest or marking and spacing signal conditions in permutation code in said lines or channels for controlling the printer, means at one station for interrupting the rest condition of the line or channel to another station for two different periods of predetermined duration, timing means at said other station for detecting said two line interruptions, means including said timing means for rendering said other station responsive to the call upon receipt of one of said line interruptions and for restoring the equipment thereat to normal upon receipt of the other line interruption, means at said other station to interrupt the rest condition of said line or channel for a third period of predetermined duration and timing means at said one station for detecting said third line interruption.

2. In a multi-station telegraph system, telegraph lines or channels, a plurality of stations at which said lines or channels terminate, printers at said stations for effecting communication between stations over said lines or channels, each of said printers including means responsive to alternate rest or marking and spacing signal conditions in permutation code in said lines or channels for controlling the printer, means at one station for interrupting the rest condition of the line or channel to a main or switching station for two different periods of predetermined duration, means at said main station responsive to one of said two line interruptions for rendering the main station responsive to the call from said one station and to the other line interruption for clearing out the call, means at said main station for interrupting the rest condition of said line or channel for a third period of predetermined duration as a clear-out signal and means at said one station for restoring the equipment thereat to normal upon receipt of said clear-out line circuit interruption.

3. In a multi-station telegraph system, a main office or switching center and a plurality of other stations, telegraph lines or channels connecting said other stations to said main office, switching means at said main office for interconnecting said lines or channels, printers at said stations for effecting communication over said lines or channels, receiving devices including tape reperforators at said main office for storing message signals from the other stations, means to connect a tape reperforator temporarily to a line or channel when a call is initiated from the station on said line or channel and means at the calling station to indicate that the connected reperforator has been disconnected.

4. In a multi-station telegraph system, a main office or switching center and a plurality of other stations, telegraph lines or channels connecting said other stations to said main office, switching means at said main office for interconnecting said lines or channels, printers at said stations for effecting communication over said lines or channels, receiving devices including tape reperforators at said main office for storing message signals from the other stations, means to connect a tape reperforator temporarily to a line or channel when a call is initiated from the station on said line or channel and means at the calling station automatically controlled from the main office to render the local printer ineffective if the connected reperforator becomes accidentally disconnected.

5. In a multi-station telegraph system, a main office or switching center and a plurality of other stations, telegraph lines or channels connecting said outer stations to said main office, switching means at said main office for interconnecting said lines or channels, printers at said stations for effecting communication over said lines or channels, receiving devices including tape reperforators at said main office for storing message signals from the other stations, means to connect a tape reperforator temporarily to a line or channel when a call is initiated from the station on said line or channel, means operable from the calling station to release the reperforator and means to automatically release the re-

perforator if the calling station operator fails to disconnect.

6. In a multi-station telegraph system, a main office or switching center and a plurality of other stations, telegraph lines or channels connecting said other stations to said main office, switching means at said main office for interconnecting said lines or channels, printers at said stations for effecting communication over said lines or channels, receiving devices including tape reperforators at said main office for storing message signals from the other stations, means to connect a tape reperforator temporarily to a line or channel when a call is initiated from the station on said line or channel, means for interrupting the line circuit to the calling station for a predetermined period in case the reperforator is disconnected from the line and means at the calling station responsive to said line interruption for indicating that the connected reperforator has been disconnected.

7. In a multi-station telegraph system, a main office or switching center and a plurality of other stations, telegraph lines or channels connecting said other stations to said main office, switching means at said main office for interconnecting said lines or channels, printers at said stations for effecting communication over said lines or channels, receiving devices including tape reperforators at said main office for storing message signals from the other stations, means to connect a tape reperforator temporarily to a line or channel when a call is initiated from the station on said line or channel, means responsive to a prolonged open line circuit for releasing the reperforator and means responsive thereto for opening the line circuit after the same has been reclosed to signal the calling station.

8. In a multi-station telegraph system, a main office and a plurality of branch stations, telegraph lines or channels from each of said branch stations to said main office, printers at said branch stations for effecting communication over said lines or channels, receiving apparatus at said main office, control equipment at each branch station including means for initiating the connection of said receiving apparatus at the main office to a calling branch station which desires to transmit a message, said control equipment including means at each branch station for opening the line circuit for a predetermined time at the end of the message or when disconnection is desired, means at the main office to disconnect the receiving apparatus in response to said opening of the line circuit, means for opening the line circuit for a different time at the main office upon such disconnection as a clear-out signal and means for restoring the equipment at the branch office to normal in response to said clear-out signal.

9. In a multi-station telegraph system, a main office and a plurality of branch stations, telegraph lines or channels from each of said branch stations to said main office, switching means at the main office for interconnecting said lines or channels, printers operatively associated with said lines or channels, signal storage units at the main office for printer signals from the branch stations, manually operable means at each branch station for initiating a call to the main office, means responsive thereto for connecting an idle signal storage unit to the calling branch office and means effective when no signals are received from the calling branch office for a predetermined period of time for automatically releasing the connected signal storage unit.

10. In a multi-station telegraph system, a main office and a plurality of branch stations, telegraph lines or channels from each of the branch stations to the main office, receiving means including tape reperforators at the main office means for connecting an idle reperforator to the line or channel from a calling branch station, manually operable means at said calling branch station for initiating disconnection at the end of transmission, means at the main office for thereupon transmitting a clear-out signal to said branch station and means at said last-mentioned station for restoring the equipment thereat to normal or idle condition in response to said clear-out signal.

11. In a multi-station telegraph system, telegraph lines or channels, a plurality of stations at which said lines or channels terminate, printers at said stations for effecting communication between stations over said lines or channels, each of said printers including means responsive to alternate rest or marking and spacing signals in permutation code in said lines or channels for controlling the printer, signal storage and repeating devices at one station also including means responsive to permutation code marking and spacing signals, means at said one station responsive to a momentary interruption of the rest condition of a line terminating thereat for seizing an idle signal storage device and connecting it to the calling line, means effective upon such connection to interrupt the rest condition of the calling line for a predetermined period of time at said one station and signaling means at the calling station responsive to said last-mentioned line interruption.

12. In a multi-station telegraph system, a main office or switching center and a plurality of other stations, telegraph lines or channels arranged for the transmission of signals thereover in one direction at a time connecting said other stations to said main office and having separate sending and receiving terminals in the main office, switching means at said main office for interconnecting said lines or channels, printers at said stations for effecting communication over said lines or channels, means at said main office for extending the receiving terminal of a first line to the sending terminal of a second line to permit transmission of signals from the branch station of said first line to the branch station of said second line and to prevent the transmission of message signals through the sending terminal of said first line, and means at the calling branch station to control said last-mentioned means.

13. In a multi-station telegraph system, a main station, a plurality of other stations, a first and a second line connecting a first one and a second one of said other stations with said main station, means for transmitting signals in either direction, one direction at a time over said first line, means for transmitting signals in either direction simultaneously over said second line, electronic timing means at said main office for generating selective control signals comprising timed line circuit interruptions of different lengths and means for transmitting said control signals over either of said lines.

14. In a multi-station telegraph system, a main office or switching center and a plurality of branch stations, telegraph lines or channels connecting said branch stations to said main

office, switching means at said main office for interconnecting said lines or channels, printers at said stations for effecting communication over said lines or channels, means at said main office for transmitting a control signal consisting of a circuit interruption of predetermined duration over said lines or channels and automatically operative means for temporarily stopping message transmission over said lines or channels while said control signal is being transmitted.

15. In combination, a main station or switching office, a branch telegraph station, a line or channel arranged for duplex operation between said main office and said branch station, means for transmitting printing telegraph signals from each station to the other station, means for transmitting a control signal consisting of a circuit interruption of predetermined duration from the main office to the branch station and automatically operative means for interrupting normal transmission of message signals from the main office to said branch station upon the initiation of said control signal.

GEORGE G. LIGHT.