Oct. 4, 1938. J. MELIO 2,131,917

ILLUMINATED STREET SIGN

Filed Feb. 17, 1938

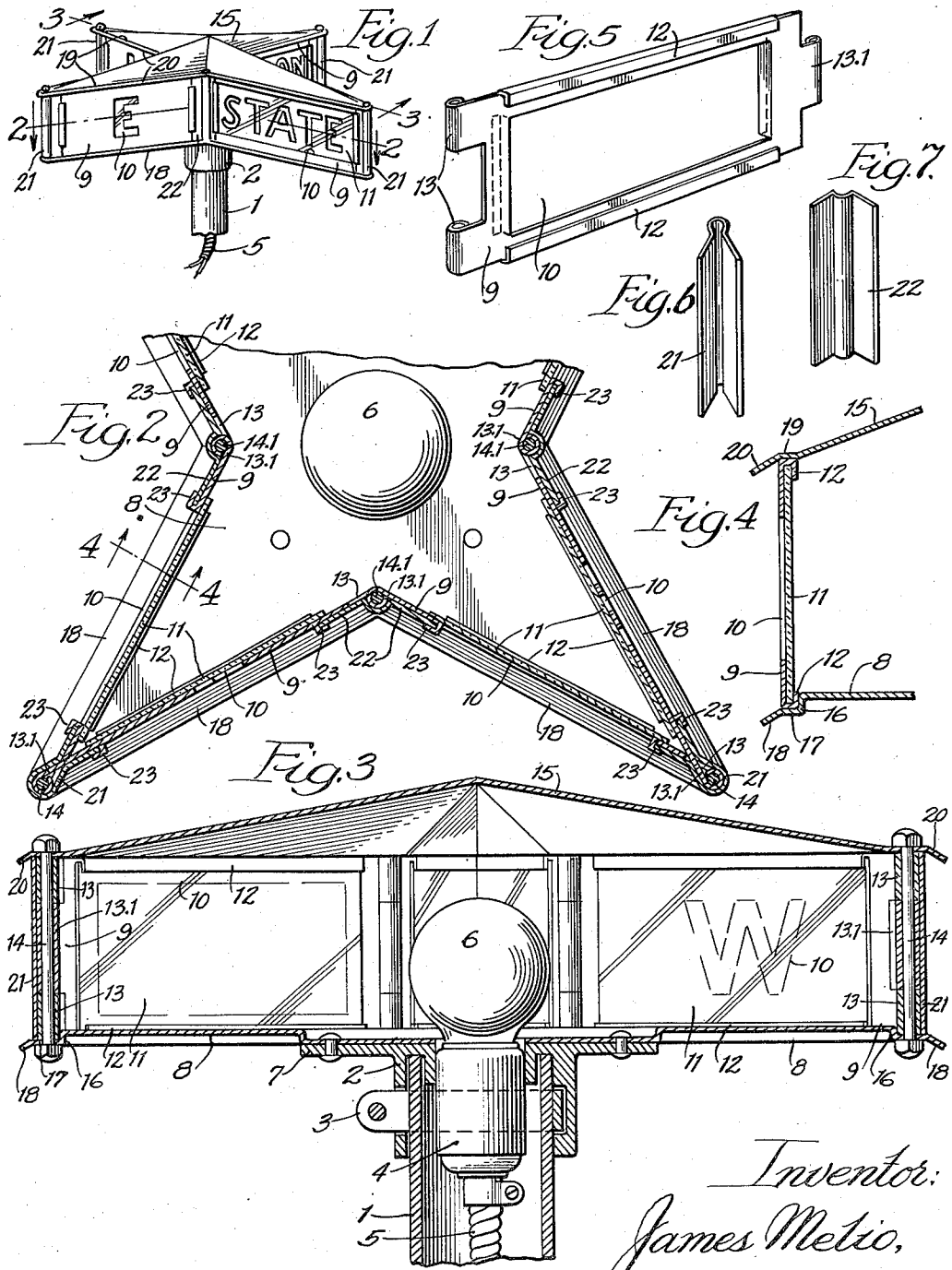

Inventor:
James Melio,

Witness
H. I. Seber P.

By Rummler Rummler & Woodworth,
Attorneys.

Patented Oct. 4, 1938 2,131,917

UNITED STATES PATENT OFFICE

2,131,917

ILLUMINATED STREET SIGN

James Melio, Chicago, Ill.

Application February 17, 1938, Serial No. 190,944

4 Claims. (Cl. 40—133)

This invention relates to illuminated signs, and particularly such as are appropriate for street-name signs.

The main objects of this invention are to provide an improved form of lantern construction, particularly designed for use in electrically lighted street-name signs; to provide a structure of this kind having an improved form of window panel frame that is readily demountable for replacement of broken panels; that is made of interchangeable parts and so formed as to exclude leakage of light from the interior at all points except the window panels; and to provide a lantern structure of this kind that is comparatively inexpensive to manufacture.

A specific embodiment of this invention is shown in the accompanying drawing in which:

Figure 1 is a perspective view of a street-name sign constructed according to this invention.

Fig. 2 is a fragmentary horizontal section taken on the line 2—2 of Fig. 1.

Fig. 3 is a vertical section taken on the line 3—3 of Fig. 1.

Fig. 4 is a fragmentary section taken on the line 4—4 of Fig. 2.

Fig. 5 is a perspective view illustrating the structure of the individual side panels.

Fig. 6 is a perspective view of the pilaster or closure strip which is applied to the outer extremities of a star-shaped sign.

Fig. 7 is a perspective view of the pilaster or cover strip that is applied at the joint between the inner ends of the side panels.

In the form shown in the drawing, the sign comprises a tubular post 1 having a fitting 2 clamped at its upper end by a strap 3 and appropriately arranged to support an incandescent lamp socket 4 connected by a cable 5 extending through the post to a source of electric current. A single lamp 6 serves to illuminate the entire sign. Mounted on a flange 7 on the fitting 2 is a bottom plate 8 which, in the form shown is substantially star-shaped in contour.

A series of side panels linked together as shown in Fig. 2 form the side walls of the lantern. Each of these panels comprises a body plate 9 having a window opening 10 behind which is mounted a glass panel 11. These plates have flanges 12 turned inward and backward upon themselves along the upper end lower edges of the plate to provide window grooves for supporting the glass panel 11. The side plates 9 are provided with a pair of wings 13 at one end and a single wing 13.1 at the other end, these wings being curled outward from the plane of the plate 9 to embrace hinge pins 14 and 14.1 respectively. All of the plates 9 are exactly alike and the wings 13 and 13.1 are so formed as to be complementary to each other so that these plates may be connected end to end in interchangeable relation. The window openings 10 may be rectangular, as shown at the right of Fig. 1, when the street name is painted on the face of the glass panel, or may, themselves be cut to the form of letters, as shown at the left of Fig. 1.

The top plate 15 has a marginal contour similar to that of the bottom plate, but is preferably a stamping that is bulged upward at the center so as to form good drainage for water at all points of its area. The margins of the bottom plate 8 are offset downwardly at 16 along the lines occupied by the plates 9, and then extend horizontally outward to provide a ledge 17 for the plate and a downwardly directed edge margin 18. The upper plate 15 has its margins offset to provide a rim 19 resting on the plates 9 and a downwardly bent edge margin 20. This offsetting of the top and bottom plates prevents the entrance of moisture, and also serves to close the joint against the escape of light.

In order to close the hinge joints at the ends of the side plates 9 against leakage of moisture and light, the curled wings 13 and 13.1 are covered by appropriately formed pilaster plates 21 and 22, which are slid axially over the curled ends of the connected plates 9, as will be seen in Fig. 2, and their vertical edges are seated in ways 23 formed as flanges extending outward from the vertical edges of the window openings in the panels 9. The bolts 14 and 14.1 serve both to connect the plates 9 in their hinged relation and to secure the top and bottom plates firmly against the edges of the side plates 9.

Although but one specific embodiment of the invention has been herein shown and described, it will be understood that details of the construction shown may be altered or omitted without departing from the spirit of this invention as defined by the following claims.

I claim:

1. A device of the class described, comprising a hollow sign of substantially star shape in horizontal contour, comprising a plurality of side panels hinged together in end to end zig-zag relation, top and bottom closure plates having marginal portions engaging said side panels, and hinge pins securing said side panels and closure plates together.

2. A device of the class described, comprising a hollow sign of substantially star shape in hori-

zontal contour, comprising a plurality of side panels hinged together in end to end zig-zag relation, each of said side panels comprising a plate having top and bottom flanges bent inward and over to provide window grooves and having end wings curled outward from the plane of the plate to embrace hinge pins, top and bottom closure plates having marginal portions engaging said side panels, and hinge pins securing said side panels and closure plates together.

3. A device of the class described, comprising a hollow sign of substantially star shape in horizontal contour, comprising a plurality of side panels hinged together in end to end zig-zag relation, each of said side panels comprising a plate having top and bottom flanges bent inward and over to provide window grooves and having end wings curled outward from the plane of the plate to embrace hinge pins, pilaster strips slidably embracing said curled wings to seal the joints between said plates, top and bottom closure plates having marginal portions engaging said side panels, and hinge pins securing said side panels and closure plates together.

4. A device of the class described, comprising a hollow sign of substantially star shape in horizontal contour, comprising a plurality of side panels hinged together in end to end zig-zag relation, each of said side panels comprising a plate having top and bottom flanges bent inward and over to provide window grooves and having end wings curled outward from the plane of the plate to embrace hinge pins, top and bottom closure plates having marginal portions engaging said side panels, said marginal portions being offset about the edges of said side plates for light and moisture exclusion, and hinge pins securing said side panels and closure plates together.

JAMES MELIO.