(12) UK Patent Application (19) GB (11) 2 043 982 A

(21) Application No **7937208**
(22) Date of filing **26 Oct 1979**
(30) Priority data
(31) **871956**
871690
(32) **27 Oct 1978**
31 Oct 1978
(33) **Belgium (BE)**
(43) Application published
8 Oct 1980
(51) **INT CL³**
G11B 27/10 15/00 23/30
23/38 // 5/02 5/45 27/34
(52) Domestic classification
G5R B12 B13 B264 B30X
B311 B321 B345 B346
B37Y B38Y B402 B421
B451 B452 B45X B472
B476 B482 B483 B602
B60X B682 B684 B687
B781 B788 B789 B83X
B86 B93A
B8M 682 684 685 687 C F
(56) Documents cited
GB 2004108A
GB 1440242
GB 1355277
GB 792942
GB 360725
(58) Field of search
B8M
G5R
(71) Applicants
Staar SA, Rue des Ateliers, 19—21 Brussels, Belgium
(72) Inventor
Theophiel Clement Joseph Lodewijk Staar
(74) Agents
Mewburn Ellis & Co.

(54) **Device for memorising the instantaneous position of a magnetic tape contained in a cassette**

(57) A device to memorise the instantaneous position of a cassette tape 3 comprises an electronic memory device 5 removable from the cassette recording and/or playback apparatus and preferably built into the cassette 2. The apparatus has means 12, 13, 14 for detecting the movement of the tape of an inserted cassette to generate a signal indicating its instantaneous position and a control 15 operating to update the memory 5 with their position signal each time the tape is stopped. On insertion of a memory-containing cassette 2 into the apparatus, control 15 reads the tape position in memory 5 into a display 16. Memory 5 may store tape positions corresponding to each "side" of the tape, detectors 57' (Figures 10, 11) sensing which "side" is in use. The cassette may have means to visually indicate that it has been inserted into apparatus not having a control for memory 5 and to erase data therein on such insertion (Figs. 5 to 9, 18 to 27). The apparatus may be microprocessor controlled and have a keyboard 72 (Fig. 12) allowing storage in selected addresses in memory 5 of (e.g. eighty) different tape positions which it may be desired to find again. A GOTO button causes the tape to be driven automatically to one of these stored positions selected by keyboard 72. Memory 5 can also store data indicating the length of tape and its bias and equalisation requirements, the apparatus having displays 62, 63, 64 for such data and the microprocessor responding thereto to automatically set the bias and equalisation.

FIG. 2

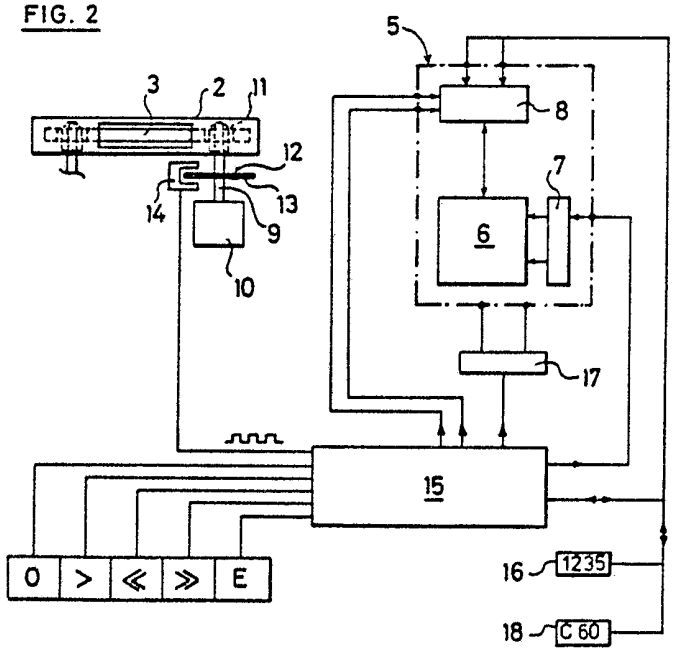

Certain of the drawings originally filed were informal and the print here reproduced is taken from a later filed formal copy.

The specification as originally filed included matter in a foreign language in certain of the drawings.

GB 2 043 982 A

FIG. 1

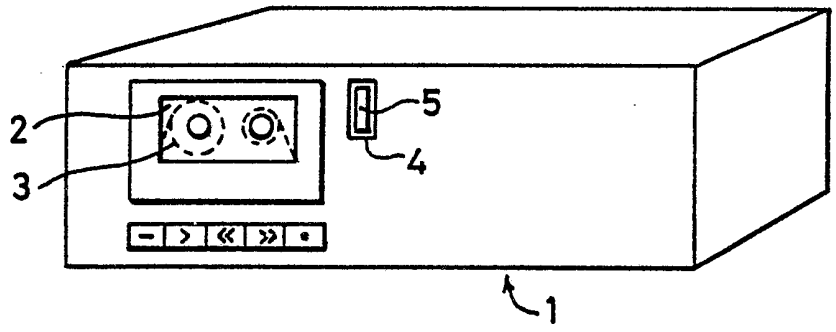

FIG. 2

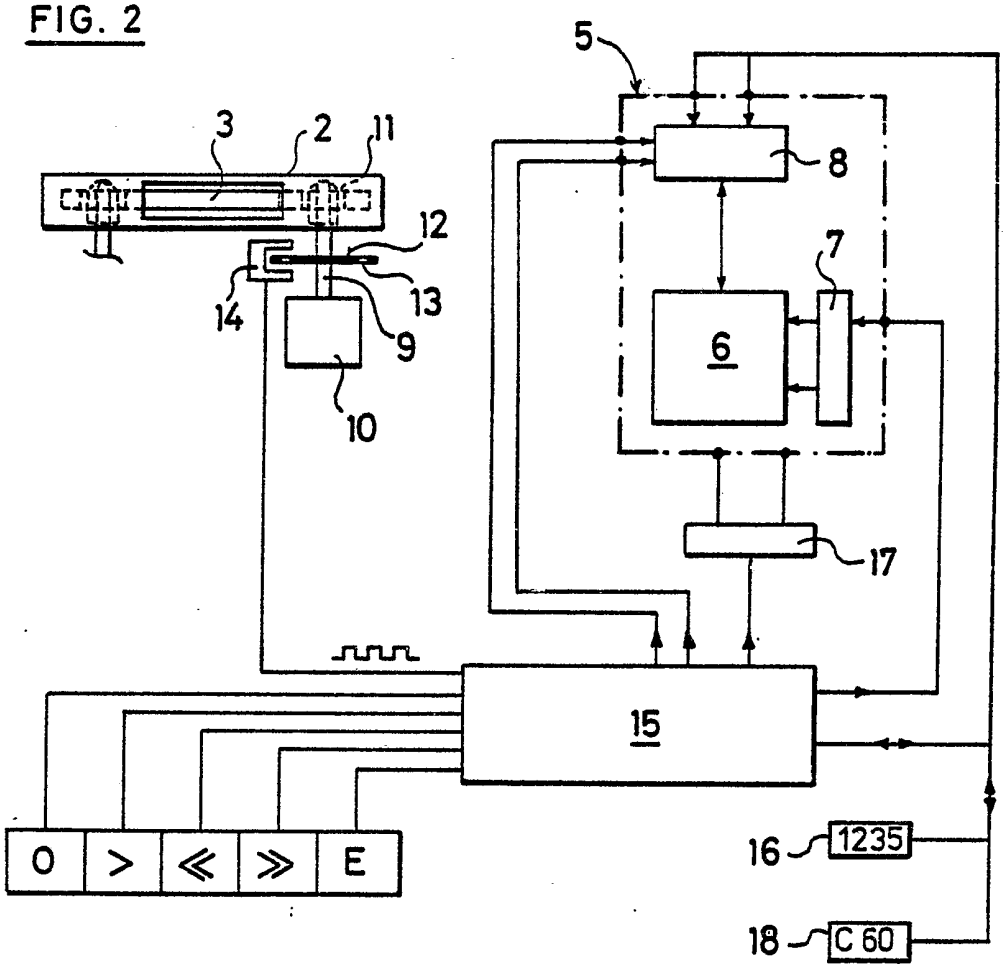

2043982

FIG. 3

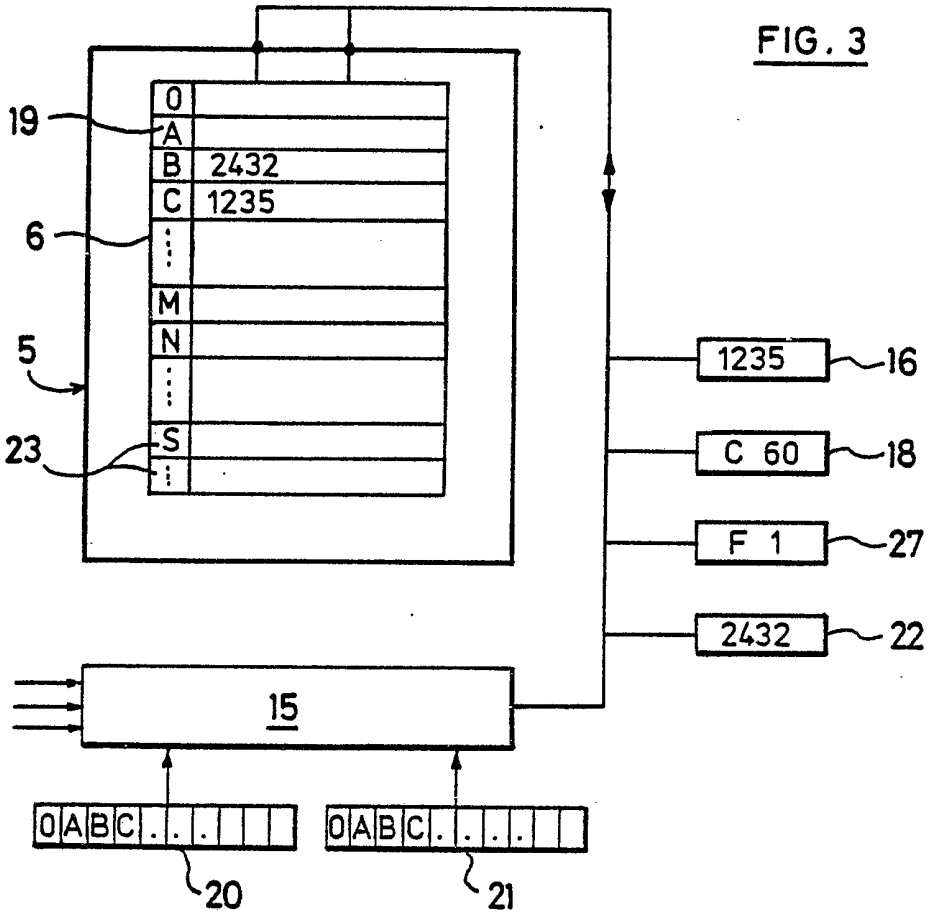

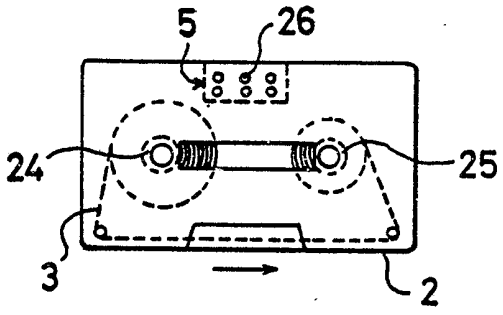

FIG. 4

2043982

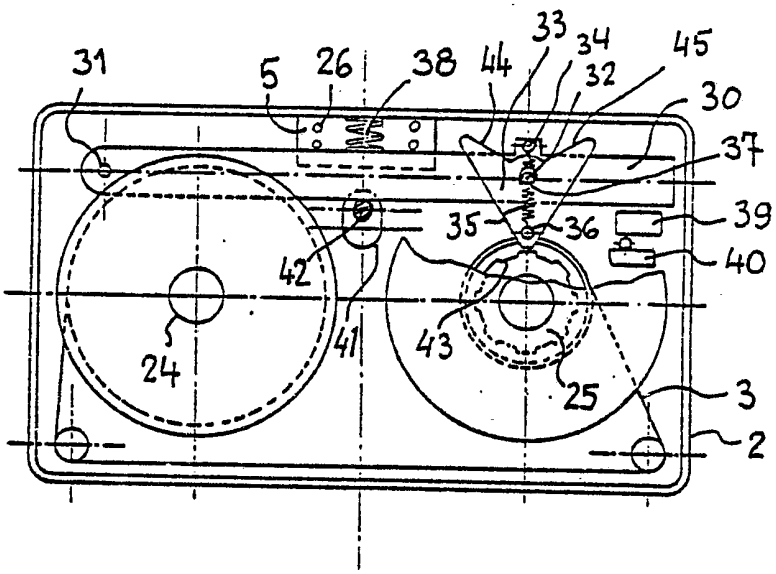

FIG.5

FIG.6

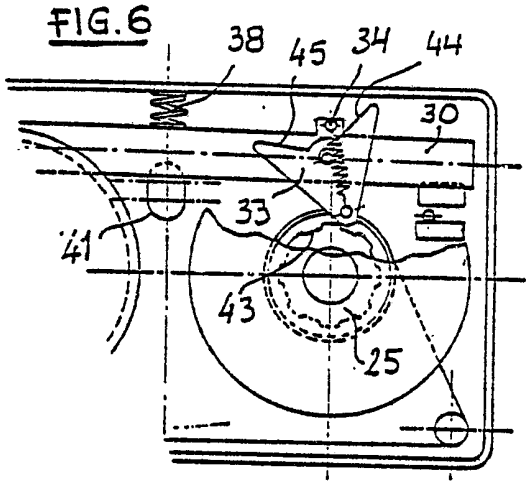

FIG.7

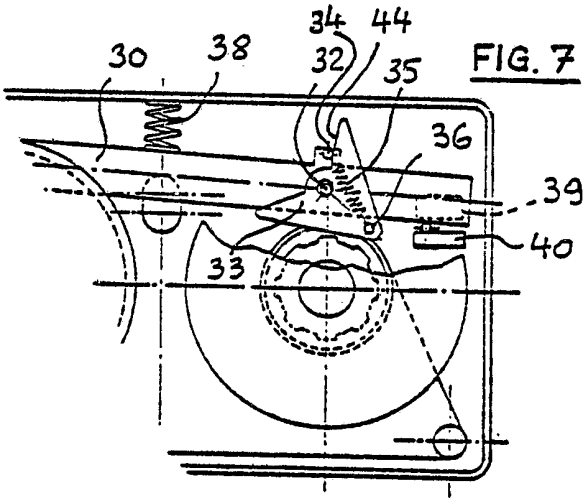

FIG.8

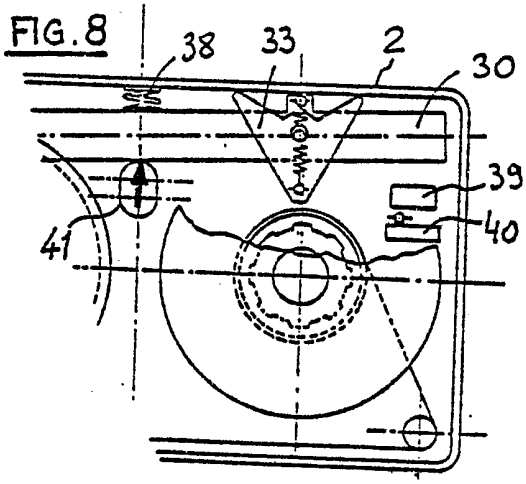

FIG.9

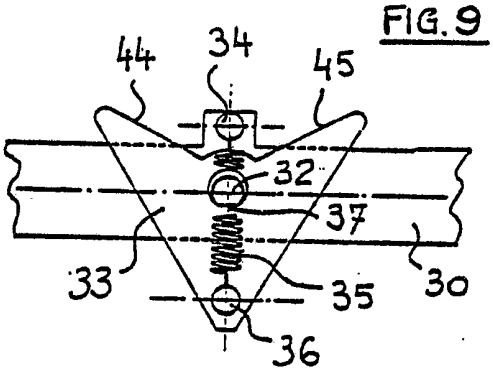

2043982

FIG.10

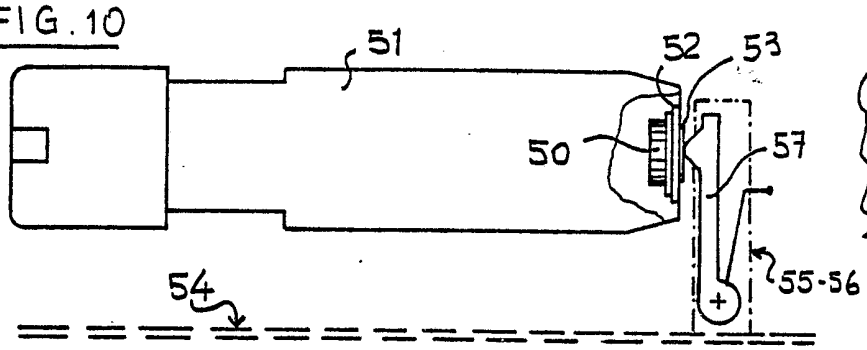

FIG.10A

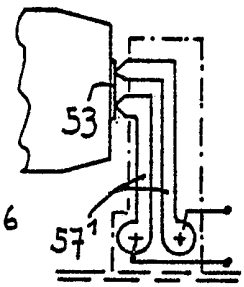

FIG.11

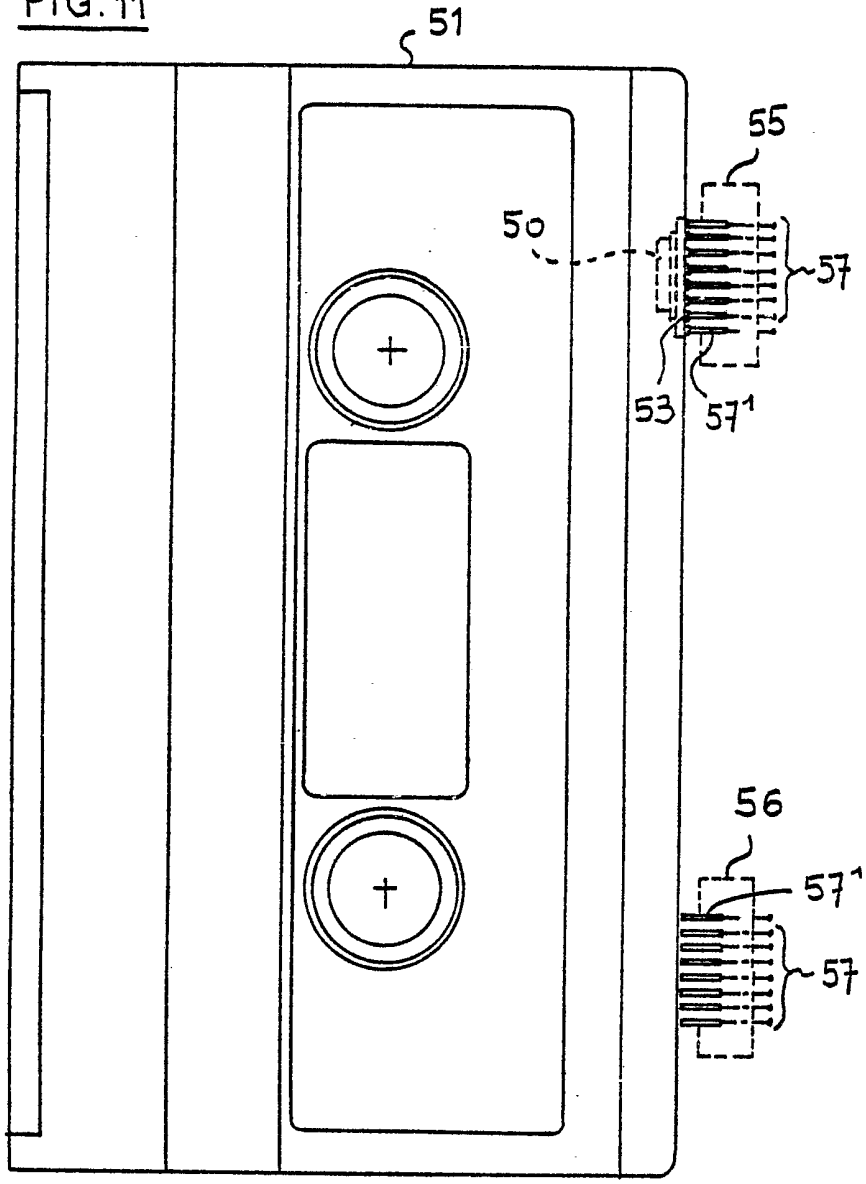

FIG.11A

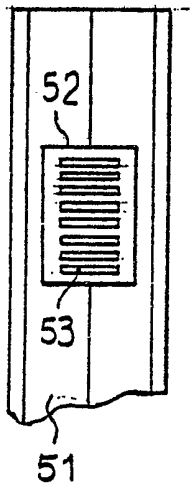

2043982

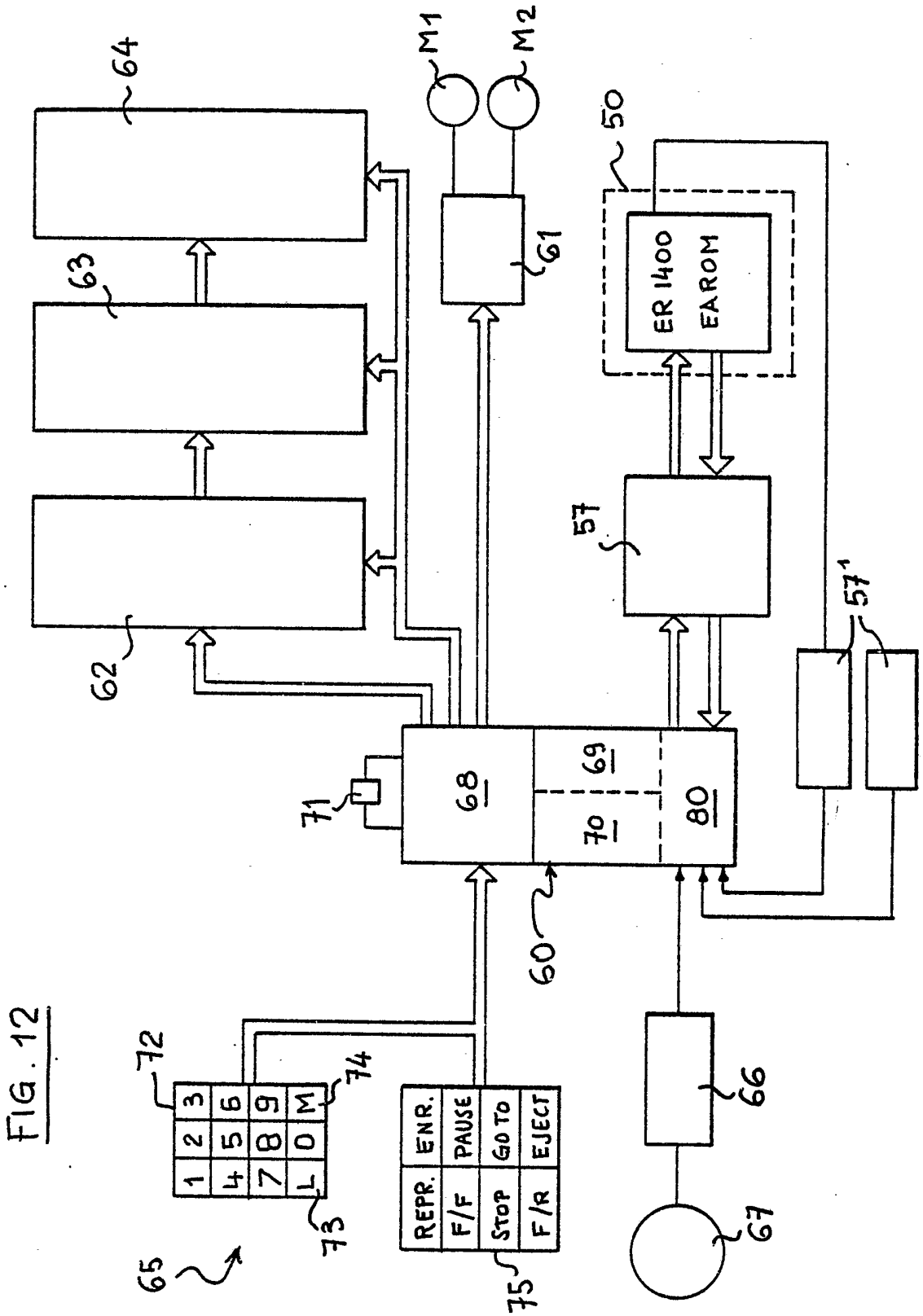

FIG. 12

2043982

FIG. 12 A

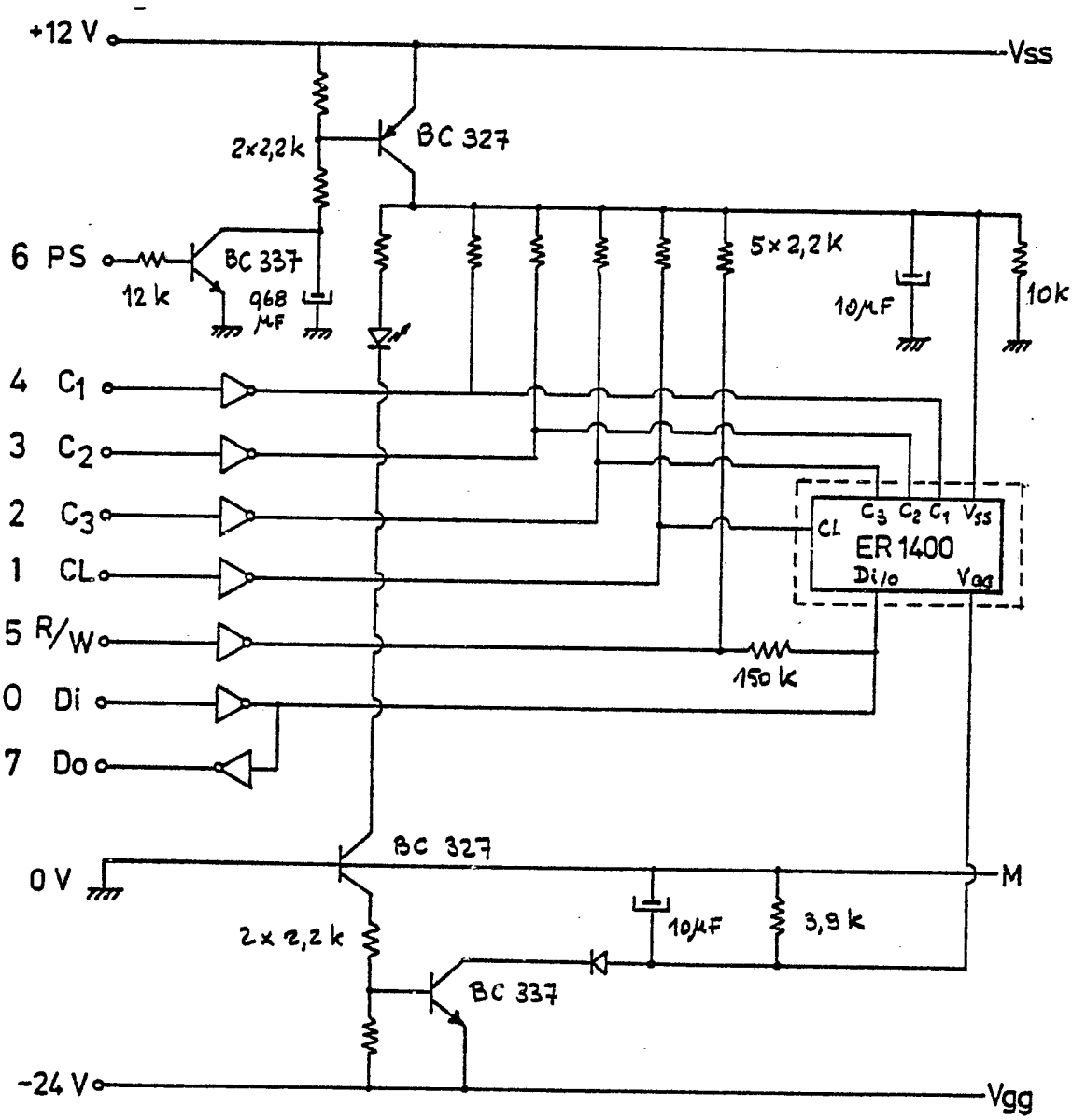

FIG. 13

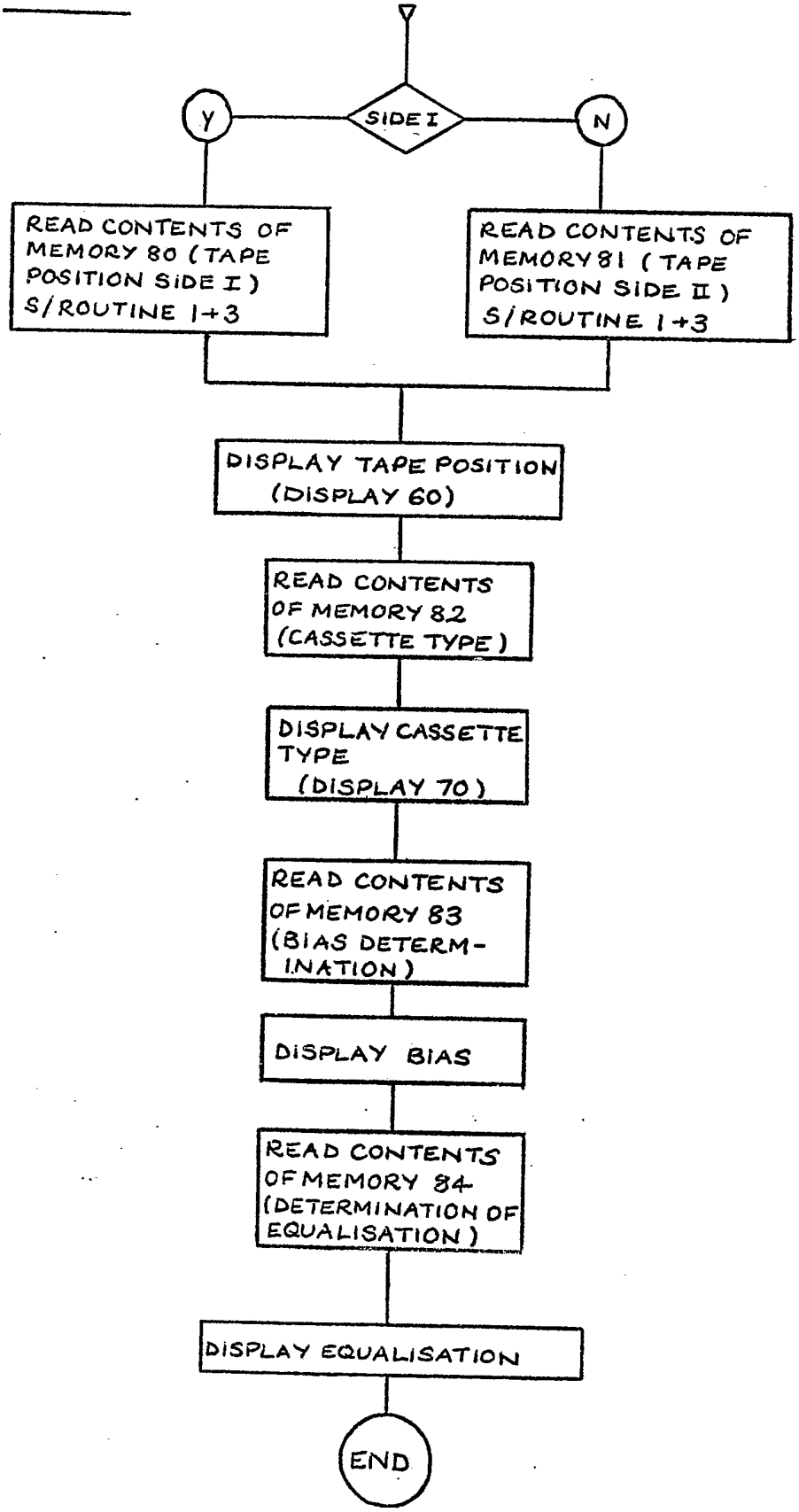
SIDE I
Y
N
READ CONTENTS OF MEMORY 80 (TAPE POSITION SIDE I) S/ROUTINE 1+3
READ CONTENTS OF MEMORY 81 (TAPE POSITION SIDE II) S/ROUTINE 1+3
DISPLAY TAPE POSITION (DISPLAY 60)
READ CONTENTS OF MEMORY 82 (CASSETTE TYPE)
DISPLAY CASSETTE TYPE (DISPLAY 70)
READ CONTENTS OF MEMORY 83 (BIAS DETERMINATION)
DISPLAY BIAS
READ CONTENTS OF MEMORY 84 (DETERMINATION OF EQUALISATION)
DISPLAY EQUALISATION
END

FIG. 14

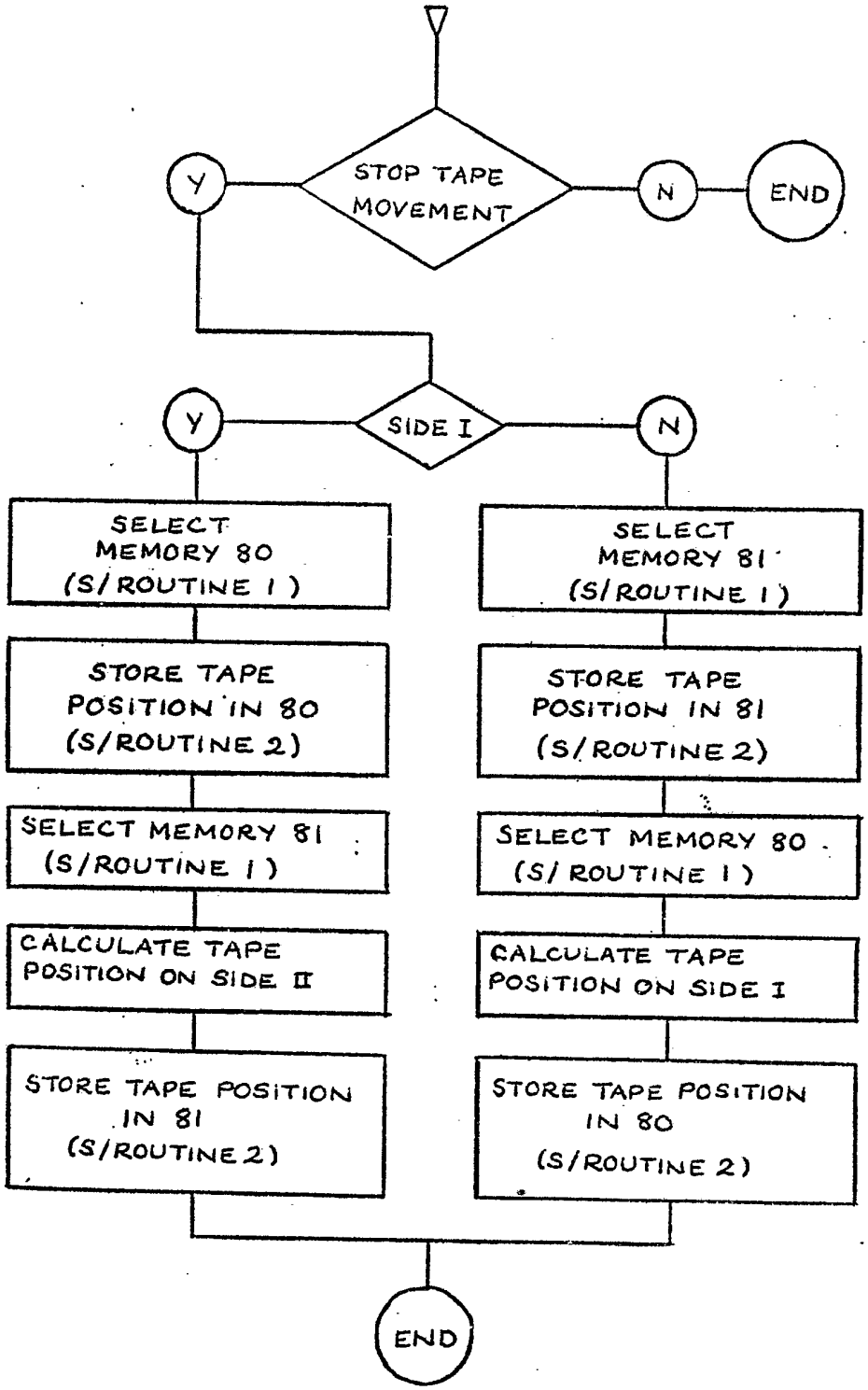
STOP TAPE MOVEMENT
Y
N
END
SIDE I
Y
N
SELECT MEMORY 80 (S/ROUTINE 1)
STORE TAPE POSITION IN 80 (S/ROUTINE 2)
SELECT MEMORY 81 (S/ROUTINE 1)
CALCULATE TAPE POSITION ON SIDE II
STORE TAPE POSITION IN 81 (S/ROUTINE 2)
SELECT MEMORY 81 (S/ROUTINE 1)
STORE TAPE POSITION IN 81 (S/ROUTINE 2)
SELECT MEMORY 80 (S/ROUTINE 1)
CALCULATE TAPE POSITION ON SIDE I
STORE TAPE POSITION IN 80 (S/ROUTINE 2)
END

FIG. 15

2043982

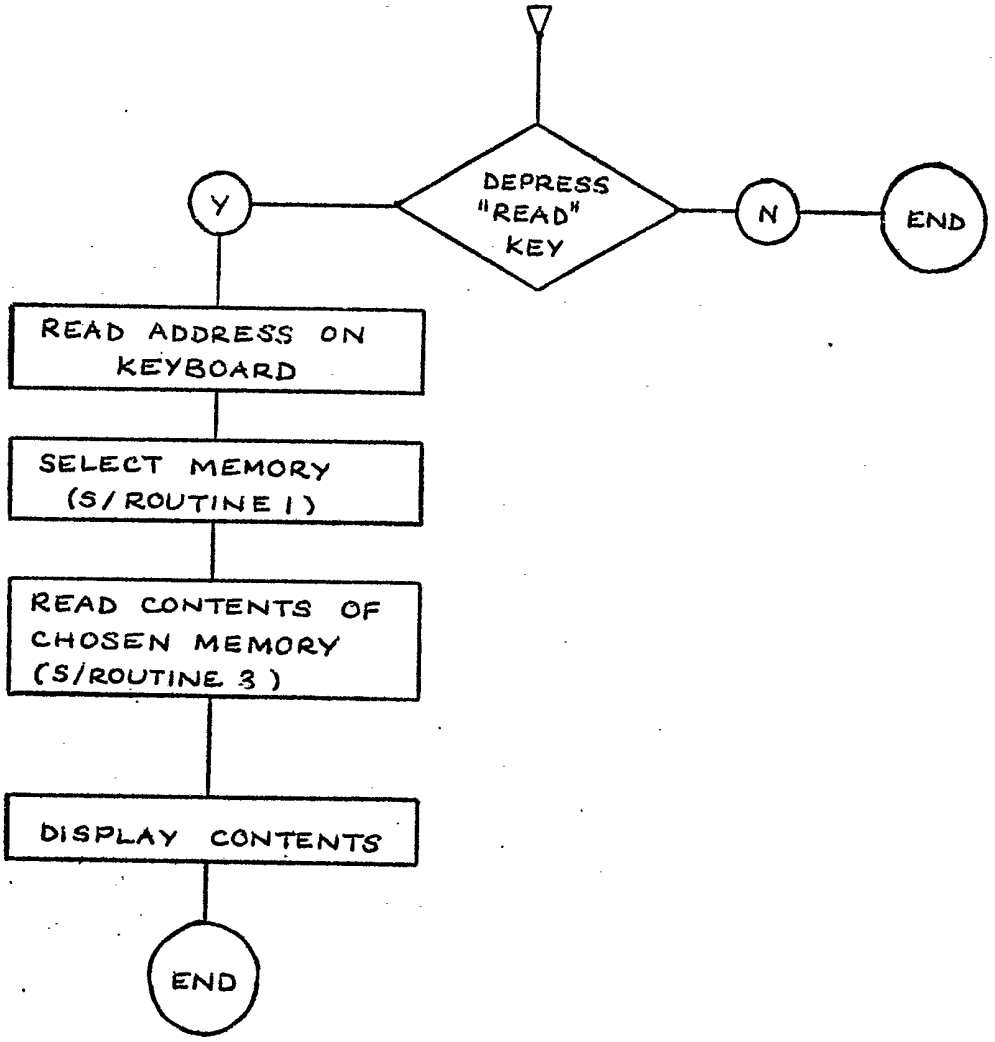

2043982

FIG. 16

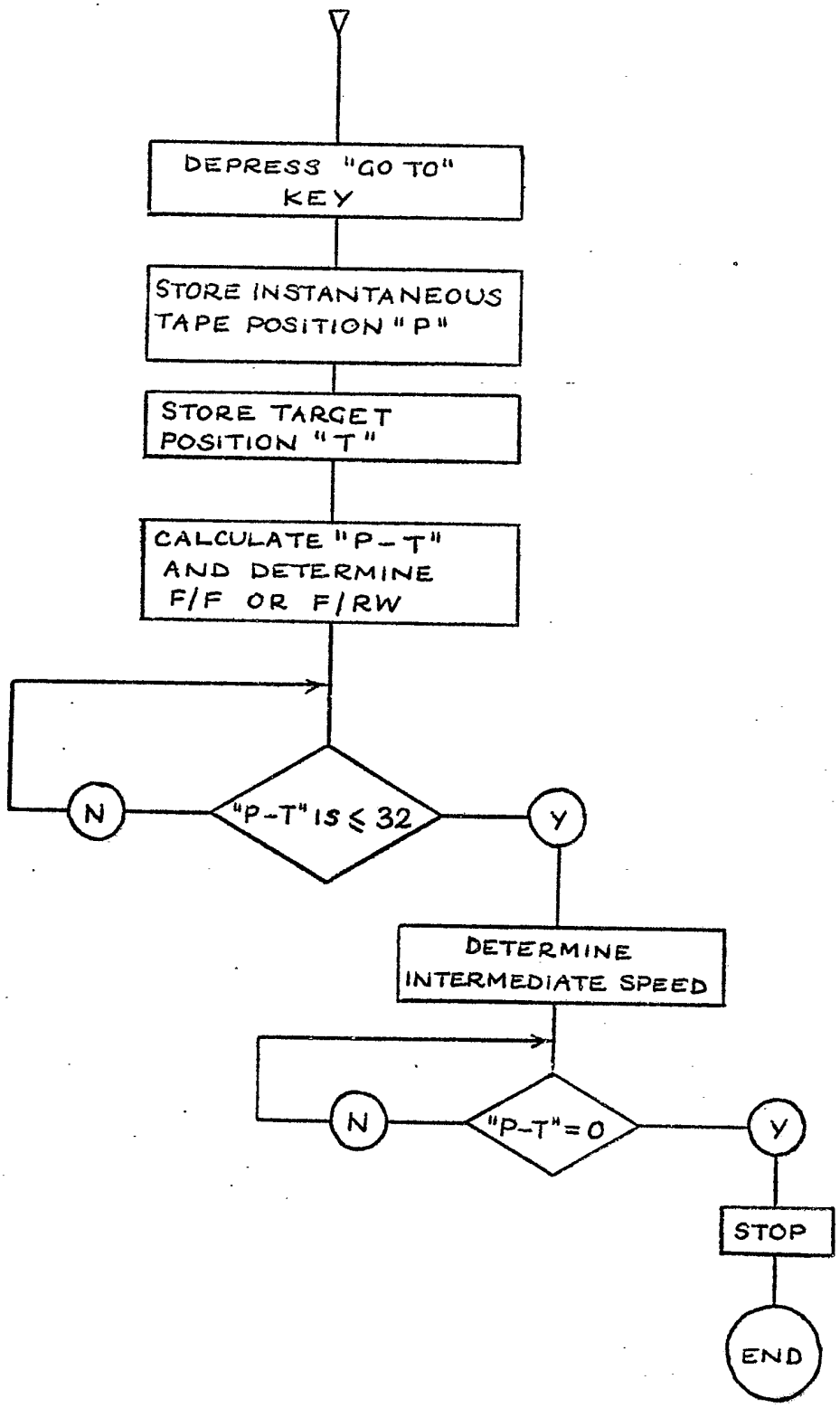

2043982

FIG. 17

Memory organisation

Memory	Contents	
0 ' ' ' ' 79	125 ' ' ' ' 3148	Tape positions stored by user
80	234	Instantaneous tape position side I
81	3050	idem. side II
82 83 84 ' ' 99	C 60 Bias Equalisation ' ' '	Pre-stored constants (numerical values)

Memory 80 — Automatic operations "READ" and "WRITE" performed only by the microprocessor

Memory 81

Memory 82
Memory '
Memory '
Memory '
Memory 99

constants pre-stored (for example by the cassette manufacturer) and the automatic operation "READ" alone carried out solely by the microprocessor upon insertion of the cassette into operative position

2043982

FIG.18

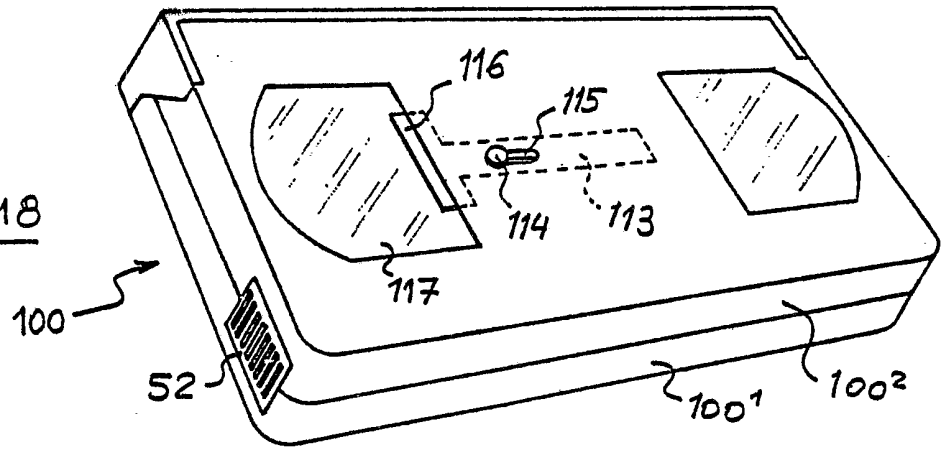

FIG.19

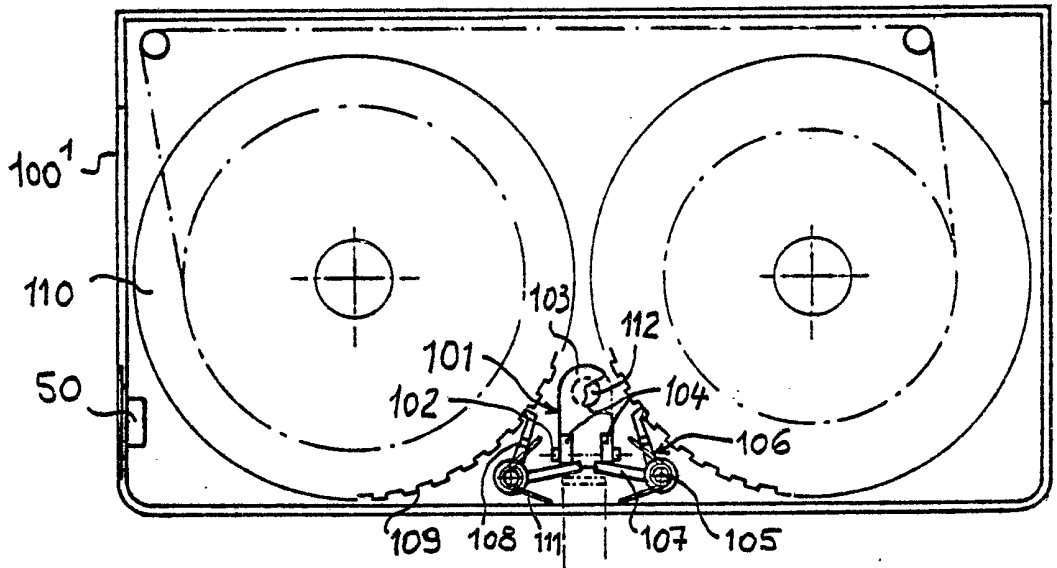

FIG.20

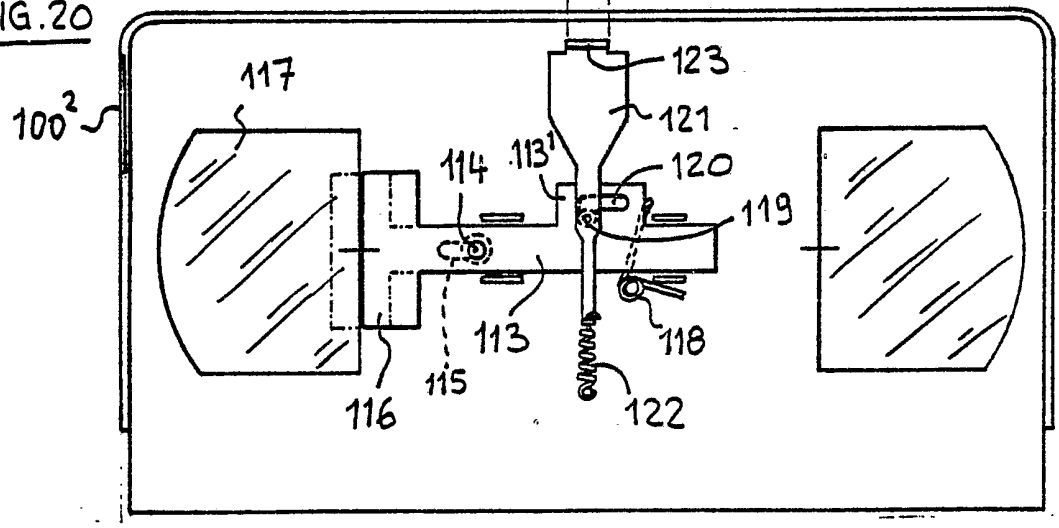

2043982

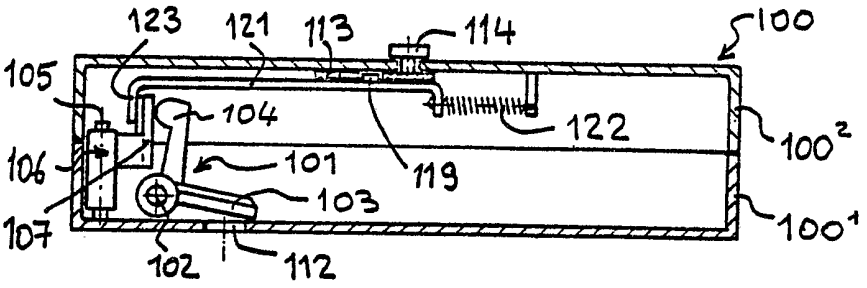

FIG. 21

FIG. 22

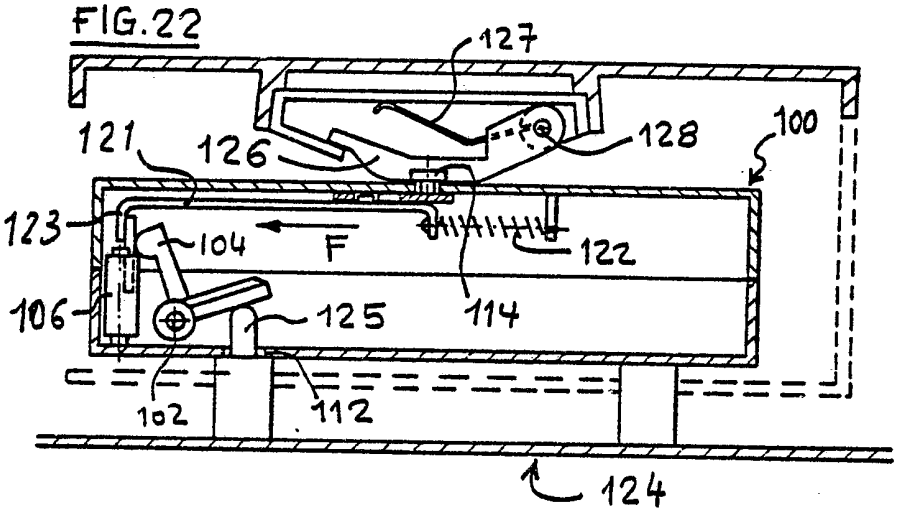

FIG. 22 A

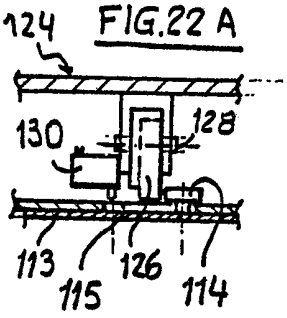

FIG. 23

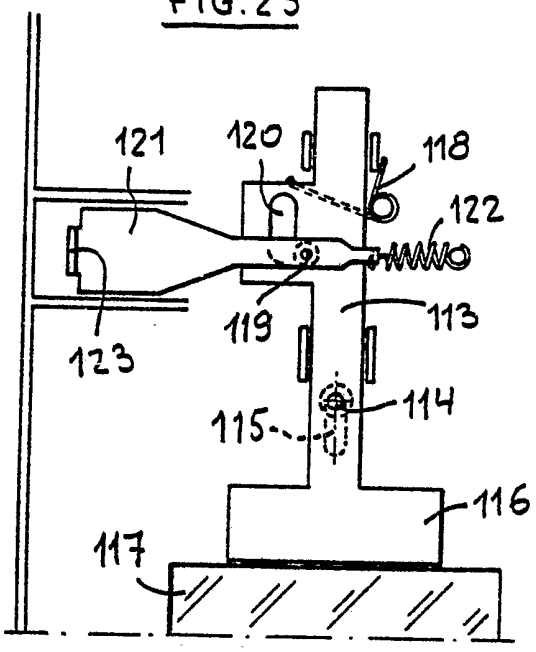

FIG. 24

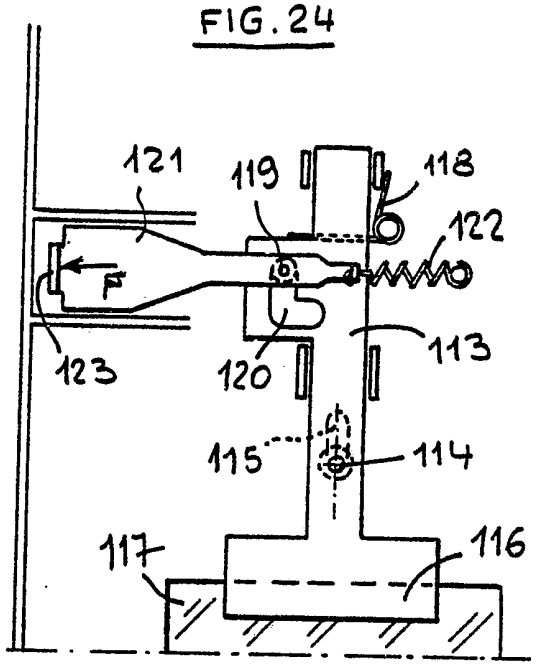

2043982

FIG.25

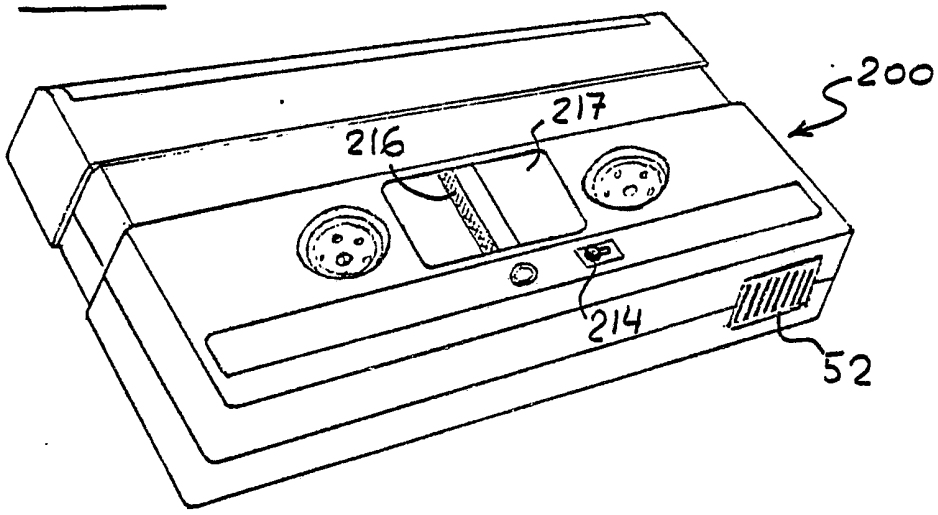

FIG.26

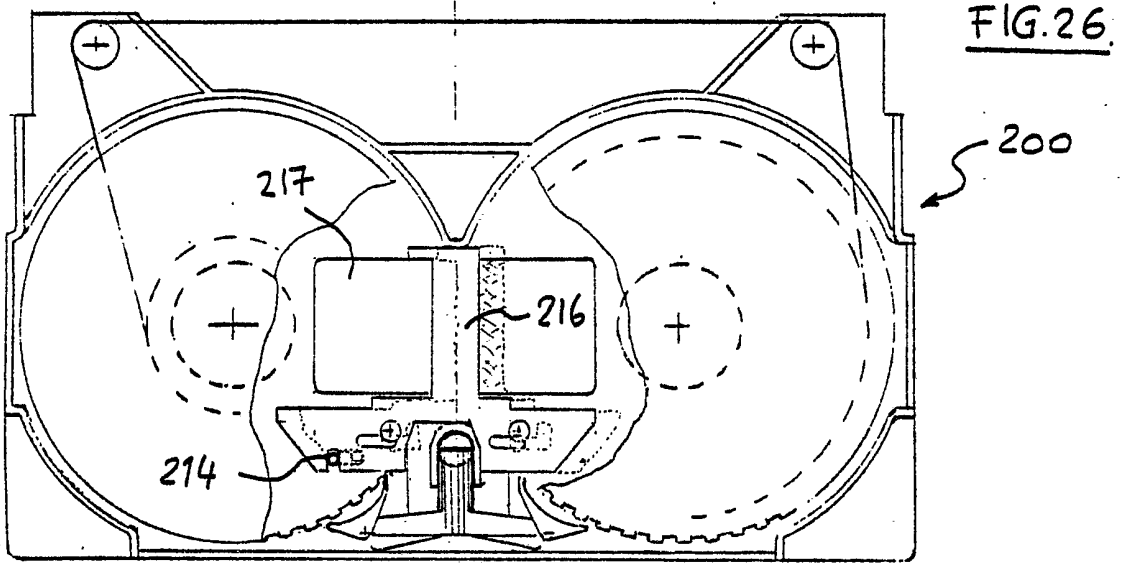

FIG.27

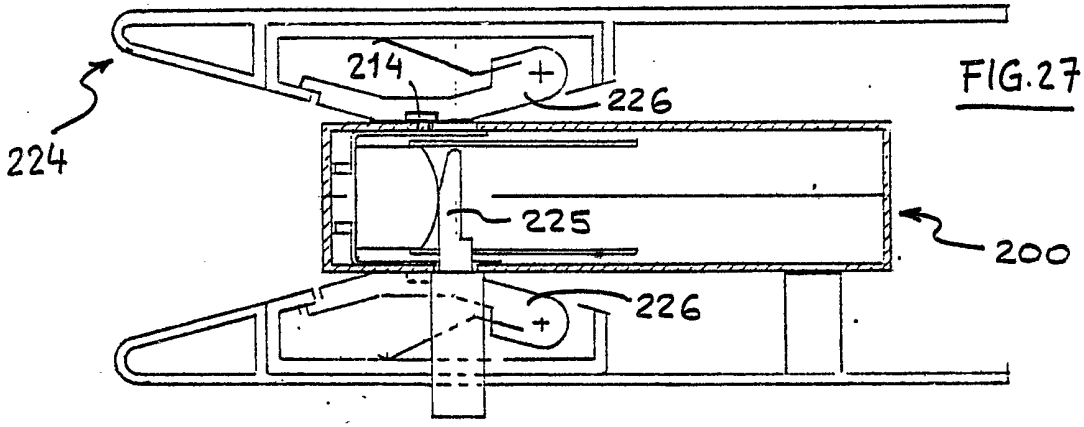

SPECIFICATION

Device for memorising the instantaneous position of a magnetic tape contained in a cassette.

The present invention relates to a device for memorising the instantaneous position of a magnetic tape contained in a cassette.

In view of their particular form, the cassettes may at every moment be withdrawn, introduced or reversed in the recording and reproduction units and this whatever may be the instantaneous position of the magnetic tape.

This easiness of use which has ensured their commercial success has nevertheless the disadvantage that the user never knows the position of the magnetic tape in relation to one of its ends, for example, in number of revolutions of one of the reels, when he reintroduces a cassette in a tape recorder.

To overcome this disadvantage the cassettes have been provided with transparent windows permitting direct observation of the thickness of the winding of the magnetic tape on one or the other of the reels; however this method of location is completely lacking in precision because of the extreme thinness of the tape.

It has also been proposed, in order to improve the precision of the location, to fit mechanical movement indicators in or on the cassettes, but their complexity and bulkiness are such that practically no cassette can contain them. Moreover as their precision remains unacceptable and their cost price is very high, these mechanical indicators have in practice never been produced.

The present invention has for its object to overcome these disadvantages, and to allow this memorisation to be achieved by simple, accurate means.

With this object in view the memorisation device comprising on the one hand a detector of the movement of the magnetic tape delivering a signal representative of the instantaneous position of the same and on the other hand an electronic memory circuit is characterised mainly in that with each cassette is associated an electronic memory circuit which is removable with respect to the tape recorder.

In a practical embodiment of the invention a receptacle is provided in the tape recorder into which a memory circuit associated with the cassette is introduced, this receptacle having contacts intended to receive pins of the memory circuit in order to ensure the functioning of the latter when it is in operative position.

Advantageously, the electronic memory circuit belonging to the cassette may be made integral with the same.

By means of the electronic memory circuit, information characterizing the cassette and/or the magnetic tape contained therein such as its type (C45, C60, C90, C120, etc.) its length, its magnetic bias value, etc. may be stored once and for all by means of the memory circuit.

According to one embodiment, means may be provided which ensure that in the case where a cassette made in accordance with the invention (with associated electronic memory circuit) is used on a tape recorder which does not contain the means necessary for the operation of the memory circuit, the content of the memory block representing the instantaneous position of the tape is erased.

Means may also be provided to make the user aware that the cassette has been introduced into a tape recorder not designed for a cassette in accordance with the invention.

Other features and characteristics of the invention will become evident from the embodiments described in the following by way of example, with reference to the figures, wherein:

Figure 1 shows a tape recorder containing a cassette and the associated memory circuit;

Figure 2 shows an embodiment of the invention;

Figure 3 shows a memory of a greater capacity than that shown in Figure 2;

Figure 4 shows a type of cassette where the memory circuit is accommodated inside the cassette itself,

Figures 5 to 8 relate to an embodiment wherein a cassette according to the invention is used on a tape recorder which does not comprise the means necessary for the operation of the memory circuit.

These figures 5 to 8 each show diagrammatically a cassette provided with the device in different positions of operation.

Figure 9 shows a detail.

Figures 10, 10A, 11, 11A are schematic views illustrating the connections between a cassette having electronic memory means with the terminals of a recording and reproducing unit.

Figure 12 is a schematic view of circuits included in the recording and reproducing apparatus illustrating a microprocessor based controller means and connections to an electronic memory means of a cassette.

Figure 12A is a diagrammatic view of an interface circuit required for driving the memory means of the cassette shown in Figures 10 and 11.

Figures 13 to 17 are explanatory diagrams.

Figures 18 to 23 relate to a form of embodiment in which means are provided to monitoring the user that a cassette has been inserted in a recorder or display apparatus which is not adapted for a cassette according to the invention, more particularly in its application to a cassette of the VIDEO type composed of two half cases.

Figure 18 is perspective view of a cassette to which the device has been applied.

Figure 19 is a plan view showing the mechanism in the upper half case.

Figure 20 is a plan view showing the mechanism in the lower half case.

Figure 21 is a vertical cross sectional view showing the cooperation between the mechanisms provided in the upper and lower half cases.

Figure 22 is a cross sectional view showing the cooperation of the recording or display apparatus with a cassette.

Figure 22A is a view of detail.

Figures 23 and 24 show the working of the devices according to figures 10 and 20.

Figures 25, 26, 27 show the application of the invention to a cassette of the reversible type, figure 25 being a perspective view of such cassette and figures 26—27 representing the mechanism.

In Figure 1 a cassette tape recorder 1 is shown diagrammatically comprising a mechanism intended to receive the cassette 2 and the achieve the movement of the magnetic tape 3.

In accordance with the invention, a receptacle 4 is provided into which a memory circuit 5 associated with the cassette 2 is introduced.

This receptacle 4 possesses contacts intended to receive pins of the memory circuit so as to achieve the functioning when the latter is in operative position.

Figure 2 shows an embodiment of the invention.

In this figure details of the memory circuit 5 are shown comprising an actual memory portion 6, a decoding circuit 7, a data input and output device 8.

These different elements which belong to the memory form part of the same circuit; as they are well known in themselves they will not be described or illustrated in detail.

For the determination or detection of the tape position various means may be proposed without exceeding the scope of the invention.

It is possible, for example, to use for the detection a device such as that described in the Belgian patent No. 855.968 of the applicant.

In the present case in order to simplify the description of the circuit use will be made of a device mounted on the driving spindle of the take-up reel.

In figure 2, numeral 2 designates the cassette, 3 the magnetic tape, 9 the spindle and 10 the motor driving the take-up reel 11.

On the spindle 9 of the take-up reel a disc 12 is fixed which is provided with holes 13 and with which co-operates a photo-electric detector 14.

When the magnetic tape 3 is driven, the spindle 9 of the take-up reel rotates and drives the disc 12 which chops the light rays from the detector 14 and this delivers pulses representative of the instantaneous position of the tape 3.

The representative signal deriving from the detector 14 of the position of the magnetic tape is applied to the input of a control circuit 15.

This control circuit 15 receives information relating to the cassette (insertion, ejection) and to the movement of the magnetic tape (stop (O) — play (>) — fast forward, fast rewind (» or «).

Through its outputs the circuit 15 controls the data reading and recording phases in the memory circuit 5 as well as the display of the position of the magnetic tape through a digital or analogue device 16.

When a cassette 2 and its memory circuit 5 are in an operative position, the control circuit 15 ensures first the connection of the memory circuit 5 to the power supply block 17 and then the reading of the position of the tape contained in the memory component 6 of the memory circuit 5. This position is then transmitted to the display device 16; the user is thus immediately informed on the position of the tape in relation to one of its ends.

When the magnetic tape 3 is driven, the spindle 9 of the take-up reel is rotated and the disc 12 is driven.

As explained previously, the disc 12 chops the light rays from the detector 14, thus delivering pulses representative of the instantaneous position of the tape 3.

These pulses are transmitted to the display 16 through the intermediate of the control circuit 15; this gives rise to an addition or a subtraction of these pulses in respect of the value displayed as a function of the sense of movement of the tape.

As soon as the movement of the magnetic tape 3 is interrupted, the circuit 15 controls the memorisation of the instantaneous position of the tape, that is to say, the recording in the memory 6 of the value displayed by the display device 16.

To this end, the circuit 15 transmits the value displayed by the device 16 onto the input of the memory circuit 5 and ensures recording thereof in the memory 6.

Because of this, if the cassette 2 and its memory circuit 5 are withdrawn from the unit, the instantaneous position of the tape at the moment of withdrawal is memorised (at 6) in the circuit 5.

This memorisation may likewise be carried out in a periodic manner or just before the cassette 2 and its memory circuit 5 are withdrawn from the tape recorder 1.

It may also be considered to memorise in addition to the position of the tape, once and for all, in the circuit 5, characteristics relating to the magnetic tape itself, such as its type (C45, C60, C90, C120, etc.), its length, the value of its magnetic bias.

When the cassette 2 and its memory circuit 5 are in operative position, the control circuit 15 also ensures the reading of these characteristics which are then transmitted either to tuning circuits or to analogue or digital display devices 18.

Figure 3 illustrates another advantageous embodiment of the present invention by making use of a circuit similar to that of figure 2, but with the use of a memory 6 of larger capacity.

In order to simplify, only the elements necessary for the description of the utilization of this larger memory have been represented in this figure; the control and display circuits remain identical with those of figure 2.

The memory component 6 of the circuit 5 comprises several memory blocks which are represented in a simplified manner by blocks 19 designated A, B. These different memory blocks allow the user to memorise several positions of

the magnetic tape which he is desirous to find again without having to note these positions.

To this end a keyboard 20 with selector keys is provided which is connected to the control circuit 15 and which when it is operated achieves the recording of the instantaneous position of the tape displayed by the device 16 in the memory block selected (position C). A second keyboard 21 also connected to the control circuit 15 enables, when actuated, the reading of the content of the preselected memory block (B in the present case) and the transmission of this content to the display device 22, in such a manner that the position of the tape which has been memorised can be read.

Several blocks 23 are used for storing in a definitive manner any characteristics relating to the cassette and to the magnetic tape.

According to another embodiment (figure 4) the electronic memory circuit associated with the cassette is made integral with the same, which facilitates the operations of introduction and ejection of cassettes and of their associated memory circuits.

Figure 4 shows a tape recorder cassette wherein the case 2 of the cassette comprises openings on parts of its sides which allow driving elements integral with the tape recorder to achieve the transport of the magnetic tape 3 from a take off reel 24 to a take-up reel 25 as well as its recording and its playback.

The electronic circuit 5 which achieves the storage or memorization of the position of the tape is accommodated inside the case 2 of the cassette. It comprises pins 26 necessary for its operation (power supply, transmission of data, etc.), which pass through the case in order to make contact with corresponding elements integral with the tape recorder into which the cassette has been inserted. The introduction of a cassette into the tape recorder then ensures also that the memory circuit 5 is put into operation.

When the cassettes of magnetic tape comprise two sides which are both usable for signal recording and reproduction operations, rather than providing a memory circuit for each of the sides, a single memory circuit is used which is rendered operative whatever the position of insertion of the cassette and which memorises the position of the magnetic tape in relation to its ends for each of the sides (either by difference or by complement of one side to the other).

The detection of the side of the cassette which is in operative position is achieved, for example, with the help of a mechanical or electronic element which via the control circuit 15 ensures the selection in the memory circuit 5 of the instantaneous position of the magnetic tape corresponding to the operative side F_1 of the cassette (indicated at 27) (figure 3).

The memory circuits 5 used in the present invention are preferably of the static type, since, in this case, they require no energy for preserving the content of their memory blocks. This circumstance is very advantageous in the case where the memory circuits are integral with the cassette and are mounted inside the same.

Experience has shown that for the memory circuit 5, it is advantageous to use the memory circuit known as ER 1400 EAROM of General Instrument Corporation Microelectronics, 600 West John Street, Hicksville, New York 11802.

Said circuit is described in the technical data and diagrams found in the following printed publications:

— APPLICATION NOTE (Bulletin 1207)
Microprocessor Interfaces to the ER 1400 EAROM

— MICRO ELECTRONICS (Bulletin: "Memories")
Electrically Alterable Read Only Memories.

Such advantageous use results from the following characteristics: it is a memory circuit of the static type (see hereabove) its size is that of a transistor — it keeps the informations registered for 10 years unpowered.

The memory circuit ER 1400 EAROM has only seven contact pins which is also an advantage.

Figure 10—10A show the cooperation of the memory circuit between the cassette and the display apparatus.

As shown in these figures of drawings, the memory ER 1400 EAROM (reference 50) is mounted within the cassette 51 and is in connection with a printed circuit 52 comprising eight vertical contact bars 53 which are located outside the front face of the cassette 51.

The arrangement is made assymetrical in order to allow an easy detection of the operative side of the cassette.

The main frame 54 of the tape-recorder on which the cassette is set in its operative position incorporates two connectors 55—56 provided with blades 57 foreseen for contacting the eight vertical bars 53.

The eighth blade 57^1 of both connectors is made in two parts to detect which side of the cassette is operative as described hereinafter.

Both connectors are wired to the interface of the microprocessor so that:

— power is supplied to the ER 1400 EAROM
— control of the memory can be performed when the cassette is in its operative position.

A standard Motorola 6800 microprocessor was selected for driving the tape-recorder and the ER 1400 EAROM.

A schematic diagram of the interface needed in connection with the ER 1400 EAROM is described in the "Application Note" of General Instrument.

The software engineered for the control of the ER 1400 EAROM is simple and just comprises three subroutines:

s/routine 1: address in, known as "address in"
s/routine 2: data in and erase; hereafter called "data in"
s/routine 3: data out, known as "data out".

Those subroutines are developed according to the technical specifications relating to the above cited ER 1400 EAROM.

The 6800 microprocessor controls also the tape-recorder, the displays and reads the drive

keys.

The system (figure 12) includes a controller 60, a motor control circuit 61 for the drive of the motors M1 and M2, displays 62—63—64 for visually displaying the tape position, the type of the cassette and the side of the cassette being in use, indications for bias and equalization settings, operator panels 65, 75 having keyboards and control switches and reel speed detector shown as a pulse generator 66 mounted on the take-up reel 67 supplying information on tape movement to the controller 60.

In a preferred embodiment, the controller 60 comprises a microprocessor 68, an examplary one being the Motorola 6800 which includes a central processing unit (CPU unit), circuits (80), external memories 69—70 called ROM (read only memory) and RAM (random access memory) as well as a time basis circuit 71 driven by a 4 MHz crystal and delivering 2 MHz signals.

The keyboard 72 enables the user to select an address in the memory by depressing corresponding keys and either to read the content of said address by depressing the "READ" memory control 73 or to memorize the tape position displayed by the display 62 at said address by depressing the "WRITE" memory control key 74.

The function keys 75 enable the user to operate the tape-recorder and inform the controller 60 on the tape travel sense (forward-rewind) as well as on the cassette position (eject).

The take-up reel 67 incorporates a pulse generator 66 mounted on its shaft and constructed so as to provide pulses at a rate representing the tape movement, in a preferred embodiment 16 pulses are delivered per reel revolution.

As cassettes are very often inserted or ejected, in order to avoid noticeable accumulative discrepancies; a large number of pulses per revolution is preferred.

The tape recorder includes drive motors M1 and M2 for the reels of the cassette which are controlled by a motor control circuit 61 which in turn is controlled by the controller 60.

Practically the motors M1 and M2 drive the tape at normal speed (play or record mode) at fast speed (forward, rewind), as well as at intermediate speed.

The controller unit 60 drives through its output lines the displays used for displaying the tape position (display 62), the type of cassette used in the tape-recorder, the side (I or II) being operative (display 63) as well as some characteristics of the tape being used which automatically set bias and equalization constants (display 64). These characteristics can be transmitted to the appropriate electronic circuits so that their tuning takes place automatically. Sets of diodes also are provided for indicating the functions carried out by the controller 60 such as play, record, stop, pause, . . .

Figure 12 also shows the memory circuit ER 1400 EAROM (reference 50) as well as the connectors 57 (blades 1 to 7) and the connectors 57^1 (blade 8).

Figure 12A shows a particular example of interface circuit needed for the memory ER 1400 and developed according to Figure 4 of General Instrument's "Application Note" mentioned hereabove.

OPERATION

When a cassette 51 is set in operative position in the tape recorder 54, its set of contact bars 53 corresponding to the ER 1400 EAROM are connected either to the right connector 55 or to the left one 56.

As the ER 1400 requires only seven connections the eighth contact of the plate 52 is used for selecting side I or II.

In fact both blades 57^1 of the connectors 55 and 56 located on the main frame 54 of the tape-recorder include two pins.

If the cassette is inserted with its set of contacts 53 on the right hand side (see fig. 11), the contact 57^1 of the right hand side connector 55 will close a circuit as both pins are applied to the same conductive bar of the set of contacts 53.

But the contact 57^1 of the left hand side connector 56 will remain opened.

Thus, the side of the cassette being in operative position is determined and known by the microprocessor which will immediately drive the memory (sub-routines: address in, data out) for displaying the present tape position, the type of cassette . . . according to the block diagram fig. 13.

Upon reading of these memorized data, which takes place immediately after the cassette has been set into operative position, the CPU provides for displaying on the display device the address of the last memorized information so as to prevent the user from selecting an address already used for memorizing a new reference there.

If a function key 75 is depressed (PLAY, F/F, F/R, RECORD) the microprocessor, according to the tape travel direction will either increment or decrement the tape position display unit by unit every time a pulse is delivered by the take-up reel. Thus, the tape position is permanently known with an accuracy of 1/16th of a reel revolution in the present embodiment.

As soon as the movement of the magnetic tape is interrupted, the microprocessor will always ensure first of all that the present tape position which is displayed (at 62) is memorized in the cassette's ER 1400 EAROM.

This is achieved by the subroutines address IN, data IN according to block diagram (figure 14). In this way the present tape position is always memorized *before* the cassette is removed or the power supply switched off.

When both sides of a same cassette are usable and the cassette has been played, it is appropriate not only to memorize the position of the tape with respect to the side used but also to update the position of the tape with respect to the other face.

The keyboard 72 includes two control keys: "READ" (73), "WRITE" (74) which allow the user

to drive the ER 1400 memory while the keys labeled "0" to "9" allow him to select an address (1 to 79) in said memory.

Depression of the "READ" key will set the "Read" mode of operation which will read the address selected by the user; then set subroutines address IN, data OUT for displaying the content of corresponding address on display 62 (block diagram figure 15).

In a similar way, depression of the "WRITE" key will set the "Write" mode of operation which will first read the address selected by the user; then set sub-routines address IN, data IN, for memorizing at this selected address the tape position being displayed on display 62.

The keyboard 72 allows the user to memorize up to 80 tape positions and upon depression of the "GOTO" key to easily have the tape being driven accurately to any position that he selects through said keyboard.

This automatic drive of the tape to a target position is effected according to the routine described in block diagram figure 16.

The sequence computes "P — T" and then accordingly switches the unit to the fast forward or fast rewind mode of operation.

During drive of the tape at high speed, the microprocessor permanently checks the value of "P — T" and when it reaches 32 (two times "16" pulses) the unit is switched into intermediate speed so as to reach the target position very accurately.

With such a system, it is no longer necessary to take notes of the tape counter every time a recording operation is powered; just select an address and memorize the displayed tape position which is displayed on display 62.

MEMORY ORGANIZATION (see fig. 17)

The ER 1400 EAROM has been organized in such a way that:

— memories 0 to 79 can be used for memorizing any tape position wished by the user;

— memories 80 and 81 are used only for memorizing the present tape position when tape movement is stopped — memory 80 for side I; memory 81 for side II.

These operations (READ or WRITE) can only be performed by the microprocessor.

— memories 82 to 99 are used for prememorized constants in connection with the type of cassette, tape, etc . . . in which the ER 1400 circuit is installed.

Said constants can be entered by the tape manufacturer and corresponding memories can only be READ by the microprocessor upon insertion of the cassette.

When the apparatus on which the cassette is set into operative position is of the bidirectionnel type, selection of the operative side is also provided by the auto-reverse mechanism. Indeed, since the movement of the magnetic tape can be reversed without turning up the cassette both connectors 55, 56 can detect the operative side of the cassette only upon its insertion.

The memories 0—79 can be divided into two portions (0—39 and 40—79) in order to define the references relating to each side of the cassette (Side I: 0—39; Side II: 40—79).

An electronic safety can be provided in order to prevent the user from reading or writing informations on that portion of the memory which corresponds to side II when the operative side is side I.

The present position of the magnetic tape in the embodiment described is a function of the number of pulses of the take up reel; However, any other device such as linear measuring device (Belgian patent No. 855.968) may be used without going outside the scope of the invention.

In figures 5 to 8 numeral 2 designates the cassette, 3 the magnetic tape, 24 and 25 the reels for storing the tape and 5 the memory circuit with the connecting pins 26 passing through the case so as to make contact with corresponding elements of the tape recorder.

In accordance with the invention a lever 30 may be provided which is arranged substantially parallel with the line connecting the spindles of reels 24 and 25 and which may pivot about an axis 31 integral with the cassette 2.

On this lever 30 is mounted a pawl 33 which is V-shaped and able to pivot about the axis 32; moreover, on the lever 30, near the pawl, a projection 34 is provided to which is fixed a spring 35 which is connected by its other end to a projection 36 on the member 33 in the vicinity of the apex of the latter.

Opposite the apex, the pawl 33 has two surfaces 44, 45 inclined in opposite direction, which will be referred to later.

Thanks to a flat part 37 foreseen on the axis 32, the pawl 33 is maintained under the effect of the spring 35 in a position perpendicular with respect to the lever 30.

Furthermore, a spring 38 resting against the inside edge of the case 2 of the cassette acts upon the lever 30 in such a way as to urge the latter constantly in the direction of the reels.

A window 39 is cut out in the case of the cassette in the vicinity of the free end of the lever 30 underneath which and underneath the end of the lever a micro-contactor 40 is provided.

It is also possible to provide a switch located outside the cassette in the tape recorder which is actuated directly by the lever 30, for example, through the window 39.

In a cassette made in accordance with the invention and substantially in a position situated on the median axis and underneath the lever 30 an opening 41 of oval shape is provided whilst a tape recorder intended to receive such a cassette carries a rod 42 which, on introduction of the cassette, enters the opening 41 in such a way that the lever 30 is maintained and is blocked in the position shown in figure 5.

In this case the pawl 33 does not touch the notches 43 of the reel 25 and is kept clear of these.

If a cassette according to the invention is

introduced into a tape recorder not designed to receive such a cassette and not containing therefore the blocking rod 42, the spring 38 will act upon the lever 30, exerting a pressure on the same in such a way that the apex of the pawl 33 comes into contact with the notches 43 of the reel 25, and the latter, as soon as it is put into rotation (in one or the other direction) will cause the pawl 33 to pivot into the position of figure 6, whilst the spring 35 will act in turn to cause the pawl 33 to rock until the inside surface of one of the flanks 44, 45 of the pawl 33 comes into contact with the projection 34 of the lever 30 (figure 7) and acts upon the same; because of this the lever 30 is brought into the position of figure 7 where it can act on the micro-switch 40 causing erasure of the indications concerning the tape positions stored in the memory block of the memory circuit associated with the cassette.

Moreover, the end of the lever 30 will be situated in front of the window 39 of the cassette, thus immediately showing to the user that the cassette has been used in a tape recorder not designed for a cassette according to the invention.

The end of this lever will preferably be coloured, for example, in red.

When the cassette is to be re-used in a suitable tape recorder it is sufficient to introduce a pointed object into the slot 41 in order to bring the lever 30 into the position of figure 8 where the pawl has been returned into the initial perpendicular position on the lever.

In the case where the contactor fulfilling the position of microswitch 40 is outside the cassette, the introduction of the cassette wherein the lever 30 is in the position of figure 7 causes erasure of the tape position stored in the memory contained in the cassette.

Furthermore, as a result of the lever 30 being opposite the opening 41, the introduction of the rod 42 is not possible and the cassette cannot be placed completely into the normal operating position. Thus it is necessary to introduce a pointed object into the slot 41 in order to bring the lever 30 into its initial position.

Hereinafter there will be described another embodiment of the device for making the user aware that the cassette has been introduced into a tape recorder or display apparatus which is not provided with a suitable programmed microprocessor.

Said device is particularly convenient for video cassettes of the type known as "VHS" (fig. 18).

These cassettes can be used on only one side.

The housing 100 of such a "VHS" cassette is made of two half-cases: a lower one 100^1 and an upper one 100^2.

Figures 19 and 20 show the inside of the two half-cases after opening by pivoting along the front side of the cassette.

The device uses the fact that each video cassette comprises a locking mechanism for locking the reels when the cassette is not used.

Said mechanism is provided in the lower half-case as shown in Figure 19.

An angle lever 101 (figures 19, 21, 22) articulated on an axle 102 comprises on the one hand a tongue 103 and on the other hand two arms 104 disposed substantially at right angles to the tongue 103.

On axles or shafts 105 disposed at right angles to the bottom of the half-case 100^1 substantially V-shaped latches 106 are hinged having one branch 107 placed so as to be able to cooperate with one arm 104 of the toggle lever 101 whereas the other branch 108 of the latches can cooperate with a peripheral toothed flange 109 provided on the corresponding reel 110.

Said latches are biased by springs 111 arranged so as to exert on the branches 108 a thrust towards the toothed edges 109 of the reels.

In the bottom of the half-case, at a location facing the tongue 103, there is formed an aperture 112 (figures 21 and 22) the function of which will be explained hereafter.

In the upper half case 100^2, there is provided a monitoring device which comprises a blade 113 (figures 20—24) carrying a pin 114 guiding the blade 113 for sliding in an elongated aperture 115 formed in the upper side of the half-case 100^2.

At its end, the blade 113 is broadened or widened to provide a signal plate 116 intended to appear in a window 117 formed in the upper half-case 100^2.

The blade 113 is subjected to the action of a spring 118 and comprises a L-shaped slot 120 made in a widened part 113^1 of the blade 113.

A pin 119 is carried by a lever 121 which can slide in a direction at right angle to the blade 113 and which is subjected to the action of a spring 122.

At its end, the lever 121 comprises a fold 123 (figure 21) at right angle for cooperating with the branches 107 of the latches 106 of the reel locking mechanism.

When the half-cases are assembled, the fold 123 comes at a location behind both branches 107 (figure 21).

When the cassette 100 is loaded in the apparatus 124 (figures 21 and 22), a push button 125 mounted on the frame thereof enters through the aperture 112 into the cassette 100 and acts on the lever 101 so as to cause it to pivot on the axle 102. Thus doing, the arms 104 act on the branches 107, of the latches 106; due to the rotation of the lever 101, the branches 108 become disengaged from the teeth 109 and the reels 110 become free. Simultaneously by action of the branches 107 on the fold 123, the lever 121 is caused to move according to arrow F (figures 22, 24).

With regard to the blade 113, there are two possibilities:

1/ the appartus 124 is provided with an appropriate microprocessor.

2/ the apparatus is not provided with a microprocessor.

In the case 1/, there is also provided in the housing for insertion of the cassette a stop 126 (figure 22) pivotally mounted on an axle 128 and

biased by a spring 127.

Said stop 126 is disposed in such a way that when a cassette 100 is introduced into the housing, the stop 126 slides on the upper side or face and, when the cassette is in operative position, comes in front of the button or pin 114.

In that way the movement of the lever 121 has no influence on the blade 113.

Indeed as soon as the cassette is lowered on to the main frame, the lever 121 is displaced by the pusher 125, but the blade 113 remains stationary because the stop 126 retains the button 114. Thus, the signal plate 116 shall appear in the window 117 of the cassette 100; when the cassette is lifted from the main frame, the lever 121 mechanically locks the blade 113 thanks to the shape of the slot 120 and the cassette can be removed without the indication plate having been actuated.

In case 2/ where the apparatus is not provided with a microprocessor, nothing is provided in the housing of the cassette to maintain the button 114 stationary so that the blade 113 acted upon by the spring 118 slides until the pin reaches the bottom of the L-shaped slot 120 and stops this movement. The signal plate 116 is therefore caused to project in the window 117. Said plate is preferably painted with a gaudy color such as red.

The user is thus always warned as soon as the cassette with a memory has been used in a recorder apparatus which is not designed to drive said memory.

The red extremity of the plate 116 appearing through the window 117 indicates that the position of the tape (sides I and II, reversible cassette) does no more correspond with the position contained in the addresses 80 and 81 of the memory since the tape contained in the cassette may have been advanced without any up-dating of the memory.

The content of all the other memory addresses remains nevertheless valid and the user merely needs to rewind completely the tape up to the starting thereof and to set the display of the tape position and the content of the memories 80 and 81 to zero.

If the user did not notice the red extremity of the plate 116 through the window 117, the button 114 having moved with the blade 113 will actuate a micro-contactor 130 (figure 22A) mounted on the housing of the apparatus 124 when said cassette will be reused in an apparatus provided with a microprocessor. Said micro-contactor 130 is adapted to actuate an electrical audible or luminous warning device such as an intermittent light. It can also cause the twinkling of the display devices in the apparatus to draw immediately the user's attention.

Figures 25, 26 and 27 show the use of the previously described device in a reversible type of cassette 200. Said cassettes also are provided with a mechanism for locking the reels or one of the movable parts of the cassette such as tape protecting door when they are removed from the recorder apparatus. Said mechanism is adapted for being actuated on both sides of the cassette 200 and is also associated with an indicator device 216 similar with that one (116) which has been described above, and visible through a central window 217. In figure 27 there is shown a cassette in operative position within a corresponding apparatus 224 provided with two pivoting stops 226 similar with those (126) described above, for locking buttons 214.

It should be understood that the signal device will be actuated in any position in which the cassette 200 is inserted into an apparatus without microprocessor.

The device described above and provided for warning that the memory cassette has been used with an apparatus not intended to drive said memory may be used to mask the contacts 52 of the memory and thus prevent its use (for example plastic door).

Hereabove there have been described mechanical devices intended to prevent erroneous readings when using a cassette having a memory in a tape recorder which does not have the appropriate programmed micro-processor. It should however be understood that electric or electronic equivalents of said devices (such as condensers, flip-flop devices, coils . . .) can be used without going outside the scope of the invention.

CLAIMS

1. A device for memorising the instantaneous position of a magnetic tape contained in a cassette comprising on the one hand a detector of the movement of the magnetic tape delivering a signal representative of the instantaneous position of the same, and on the other hand an electronic memory circuit, characterised in that with each cassette (2) is associated an electronic memory circuit (5) which is removable in relation to the tape recorder.

2. A device in accordance with claim 1, characterised in that a receptacle (4) is provided in the tape recorder into which a memory circuit (5) associated with the cassette (2) is introduced, this receptacle (4) having contacts intended to receive pins of the memory circuit in order to ensure the functioning of the latter when it is in operative position.

3. A device in accordance with claim 1, characterised in that the electronic memory circuit (5) associated with the cassette (2) is made integral with the same (figure 4).

4. A device in accordance with claims 1—3, characterised in that the memory circuit contains data relating to the cassette and the magnetic tape contained therein.

5. A device in accordance with any one of claims 1—4, characterised in that for determination of the tape position a device delivering pulses (12, 14) is used.

6. A device in accordance with any one of claims 1—5 characterised in that the pulses representative of the instantaneous tape position are transmitted to a control circuit (15) receiving

information relating to the cassette (introduction, ejection) and to the movement of the magnetic tape (stop — go-sense of fast movement).

7. A device in accordance with any one of claims 1—6, characterised in that through its outputs the control circuit (15) controls the data reading and recording phases in the memory circuit (5) as well as the display through a digital or analogue device (16) of the position of the magnetic tape.

8. A device in accordance with any one of claims 1—7, characterised in that when a cassette (2) and its memory circuit (5) are introduced into the tape recorder (1) the control circuit (15) ensures first the reading of the position of the tape contained in the memory circuit (5), this position being then transmitted to the display device (16) so that the user is immediately informed of the position of the tape in relation to one of its ends.

9. A device in accordance with any one of claims 1—8, characterised in that as soon as the movement of the tape (3) is interrupted, the circuit (15) controls the storage of the instantaneous position of the tape and in that, to this end, the circuit (15) transmits the value displayed by the device (16) onto the input of the memory circuit (5) and ensures recording thereof in the memory (6), so that if the cassette (2) and its memory circuit (5) are withdrawn from the unit, the instantaneous position of the tape at the moment of withdrawal is stored in the memory circuit (5).

10. A device in accordance with claim 3 characterised in that moreover means are provided allowing the storage once and for all of characteristices relating to the magnetic tape itself.

11. A device in accordance with any one of claims 1—10, characterised in that the memory component (6) of the memory circuit (5) comprises several addresses (19) allowing the user to store several positions of the magnetic tape which he desires to find again, and in that to this end a keyboard (20) with selector keys is provided which is connected to the control circuit (15) and which, when it is operated, achieves the recording at the selected address of the instantaneous position of the tape displayed in the display unit (16) and a second keyboard (21) also connected to the control circuit (15) which when it is operated achieves the reading of the content of the preselected address and the transmission of this content to a display device (22) so that the position of the tape contained in the block which has been selected can be read.

12. A device in accordance with any one of claims 1—11, characterised in that when the cassettes of magnetic tape comprise two sides usable for signal recording and reproduction operations, a single memory circuit may be used which is rendered operative whatever the position of insertion of the cassette and which stores the position of the magnetic tape in relation to its ends (either by difference or by complement of one side to the other), the detection of the side of the cassette which is in operative position being achieved with the help of a mechanical or electronic element which via the control circuit (15) ensures the selection in the memory circuit (5) of the position of the magnetic tape corresponding to the operative side of the cassette.

13. A device in accordance with any one of claims 1—12, characterised in that the memory circuit is of the static type.

14. A device in accordance with any one of claims 1—13, characterised in that the memory circuit is of the random access type.

15. A device in accordance with claim 1, for the storage of the instantaneous position of a magnetic tape contained in a cassette, characterised in that means are provided by which in the case where a cassette, made in accordance with the invention (with associated electronic memory circuit), is used on a tape recorder not containing the means necessary for driving the memory circuit, a warning system is made operative.

16. A device in accordance with claim 15, whereby in the warning system, once in its operative position, ensures erasure of the instantaneous tape positions stored in the memory circuit.

17. A device in accordance with claims 1 or 15 characterised in that means are provided for making the user aware that this cassette has been introduced into a tape recorder not made for a cassette in accordance with the invention.

18. A device in accordance with claims 15 to 17, characterised in that means provided consist of a device comprising a lever carrying a pawl, which device co-operates with one of the winding or unwinding reels in such a manner that if a cassette in accordance with the invention is introduced into a tape recorder designed for the reception of such a cassette, the pawl (33) is put into a position where it is clear of co-operation with the reel, whilst if a cassette according to the invention is introduced into a tape recorder not designed for the reception of such a cassette, the pawl put into contact with the reel is rocked allowing the lever to pivot and thereby reach a position where the free end of the lever acts on a contactor or other element capable of inducing the erasure of the memory block storing the instantaneous tape position of the memory circuit associated with the cassette.

19. A device in accordance with any one of claims 1—18, characterised in that in a cassette made in accordance with the invention, an opening (41) in oval form is cut out and a tape recorder designed to receive such a cassette carries a rod (42) which on introduction of the cassette enters the opening (41) in such a manner that the lever (30) is maintained blocked in a position where it is made impossible for the pawl to co-operate with the reel.

20. Device according to claim 3, characterised in that the memory (50) within the cassette (51) is connected to a circuit (52) located on one of the

outer sides of said cassette (51) and intended to cooperate with terminals (55—56) provided on the recorder when the cassette is brought to operative position.

21. Device according to claim 20, characterised in that the terminals (55—56) enable the central controller unit (60) to provide for reading and writing the signals in the memory circuit when the cassette is in operative position.

22. Device according to claims 20 and 21, characterised in that the controller unit (60) comprises a microprocessor driven by prerecorded programs or routines.

23. Device according to any of claims 20—22 characterised in that the controller unit (60) also provides for controlling display devices, automatic setting or adjusting devices, motor circuits, keyboards, control switches as well as the magnetic tape position detector.

24. Device according to any of claims 20 to 23, characterised in that as a function of the terminal (55—56) contacted by the circuit (52) upon introduction of the cassette, the operative side of the cassette (51) is automatically determined.

25. Device according to any of claims 20 to 24, characterised by a "read" (73) control which provides for reading and then display of an address (memory circuit) selected by means of a keyboard (72).

26. Device according to any of claims 20 to 25, characterised by a "write" (79) control which provides for writing or memorizing an information at the selected address by means of a keyboard.

27. Device according to any of claims 25 and 26, characterised by a keyboard (72) enabling to select any desired address in the memory circuit (50) in order to either reading the content of the address or to write or memorise informations at said address.

28. Device according to any of claims 20 to 27, characterised in that the controller unit also provides for reading other memorised or written constants for transmitting them to the circuits concerned so that their tuning takes place automatically.

29. Device according to any of claims 20 to 28, characterised by a key (GOTO) providing for positioning the tape according to a preselection made by the user.

30. Device according to claim 29, characterised in that driving of the tape towards a selected position is effected according to a routine or program during a sequence of which the term "P—T" is computed and depending on the result of such operation the apparatus is switched either to fast forward or to fast rewind.

31. Device according to claim 30, characterised in that when the term "P—T" reaches a predetermined value, the apparatus is switched to intermediate speed.

32. Device according to claims 1 to 3 and 20, characterised in that the memory circuit has several independent blocks.

33. Device according to claim 32, characterised in that a block is used only to memorise or write informations relating to the magnetic tape position.

34. Device according to claims 32 or 33, characterised in that a block is used only for memorising the instantaneous or present position of the magnetic tape with respect to each of the usable sides of the cassette.

35. Device according to any of claims 32 to 34, characterised in that a block is used only for memorising informations relating to the characteristics of the magnetic tape and/or the cassette containing the latter.

36. Device according to any of claims 1 to 35, characterised in that when the apparatus on which the cassette is set in operative position is of the bidirectional type, the selection of the operative face is also provided by the bidirectional assembly.

37. Device according to any of claims 32 to 34, characterised in that the memory block has two independent portions relating to each side of the cassette.

38. Device according to claims 32, 33, 36 and 37, characterised by an electronic safety which prevents the reader from reading or writing informations in the memory block corresponding to one side of the cassette when the other one is in operative position.

39. Device according to any of claims 1 to 38, characterised in that upon setting of the cassette in its operative position, the ultimate address used for memorising or writing positions of the tape with respect to the one or the other side of the cassette is automatically displayed to avoid that an address already used be selected in order to memorise another reference there.

40. Device according to claim 17 in which means are provided to call the user's attention onto the fact that a cassette has been inserted in a recorder or display apparatus which is not adapted for a cassette according to the present invention more particularly in its application to a cassette of the "VIDEO" type composed of two half-cases and comprising in the lower half-case a reel locking mechanism when the cassette is not used, said mechanism being formed of a toggle lever (101) which is caused to pivot when the cassette (100) is inserted into the recorder apparatus (124) and which through latches (106) causes unlocking of the reels, characterised in that in the upper half-case (100^2) there is provided an indicator or warning device also actuated by the reel locking mechanism upon introduction of the cassette.

41. Device according to claim 40, characterised in that the indicator device consists of a slidable blade (113) which can slide along the length of the cassette and is provided at its end with a signal plate (116) intended to appear in a transparent window (117) formed in the upper half-case (100^2) of the cassette.

42. Device according to claims 40—41, characterised in that the slidable blade (113) subjected to the action of a spring (118) comprises a generally Lshaped slot (120) made in a widened part (113^1) of the blade (113), that a lever (121) slidable in a direction at right angle to

the slidable blade carries a pin (119) and comprises at its end a fold (123) for cooperating with the reel locking latches (106), which fold (123) comes at a location behind the branches (107) of the latches (106) when both half-cases are assembled and that upon introduction of the cassette into the recorder apparatus, the signal plate (116) appears in the window (117) due to the fact that the lever (121) slides and the pin (119) cooperates with the slot (120).

43 Device according to any of claims 40—42 characterised in that in the case where the recorder apparatus (124) is provided with a microprocessor there is provided in the insertion housing of the cassette a pivoting stop (126) disposed in such a manner that upon introduction of the cassette said stop slides on the upper side of the cassette and — the cassette being in operative position — comes in front of a pin (114) so that the lever (121) may move without causing any displacement of the signal plate (116).

44. Device according to any of claims 40—42, characterised in that in the case where the recorder apparatus is not provided with a microprocessor, the pusher (125) being able to enter into the cassette acts on the reel locking mechanism so that the blade (113) is released and slides until the pin reaches the bottom of the slot (120) and stops this sliding movement.

45. Device according to claim 43, characterised by a microcontactor (130) mounted on the frame (124) of the recorder apparatus provided with a microprocessor, which latter is driven by the pin (114) of the slidable blade (113) and can actuate an electrical audible or luminous warning device such as an intermittent light, or the twinkling of the display devices of the apparatus.

46 Device according to claims 40—45, characterised in that in the case where a reversible cassette (figures 25—27) is used, the reel locking mechanism provided can be actuated on both sides of the cassette (200) and is associated with an indicator device (216) similar with that one provided for a non-reversible cassette.

47. Device according to any of claims 15 to 19 and 40 to 46, characterised by electronic protecting circuits equivalent to the mechanical devices, such as condensers, flip-flop devices, coils and the like.

48. A device for memorising the instantaneous position of a magnetic tape contained in a cassette, constructed and arranged for use and operation substantially as described herein with reference to any of the examples in the accompanying drawings.

49. A cassette having the memory circuit of a device according to any one of the preceding claims.

50. A cassette recording and/or playback apparatus having means for co-operation with a cassette memory circuit of a device according to any one of the preceding claims for storing an instantaneous tape position in said memory circuit.

New claims or amendments to claims filed on 29 Feb. 1980.

Superseded claims 40 to 50.

New or amended claims:—

New claims 40 to 52.

40. Device according to claim 15 or 17 in its application to a cassette comprising a mechanism which either locks the bobbin(s) when the cassette is not used either releases the bobbin(s) when the cassette is in operation position characterised in that in its period or phasis of releasing of bobbins, the said mechanism puts into action the identification or signal system.

41. Device according to claim 40 characterised in that the identification or signal system is rendered inoperative when such a cassette is introduced on an apparatus provided with a control device for its memory.

42. Device according to claim 40 characterised in that the signal system comprises a slidable blade provided with a signal plate which is intended to appear in one or two transparent windows formed in the casing of the cassette.

43. Device according to any one of the claims 40 to 42 characterised in that the slidable blade subjected to the action of a spring comprises an L-shaped slot for a pin combined with a lever adapted to be displaced in a direction perpendicular to the slidable blade and co-operating with the locking device of the bobbins in such a manner that when the cassette is introduced into the recording apparatus, the signal plate appears in the window(s).

44. Device according to any one of the claims 40 to 43 characterised in that in the case where the recording apparatus is provided with a control device for the memory there is provided in the space where the cassette is introduced a pivoting stop placed in such a manner that when the cassette is in operative position it is placed in front of a pin carried by the slidable blade so that the signal plate cannot be displaced.

45. Device according to any one of claims 40 or 42 to 44 characterised in that when the recording apparatus is not provided with a control device for the memory of the cassette the unlocking mechanism of the bobbins liberates the blade in order that the signal plate appears in the window.

46. Device according to claim 15 and relating to a cassette in which the signal system has been released (cassette formerly used on an apparatus not provided for the control of its memory) characterised in that the said signal system controls a warning device (visual and/or audible — flickering of the display device) intended for an apparatus provided for the control of the memory when the said cassette is reintroduced in such an apparatus.

47. Device according to claim 46 characterised in that the warning system for an apparatus provided with a control device of the memory of the cassette is controlled by a microcontactor mounted on the frame of said apparatus and

actuated by the pin of the warning device of the cassette.

48. Device according to any one of the claims 40 to 47 and relating to a reversible cassette characterised in that the warning system is operative and adapted to be seen for each cassette face.

49. Device according to any one of claims 15 to 19 and 40 to 48 characterised by electronic protecting devices equivalent to the mechanical devices such as condensers, flip-flop devices, tores.

50. A device for memorising the instantaneous position of a magnetic tape contained in a cassette, constructed and arranged for use and operation substantially as described herein with reference to any of the examples in the accompanying drawings.

51. A cassette having a memory circuit of a device according to any one of the preceding claims.

52. A cassette recording and/or playback apparatus having means for co-operation with a cassette memory circuit of a device according to any one of the preceding claims for storing an instantaneous tape position in said memory circuit.

Printed for Her Majesty's Stationery Office by the Courier Press, Leamington Spa, 1980. Published by the Patent Office, 25 Southampton Buildings, London, WC2A 1AY, from which copies may be obtained.