E. MERRITT.

SUBMARINE SOUND DETECTION.

APPLICATION FILED SEPT. 6, 1919.

1,378,420. **Patented May 17, 1921.**

2 SHEETS—SHEET 1.

Fig. 1.

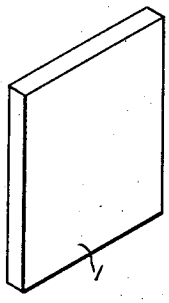

Fig. 2.

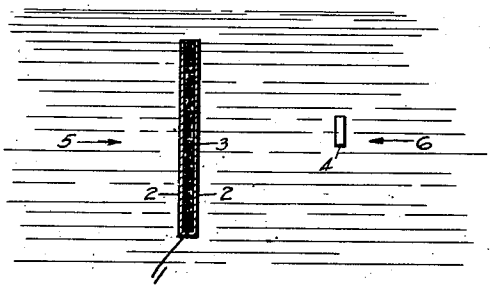

Fig. 3.

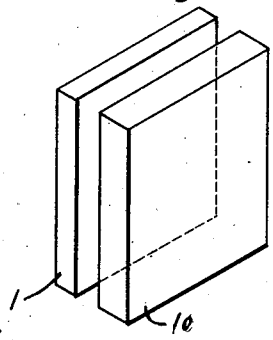

Fig. 4.

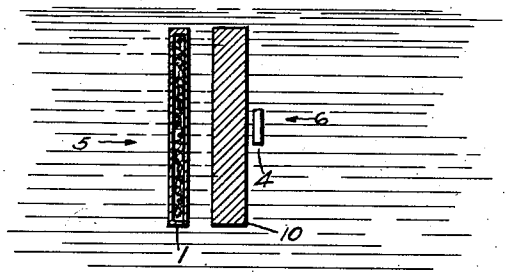

Fig. 5.

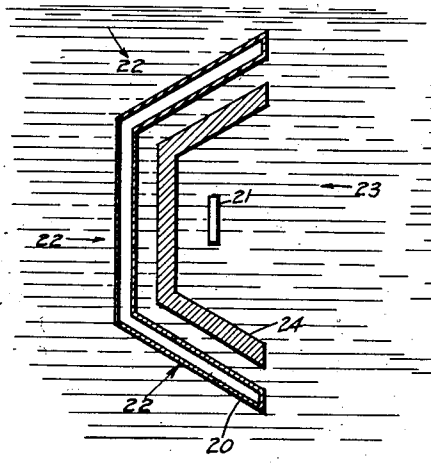

Fig. 6.

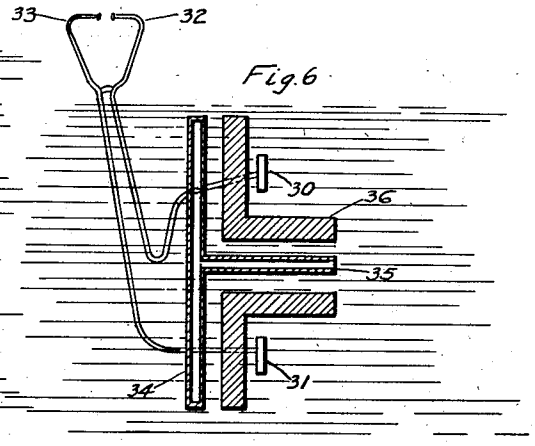

INVENTOR.

Ernest Merritt

E. MERRITT.

SUBMARINE SOUND DETECTION.

APPLICATION FILED SEPT. 6, 1919.

1,378,420.

Patented May 17, 1921.

2 SHEETS—SHEET 2.

Fig. 7.

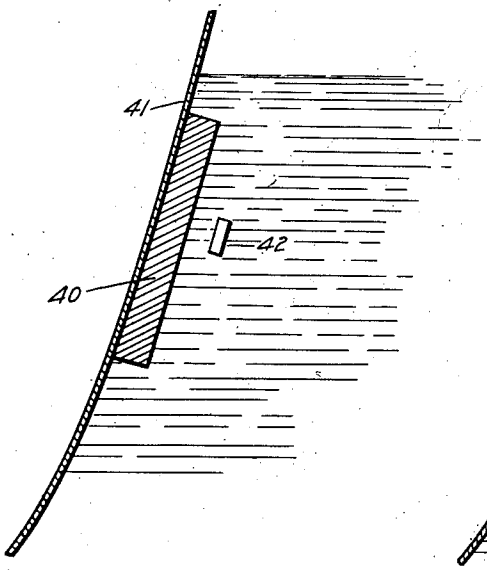

Fig. 8.

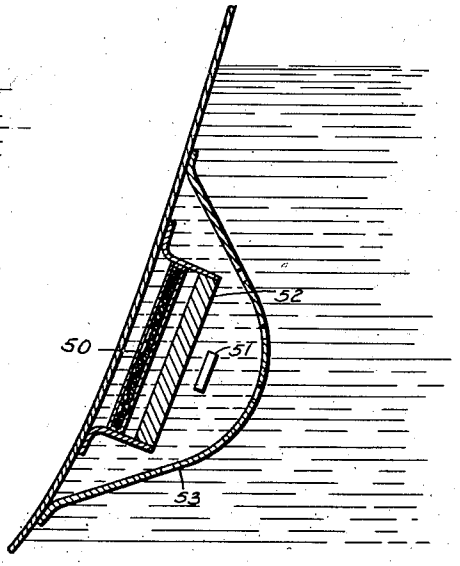

Fig. 9.

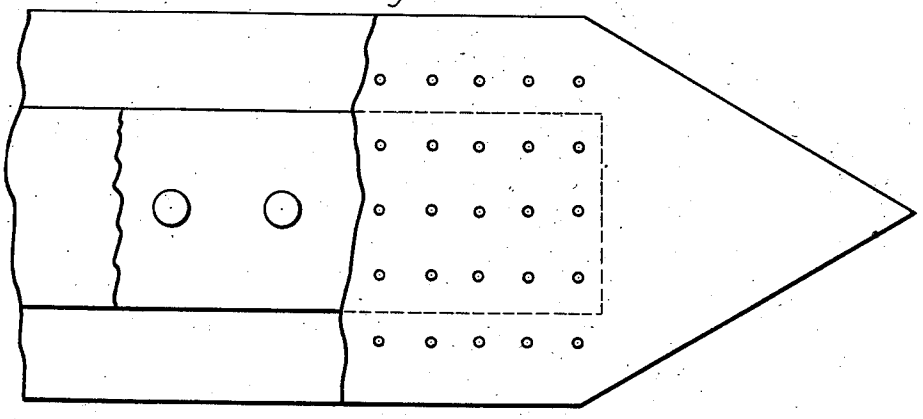

INVENTOR.

Ernest Merritt

UNITED STATES PATENT OFFICE.

ERNEST MERRITT, OF ITHACA, NEW YORK.

SUBMARINE SOUND DETECTION.

1,378,420. Specification of Letters Patent. Patented May 17, 1921.

Application filed September 6, 1919. Serial No. 322,229.

To all whom it may concern:

Be it known that I, ERNEST MERRITT, a citizen of the United States, residing at Ithaca, in the county of Tompkins and State of New York, have invented new and useful Improvements in Submarine Sound Detection, of which the following is a specification.

The present invention relates to submarine sound detection and more especially to so called pressure release surfaces and the combination with them of inertia plates.

Referring to the drawings, Figures 1 and 2 are a perspective view and a vertical cross section of a simple form of submarine sound screen. Figs. 3 and 4 are a perspective view and vertical cross section showing an inertia plate combined with a submarine sound screen. Fig. 5 is a horizontal section of a submarine sound direction indicating device. Fig. 6 is a horizontal section of another type of submarine sound direction indicating device. Fig. 7 is a vertical section showing an inertia plate secured to a ship's hull. Fig. 8 is a vertical section showing an inertia plate and sound screen secured to a ship's hull and covered with a blister. Fig. 9 is a side elevation of the structure shown in Fig. 8.

Sound waves are readily transmitted through a liquid such as water. Advantage of this is taken by the use of so-called hydrophones or sound receivers placed under water for the detection of other ships, particularly submarines. The observer listening in the receiver can hear the propeller noise of another ship for a considerable distance. This has led to the extensive application of listening devices for the detection of submarines.

Because of the greater density and elasticity of water as compared with air, screening materials placed in water have a distinctly different behavior from that of the same materials placed in air. Numerous experiments have shown that solid objects such as plates of iron or lead are not effective as screens when submerged in the water. A plate of lead an inch thick and twelve inches square produces no appreciable screening effect except for the extremely high pitched components of the sound. The plates of an iron vessel, even with the added stiffness and inertia of the frames and bulkheads, permit the sound waves to pass so freely from the surrounding water that listening apparatus may be used in the water or oil tanks of the vessel. The extremely small screening effect observed in such cases is doubtless due to the fact that the thickness of the metal is always small compared to the wave length of audible sounds. With sound whose pitch is above the audible vibrations, so that the wave length in water is only a few inches, the screening effect of such metal plates is undoubtedly great, but with sound whose pitch is below three thousand feet per second it appears highly improbable that useful screening can be obtained with masses of metal of such weight and dimensions as would permit of their employment in practice. On the other hand if we go to the opposite extreme and use materials which modify the sound waves in the water, not because of their rigidity and inertia, but because of their ability to yield freely to the pressure of the waves, effective screens can be made and it is possible to get useful results by the employment of screens of moderate dimensions. A bubble of air or a toy balloon of thin rubber is perhaps the simplest illustration of a screen of this type. When sound waves fall upon the balloon or bubble, the surface yields so freely that no appreciable increase in pressure can be produced in the immediate neighborhood of the surface of the balloon or bubble, and the pressure of the water is therefore unaffected by the sound waves. Such a surface is known as a pressure release surface. A sound receiver whose action depends on pressure change will give no response when placed in the water close to such a surface.

Screens which possess this property of yielding freely to pressure may be made in a great variety of ways. For example, a thin rubber bag or pad filled with air forms a good screen. Also air filled boxes with metal walls make good screens provided the metal is not too thick. A screen of this type is shown in Figs. 1 and 2. The walls 1 of the screen shown are made of thin metal,

such as tin plate, soldered together water tight to leave an air cavity. The inside of the screen shown in Figs. 1 and 2 is filled with some yielding material such as felt which prevents the sides from collapsing but permits the walls to yield under the sound waves. The hull of a vessel, even when the plates are as thick as three quarters of an inch, forms a yielding or pressure release surface for sound waves, as is demonstrated by the fact that the intensity of a sound heard in a submarine receiver placed near the hull is greatly reduced.

If a screen such as an air filled rubber bag or a yielding wall or air filled metal screen be placed between a submarine sound receiver and the sound source, the intensity of the sound heard is reduced. The intensity is reduced to nearly zero when the receiver is as close to the screen as it can be placed and increases gradually as the receiver is moved farther away. If the distance is twice as great as the diameter of the screen, the intensity is practically the same as though the screen were absent, because the sound is diffracted around the screen. Thus for example, a receiver 4 as shown in Fig. 2 is shielded by the screen 1 from sound coming from the direction indicated by the arrow 5. This action can be accounted for if we assume that the screen absorbs the waves falling upon it, but it can also be accounted for equally well upon the assumption that the waves are reflected by the screen. In either case diffraction around the edges would prevent the sound shadow from being perfectly defined. On the other hand, if the receiver 4 is placed between the screen 1 and the source of sound coming in the direction of arrow 6, the intensity of the sound heard is also reduced by the presence of the screen, and if the receiver is placed close to the screen the reduction in intensity is practically the same whether the receiver is in front or behind. This reduction in intensity in front of the screen cannot be accounted for on account of absorption, which would merely annul the waves falling upon the screen without alteration or reduction in any way at the points through which the waves have already passed.

To account for the reduced intensity in front of the screen it seems necessary to assume that when sound waves fall upon the yielding wall of the screen, secondary waves are sent back from it and the phase relations are such as to make the secondary waves partially neutralize the original disturbance. Such action by the screen is in fact to be expected; for as the surface of the screen yields to the incident waves it moves back and forth in exactly such a way as would cause it, if incident waves were not present, to radiate sound waves of the same character as the incident sound. The disturbance at any point near the screen must therefore be regarded as due to the superposition of these secondary waves upon the waves originally present. It is clear that at the surface of the screen the secondary waves must be equal in amplitude and opposite in phase to the waves which produce them, for their effect at that point is to reduce the pressure change to zero.

If the surface of the screen does not yield with complete freedom, the above statement is not exact. If the surface offers elastic resistance, the phase of the secondary wave will not be exactly opposite that of the incident wave. If there is real absorption of energy at the surface, the amplitudes will not be equal. It has, however, been found by experiment that screens of the character shown in Fig. 1 differ in their behavior to no appreciable extent from an ideal screen in which the yielding is complete.

If the receiver 4 is moved away from the surface of the sound screen 1, the loudness of the sound heard increases. If the receiver is moved about twelve inches away from the screen, the sound heard is of about the same loudness as it would be if the sound screen were not present. This distance will depend however upon the pitch of the sound, being less for high pitch sounds.

When the receiver is close to the sound screen, the pressure on the water is released by the yielding surface of the sound screen. When the receiver is moved away from the sound screen for a little distance, the yielding of the surface of the sound screen can produce no effect in pressure reduction at the receiver until the inertia of the water between the receiver and the screen has been overcome. For this reason if there is a sufficiently thick layer of water between the receiver and the pressure release surface of the screen, the pressure release surface has no appreciable effect upon the receiver. It is therefore possible to use the receiver 4 for the reception of sounds coming from the direction indicated by the arrow 6, provided the receiver 4 is placed far enough from the sound screen 1 to be outside that region in the water in which there is a substantial reduction in the pressure variation of the sound waves due to the pressure release surface of the screen. On the other hand, the farther away the receiver 4 is from the screen, the less shielded it is from sounds coming from the direction shown by the arrow 5. It is therefore desirable to place the receiver 4 as close to the sound screen as possible. I have found that the receiver 4 may be placed closer to the sound screen if an inertia plate is placed between the sound screen and the receiver. Referring to Figs. 3 and 4, a solid metal plate 10 of lead or iron is placed close to the sound screen and the receiver 4 is placed close to

the plate 10. Lead has about eleven times the density of water so that a plate of lead one inch thick has substantially the same inertia as a layer of water eleven inches thick. If for the inertia of the water is substituted the inertia of such a plate, the receiver 4 may be placed close to the sound screen 1 with the plate 10 interposed between the receiver and sound screen. It has been found that when a receiver was mounted immediately in front of a lead plate about fourteen inches square and one inch thick, the sound heard in the receiver was substantially the same whether the screen was placed behind the lead plate or not.

The use of the inertia plate 10 as shown in Fig. 4 allows the same intensity of sound coming from the direction indicated by the arrow 6 to be heard at the receiver 4 placed close to the screen as when the receiver 4 is placed at a considerable distance from the screen as shown in Fig. 2. On the other hand, the receiver 4 placed closed to the screen as shown in Fig. 4 is much more effectively shielded from sound coming from a direction indicated by arrow 5.

Sound screens of the yielding wall type, which cut off substantially all sound by reflection may be used in the construction of sound direction indicating devices. If a cup shaped screen like that shown at 20 in Fig. 5 partially surrounds a receiver 21, receiver 21 will be shielded from sounds coming from the directions indicated by the arrows 22 but will not be shielded from sounds coming from the direction indicated by the arrow 23, so that if the screen 20 and the receiver 21 are turned around in the water, the direction of the sound may be determined by its maximum as heard in the receiver 21. A sound screen 20 may be used alone with a receiver 21 provided the sound screen is large enough so that the receiver 21 does not have to be placed too near the pressure release surface of the screen. If an inertia plate 24 is interposed between the receiver 21 and the screen 20, the receiver 21 may be placed close to the screen. This permits a smaller screen to be used and permits the receiver 21 to be placed near the bottom of the cup-like cavity formed by the screen. This permits a smaller device to be used and gives sharper indication of direction.

Another device employing a sound screen for detecting the direction of sound is shown in Fig. 6. In this figure, two receivers 30 and 31 are connected to ear pieces 32 and 33 respectively so that the direction of the incident sound waves may be determined by binaural sensation. A sound screen 34 is shown screening the receivers 30 and 31 from sounds from behind. This screen has an extension 35 between the receivers. It is found that the effect of the screen 35 between the receivers is to make the binaural sensation more perfectly defined for the same distance of separation between the receivers 30 and 31. For example, if the receivers 30 and 31 are eighteen inches apart in the water with no sound screen between them the binaural effect is not sharply defined, but if a sound screen is placed between the two receivers the binaural sensation is as sharply defined as though the distance had been increased to three feet or more. When a sound screen is used as shown in Fig. 6 to separate the receivers, inertia plates 36 are preferably used as indicated.

In Fig. 7 is shown the application of an inertia plate 40 to the side of a ship. The ship's plates 41, as above explained, operate as a pressure release surface because being backed up with air they yield to the sound waves. If a hydrophone or submarine sound receiver is placed too close to the side of the ship the intensity of the sound is greatly diminished. However, if a heavy plate, such as a plate of lead or iron an inch or more thick, be secured to the side of the ship as shown at 40 in Fig. 7, the sound receiver 41 may be placed close to the ship's hull.

In Figs. 8 and 9 is shown an arrangement of a sound screen, inertia plate and submarine sound receiver for use on a ship's hull. A sound screen 50 is placed on the ship's hull so as to be surrounded by water, and screens the receiver 51 from the sounds produced in the water by the vibrations of the hull, such vibrations being due, for example, to the ship's engines or to waves beating against the hull. An inertia plate 52 is placed between the receiver 51 and the plate 50. This permits the receiver to be placed close to the screen 50 to get a maximum screening effect. For structural reasons it is also advantageous to have the receiver as close to the side of the ship as possible. The sound screen 50, the inertia plate 52 and microphone 51 are secured to the side of the ship and may to advantage be inclosed as a whole by a curved stream line plate 53 known as a blister.

The present invention is not limited to its illustrated embodiment but may be embodied in other structures within the scope of the following claims.

I claim:

1. The combination of a sound screen having a yielding pressure release surface immersed in a liquid, a sound receiver immersed in the liquid in proximity to the screen, and an inertia plate interposed between the screen and receiver, substantially as described.

2. The combination of a sound receiver immersed in a liquid and a sound screen partially surrounding the receiver and shielding it from sounds at back and sides, and

an inertia plate between the receiver and sound screen, substantially as described.

3. The combination of a pressure release surface exposed to a sound conducting liquid, a sound receiver in the liquid in close enough proximity to the surface to be subject to a substantial pressure reduction of the sound waves if no added inertia mass were interposed between the surface and receiver, and an inertia mass interposed between the surface and the receivers whereby the sound pressure at the receiver is increased, substantially as described.

ERNEST MERRITT.