Nov. 5, 1957 L. C. MILLER ET AL 2,811,741

EASEL HINGE

Filed March 19, 1954

FIG. 1

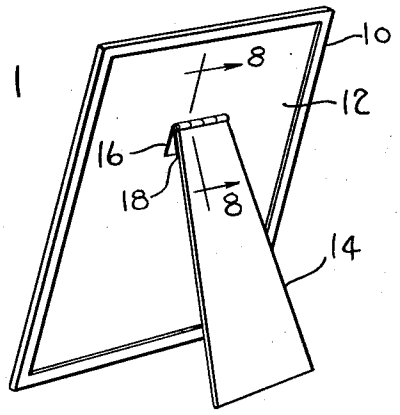

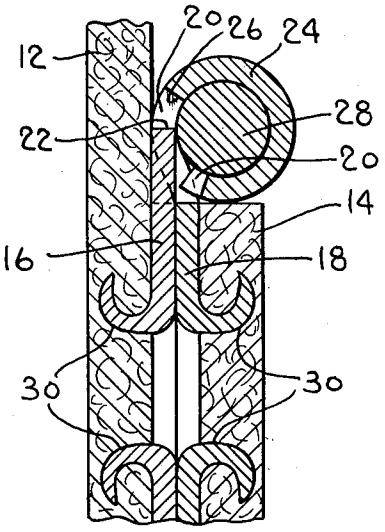

FIG. 8

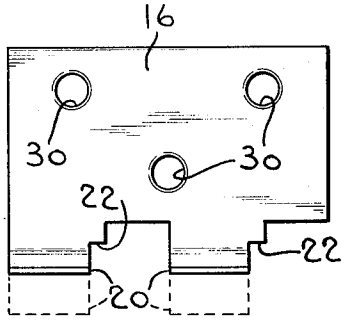

FIG. 2

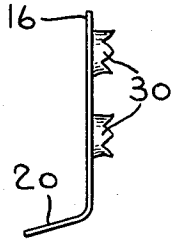

FIG. 3

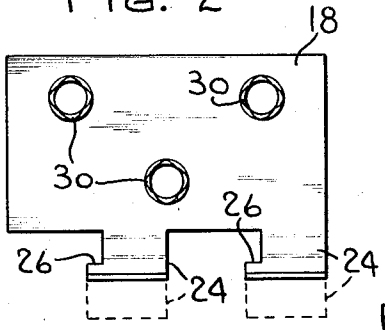

FIG. 4

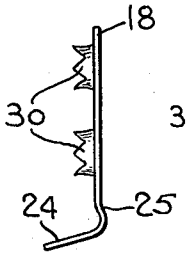

FIG. 5

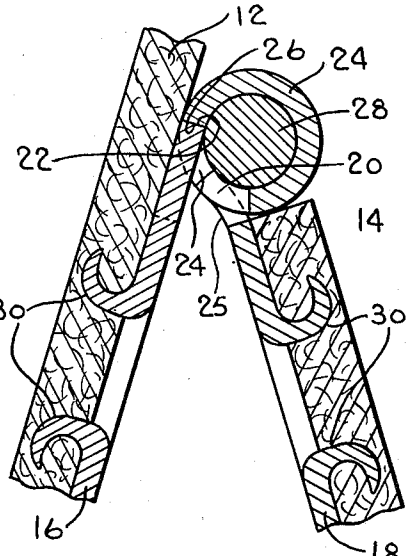

FIG. 9

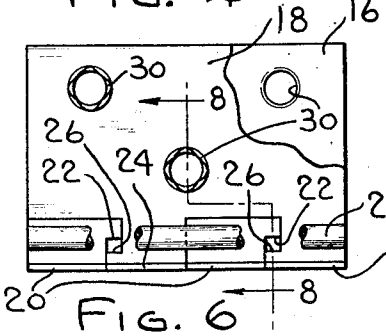

FIG. 6

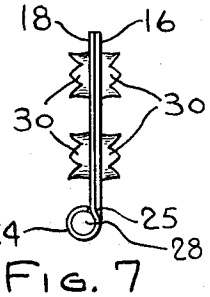

FIG. 7

INVENTOR.
LESTER C. MILLER
JOHN M. HIMES
BY
John W. Michael
ATTORNEY

United States Patent Office

2,811,741

Patented Nov. 5, 1957

2,811,741

EASEL HINGE

Lester C. Miller, Brookfield, and John M. Himes, New Berlin, Wis., assignors to E. R. Wagner Manufacturing Company, Milwaukee, Wis., a corporation of Wisconsin

Application March 19, 1954, Serial No. 417,346

1 Claim. (Cl. 16—191)

This invention relates to improvements in hinges and particularly to hinges the leaves of which have relative angular movement less than 90°. Such hinges have as one use, the interconnection of the support and backing of an easel-type picture frame. While hereinafter termed an easel hinge, such term is not to be construed as limiting the use of the hinge herein described and claimed.

The backing of easel-type picture frames have hinged thereto a support and the relative angular movement between backing and support is limited by a ribbon stopper or other type of flexible member extending between the board and the support. Such stoppers require hand assembly and are attached by a separate operation additional to that of hinging the support to the backing.

It is an object of this invention therefore to provide a strong light hinge the leaves of which will spread to a fixed limit of less than 90° of angular separation, such hinge being inexpensive to manufacture and easy to apply to members to be hinged for such limited angular spreading and limiting the spreading of such members without the use of stoppers or other motion limiting means additional to the hinge.

This object is obtained by a two leaf metal easel hinge which has the barrels of each leaf curled in the same direction about a pintle. A barrel on one leaf has a stop at its base facing the direction of the curl of such barrel. A barrel on the other leaf has a stop spaced from its base and facing opposite to the direction of the curl of such barrel. These two stops overlie each other and will inter-engage to limit the spreading of the leaves. Rosettes formed on each leaf may be simultaneously driven into the members to be hinged and peened over in a manner well-known in this art. The hinge thus constructed embodies its own limitation on outward swinging and hence does away with the necessity of applying additional stopper or the like.

The characteristics and application of this invention may be best understood by the following description of a specific embodiment when read in connection with the accompanying drawing, in which:

Fig. 1 is a view in perspective of an easel hinge embodying the present invention applied to an easel-type picture frame;

Fig. 2 is a view in top elevation of the base leaf of the hinge with the barrel forming projections of the leaf shown partly curled;

Fig. 3 is a view in side elevation of the leaf viewed in Fig. 2;

Fig. 4 is a view in top elevation of the outer leaf of the hinge with the barrel forming projections shown partly curled;

Fig. 5 is a view in side elevation of the leaf viewed in Fig. 4;

Fig. 6 is a view in top elevation of both leaves of the hinge superimposed prior to the completion of the curl of the barrel forming projections;

Fig. 7 is a view in side elevation of the hinge viewed

in Fig. 6 after the barrels have been completely curled about the pintle;

Fig. 8 is an enlarged fragmentary sectional view taken on the line 8—8 of Fig. 1, such sectional line being also shown on Fig. 6; and

Fig. 9 is an enlarged fragmentary sectional view similar to the view of Fig. 8 with the leaves spread to the limit provided by stops on the barrels thereof.

In the embodiment of the invention shown in the drawing the easel hinge is shown secured to the backing 12 of a picture frame 10 and a support 14. The support 14 is swingable from collapsed position adjacent the backing 12 to the fully spread position (less than 90° angular separation) shown in Fig. 1 wherein it supports the frame on a flat surface. This hinge consists of a base or bottom leaf 16 and an outer or upper leaf 18 interconnected by a pintle 28. The leaf 16 has two spaced projections 20 which are curled into barrels for the pintle 28. In Fig. 2 the projections are shown only partially curled. Each of these projections has a stop 22 near the base thereof which faces the outer end of the projection or in the direction of the curl.

The outer or upper leaf 18 has two spaced projections 24 which are also curled into barrels for the pintle 28. Each of these projections 24 has a stop 26 spaced from the base of the projection and facing toward such base or oppositely from the direction of the curl. In Fig. 4 the projections 24 are shown partially curled. With the upper leaf 18 superimposed on the bottom leaf 16 the projections 24 will fit between the projections 20 and the stops 22 and 26 will be spaced from and face each other. While in this position the pintle 28 is placed as shown in Fig. 6 and the projections 20 and 24 are curled over such pintle to form barrels for the hinge. In order to have the two leaves fit more flush in the collapsed position thereof, it may be necessary to offset the projections 24 from the body of leaf 18 as is indicated at 25.

The assembled easel hinge may be easily simultaneously connected to the backing 12 and support 14. Each of the leaves have rosettes 30 which project from the exposed sides. With the leaves 16 and 18 in collapsed position such rosettes may be driven into the material of the backing member 12 and support 14 and slightly deformed as shown in Figs. 8 and 9 to tightly secure the hinge to such members.

One of the features of this invention is the rigidity and positiveness of the stops 22 and 26 in limiting the separation of the leaves to the desired angle. Because the projections 20 and 24 are both curled in the same direction the stops 22 when engaging the stops 26 to limit the spread, the hinges will cause such projections to curl tighter rather than uncurl. Consequently the barrels will remain tight and hold the leaves against further movement.

What we claim and desire to secure by this patent is:

In an easel hinge, a flat base leaf having a base facing side, a barrel integral with said base leaf curled away from said base facing side and lying wholly inwardly of said base facing side, a stop on the side of said barrel at the juncture thereof with said base leaf and facing in the direction of said curl, a flat outer leaf having a base leaf facing side, a barrel integral with said outer leaf curled away from said base leaf facing side, said barrel being partially offset inwardly from said base leaf facing side and lying partly outwardly of said base leaf facing side so that when said barrels are alined said leaves will be flat when in folded position, a stop on the side of said outer leaf barrel adjacent the free end thereof and facing in a direction opposite to the direction of said latter curl, said stop lying within the circumferential surface of said outer leaf barrel and spaced from said first mentioned stop an angular distance of less than 90° in the folded

condition of said leaves so that said leaves will flatly engage in closed position and swing to extended position less than 90° apart, and a pintle inserted in said barrels to hold said leaves together.

References Cited in the file of this patent

UNITED STATES PATENTS

838,832 Woodbury ---------- Dec. 18, 1906

1,958,465 Bittorf ---------- May 15, 1934

2,228,876 Howe ---------- Jan. 14, 1941

2,273,455 Whitman et al. ---------- Feb. 17, 1942

FOREIGN PATENTS

993,508 France ---------- July 25, 1951