A. S. HUGHES.

TOILET PARTITION.

APPLICATION FILED NOV. 30, 1918.

1,311,229.

Patented July 29, 1919.

Fig. 1.

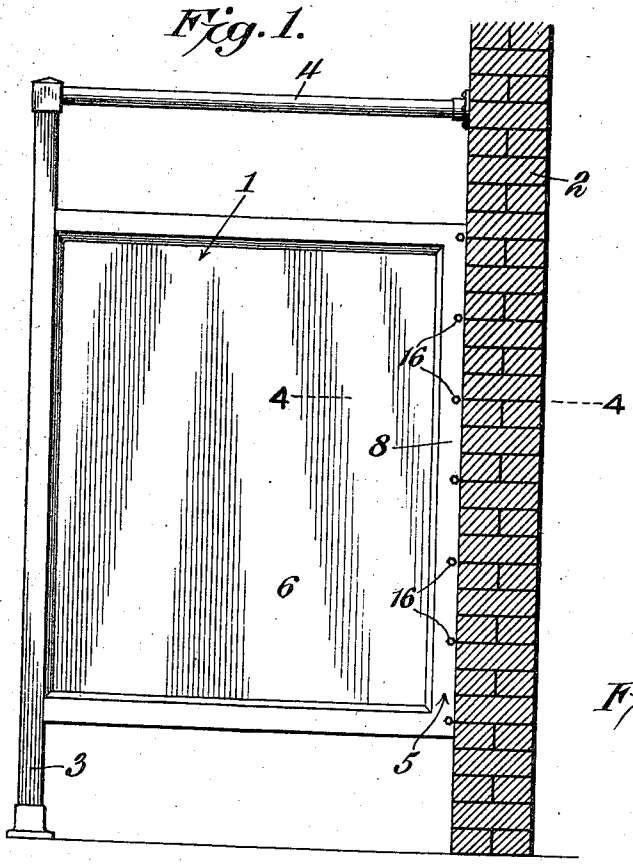

Fig. 2.

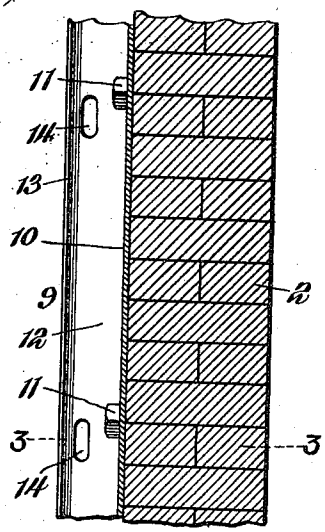

Fig. 3.

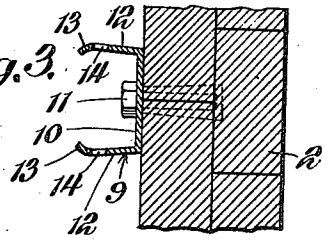

Fig. 4.

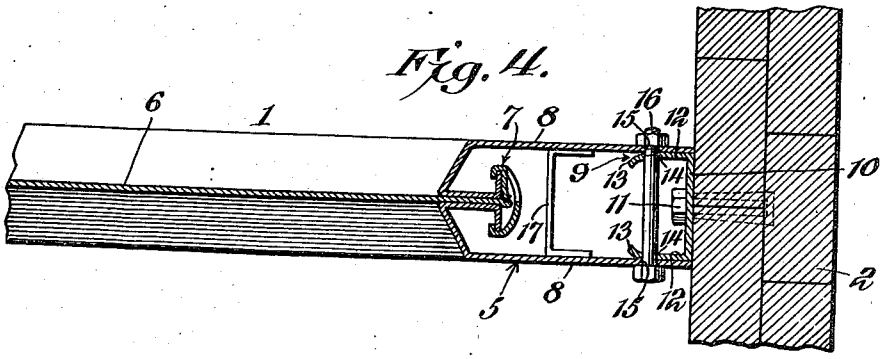

WITNESSES

Howard D. Ort.

F. T. Chapman.

Arthur S. Hughes, INVENTOR,

BY E. G. Siggers.

ATTORNEY

UNITED STATES PATENT OFFICE.

ARTHUR SHERIDAN HUGHES, OF MANSFIELD, OHIO.

TOILET PARTITION.

1,311,229. Specification of Letters Patent. Patented July 29, 1919.

Application filed November 30, 1918. Serial No. 264,795.

To all whom it may concern:

Be it known that I, ARTHUR S. HUGHES, a citizen of the United States, residing at Mansfield, in the county of Richland and State of Ohio, have invented a new and useful Toilet Partition, of which the following is a specification.

This invention has reference to toilet partitions, and its object is to provide a partition structure capable of manufacture from sheet metal and at the same time be particularly rigid and resistant to distortion.

The invention has to do particularly with the means whereby the molding or stile of the partition abutting the building or cross wall of masonry or plaster is made fast to the wall. The invention contemplates the employment of a channel to be fastened to the wall by suitable means and the stile has the edge toward the channel open, with the stile and channel so related that the stile will embrace and grip the channel, the parts being subsequently securely fastened together by bolts. The structure is such as to accommodate any such variations as may occur in the construction of the walls without showing the manner of compensating for such variations.

The invention will be best understood from a consideration of the following detailed description taken in connection with the accompanying drawing forming part of this specification, with the understanding, however, that the invention is not confined to any strict conformity with the showing of the drawing, but may be changed and modified so long as such changes and modifications mark no material departure from the salient features of the invention as expressed in the appended claims.

In the drawing:—

Figure 1 is an elevation of a toilet partition and a cross section of the wall to which it is secured.

Fig. 2 is a longitudinal section through a small portion of a channel fast to the wall, but drawn on a larger scale than Fig. 1.

Fig. 3 is a section on the line 3—3 of Fig. 2.

Fig. 4 is a section on the line 4—4 of Fig. 1, but drawn on the scale of Figs. 2 and 3.

Referring to the drawing, there is shown in Fig. 1 a partition 1 of a toilet structure made fast to and projecting from a wall 2. The partition 1 extends from the wall 2 to a post 3 upstanding at an appropriate distance from the wall 2 and connected at the top to the wall by a bar 4. The partition 1 includes a frame provided with a hollow stile 5 of sheet metal, which stile is located adjacent to the wall 2 and may therefore be designated the wall stile or molding. The partition also includes a panel 6 secured to the stile 5 and to other stiles included in the partition in a manner shown and described in my application #226,877, filed April 5, 1918, such fastening means being indicated at 7 in Fig. 4. The fastening means are not described herein since they are fully shown and described in the aforesaid application and form in themselves no part of this invention. The stile 5 has substantially parallel sides 8 and is open along the edge remote from the panel 6.

Secured to the wall 2 is a channel strip 9 having a base portion 10 made fast to the wall 2 by expansion bolts 11 or in any other appropriate manner, expansion bolts being the preferable means. The channel strip has side portions 12 which, before the application of the stile 5 thereto, flare, but the outer edge portions of the sides 12 of the channel strip are bent toward each other so as to approach the said edges closer than the spacing of the side walls 8 of the stile 5. The inwardly bent edges, indicated at 13, serve the purpose of facilitating the application of the stile 5 into embracing relation to the channel 9 and, moreover, the bend or crimp at the outer edge of each side 12 serves to stiffen the channel. When the stile 5 is applied to the channel the sides or walls 12 of the channel are forced together into substantial parallelism, and then exert an expansive force upon the stile which in itself contributes materially to holding the stile to the wall. To render the holding effect certain, the side walls 12 of the channel are provided with perforations 14 elongated in the direction of the length of the channel and close to the outer edges of the side walls 12. Matching the perforations 14 are other perforations 15 in the side walls 8 of the stile 5, and when the stile is placed onto the channel, bolts 16 are inserted through the matching perforations 14 and 15, whereby the stile is made permanently fast to the wall 2, with any imperfections in building compensated for by the

perforations 14. The side walls 8 of the stile 5 may be reinforced by spacing braces 17 located at suitable intervals.

The stile 5 and securing channel 9, by means of which the partition is made fast to the wall 2, are readily produced of sheet steel, the partition being rigidly secured to the wall 2 against any liability of displacement, such rigidity being contributed to by the expansive force of the side walls of the channel and the turned over edges of such side walls which stiffen the channel after the manner of corrugations.

The slots 14 allow for any variation in the construction of the walls without necessitating more than a round hole of proper size in the walls 8 for the passage of the through bolts 16.

What is claimed is:—

1. Fastening means for securing the wall-stile of a sheet metal partition to a wall, comprising a channel member made fast to the wall and provided with flaring sides, with the stile having an open edge and embracing and compressing the side walls of the channel, and the channel and stile being secured together by through bolts traversing the side walls of both.

2. Fastening means for securing the wall-stile of a sheet metal partition to a wall, comprising a channel member made fast to the wall and provided with flaring sides, with the stile having an open edge and embracing and compressing the side walls of the channel, and the channel and stile being secured together by through bolts traversing the side walls of both, the channel having the outer edge portions of the side walls inwardly directed to stiffen said walls and facilitate the entrance of the channel into the stile.

In testimony, that I claim the foregoing as my own, I have hereto affixed my signature.

ARTHUR SHERIDAN HUGHES.

Witnesses:

P. W. BACHENSTEIN,

HAZEL RUSSELL.