US00D338065S

United States Patent [19]

Rose

[11] Patent Number: Des. 338,065

[45] Date of Patent: ** Aug. 3, 1993

[54] **BIOPSY FORCEPS**

[76] Inventor: **Anthony Rose**, 741 Lakefield Rd., Suite G, Westlake, Calif. 91361

[**] Term: **14 Years**

[21] Appl. No.: **628,663**

[22] Filed: **Dec. 17, 1990**

[52] **U.S. Cl.** **D24/143**; D24/146

[58] **Field of Search** D24/133, 146, 147; 604/171, 205, 206, 207, 208; 128/751, 749

[56] **References Cited**

U.S. PATENT DOCUMENTS

D. 272,855	2/1984	Bel et al.	D24/143
4,243,047	1/1981	Olsen	128/751
4,427,014	1/1984	Bel et al.	128/751
4,971,067	11/1990	Bolduc et al.	128/751
4,977,900	12/1990	Fehling et al.	128/751

Primary Examiner—Stella Reid
Assistant Examiner—I. Simmons
Attorney, Agent, or Firm—Roger A. Marrs

[57] **CLAIM**

The ornamental design for a biopsy forceps, as shown.

DESCRIPTION

FIG. **1** is a side elevational view of a biopsy forceps showing my new design;
FIG. **2** is a top plan view thereof;
FIG. **3** is an end elevational view thereof;
FIG. **4** is an end elevational view thereof, opposite that shown in FIG. **3**;
FIG. **5** is a side elevational view thereof; and,
FIG. **6** is a bottom plan view.

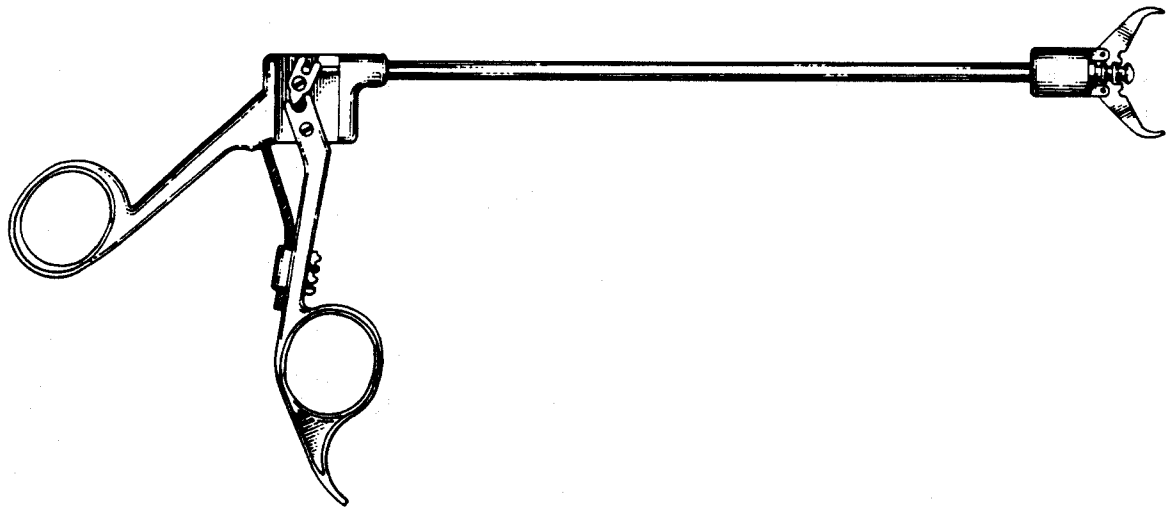

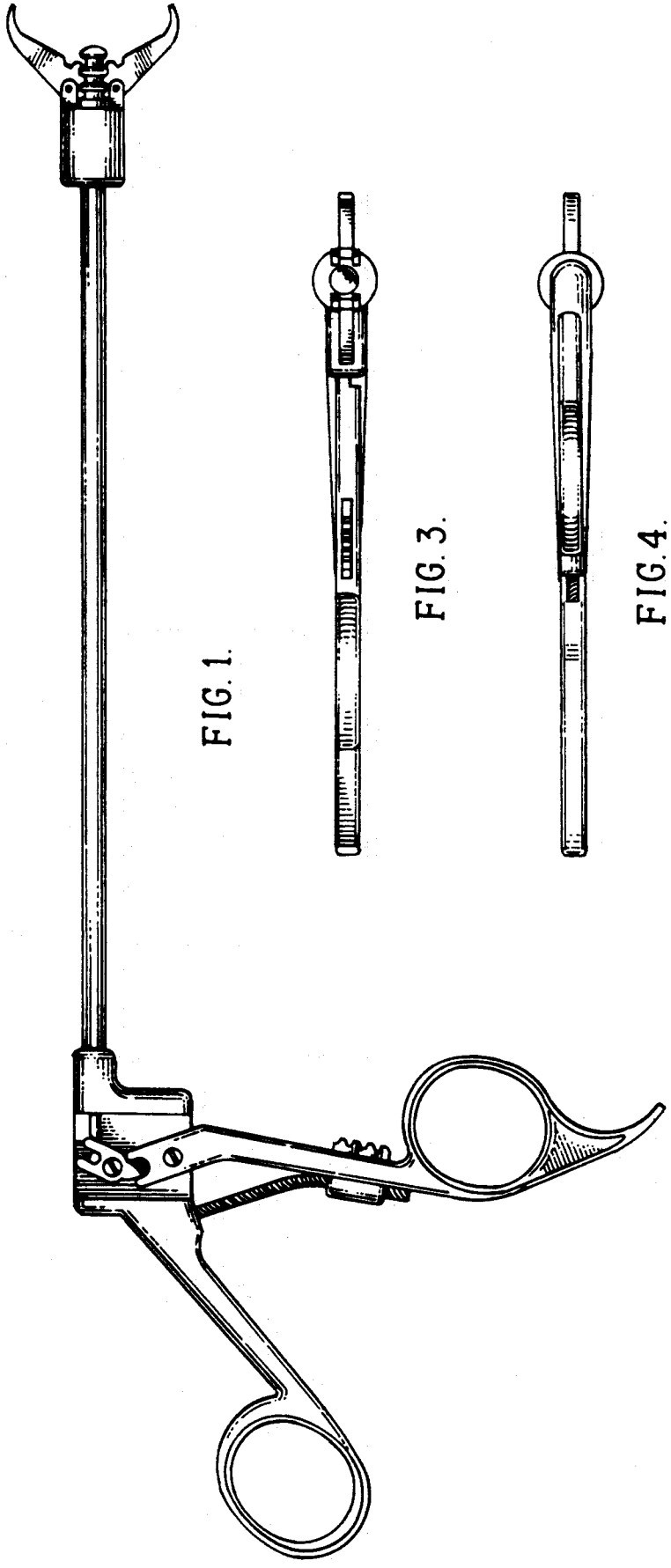

FIG. 1.

FIG. 3.

FIG. 4.

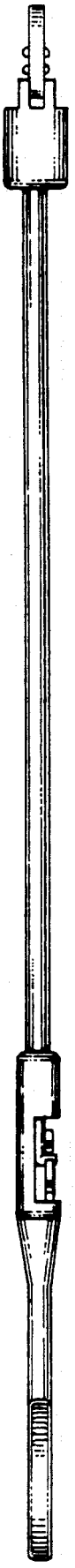

FIG. 2.

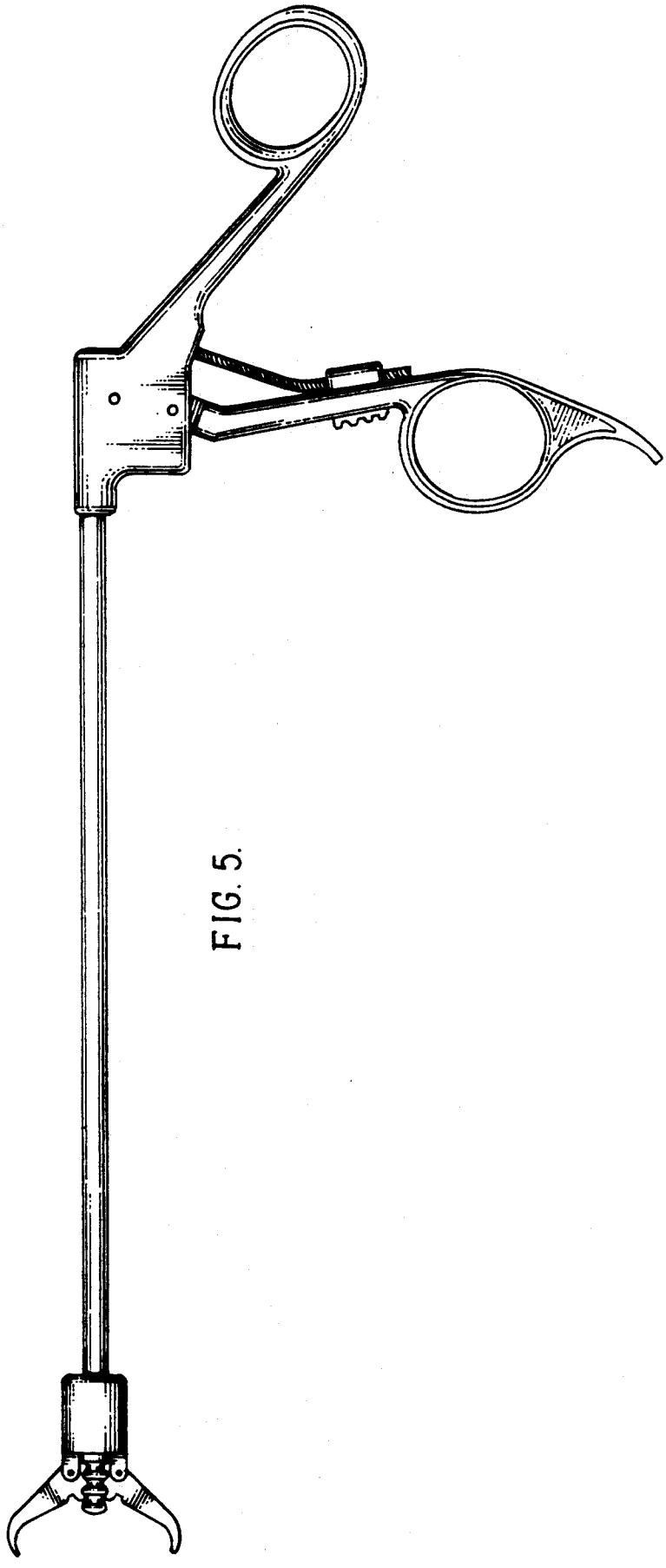

FIG. 5.

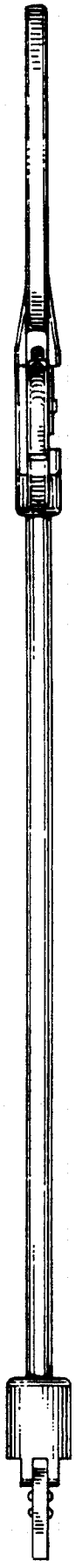

FIG. 6.