(19) Europäisches Patentamt
European Patent Office
Office européen des brevets

(11) Publication number: **0 356 250 B1**

(12) EUROPEAN PATENT SPECIFICATION

(45) Date of publication of patent specification: **01.06.94** (51) Int. Cl.5: **G01N 35/02**, B01L 9/06

(21) Application number: **89308644.7**

(22) Date of filing: **25.08.89**

(54) Analyzers using linear sample trays with random access.

(30) Priority: **25.08.88 US 236588**

(43) Date of publication of application:
28.02.90 Bulletin 90/09

(45) Publication of the grant of the patent:
01.06.94 Bulletin 94/22

(84) Designated Contracting States:
CH DE FR GB IT LI SE

(56) References cited:
EP-A- 0 035 320
EP-A- 0 219 802
EP-A- 0 223 002
EP-A- 0 325 101
WO-A-85/01642
DE-U- 8 811 948
FR-A- 2 089 410
JP-A- 191 060
US-A- 3 586 546
US-A- 3 985 507
US-A- 4 483 927

(73) Proprietor: **EASTMAN KODAK COMPANY**
343 State Street
Rochester New York 14650-2201(US)

(72) Inventor: **Shaw, James David c/o Eastman Kodak Company**
Patent Department
343 State Street
Rochester New York 14650(US)

(74) Representative: **Phillips, Margaret Dawn et al**
Kodak Limited
Patent Department
Headstone Drive
Harrow, Middlesex HA1 4TY (GB)

Note: Within nine months from the publication of the mention of the grant of the European patent, any person may give notice to the European Patent Office of opposition to the European patent granted. Notice of opposition shall be filed in a written reasoned statement. It shall not be deemed to have been filed until the opposition fee has been paid (Art. 99(1) European patent convention).

EP 0 356 250 B1

Description

This invention relates to analyzers for liquid analytes, and more specifically to means for supplying patient sample to such analyzers.

Analyzers conventionally require that patient sample be brought into operative association, such as by aspiration and dispensing, with test reagents, which can be in a dried test element. This operative association usually is called a metering operation. If disposable tips are used for the aspiration and dispensing, those tips are a further component that needs to be brought to the metering operation. The key component to the metering operation is aspirating and dispensing means, such as an automated pipette connected to means for evacuating and pressuring the pipette in alternating sequences.

One method of bringing the disposable tips, patient sample, and test elements "to" the pipette station is shown in U.S. Patent No. 4,287,155, especially Figure 3. In such an arrangement, the sample is transferred to open containers that are arranged on a rotating turntable (which may have four segments) in an arc. In another arc at a different radius on that turntable are placed disposable tips, so that the pipette first traverses to a position above the tips, lowers to pick up a tip, rises back to a traverse position, traverses to a position above the open sample containers, and lowers for aspiration. Thereafter the pipette traverses to another location to dispense sample onto a test element.

Such an arrangement has been very effective in analyzers that have been outstanding in the field of clinical chemistry. There are some aspects, however, which can be further improved. One of these is that the rotating turntable necessarily occupies much more volume than just that taken up by the arcuate arrangement of sample containers or of disposable tips. Therefore, the turntable is not very space-efficient nor does it allow for other turntables to be closely associated therewith. Another aspect for improvement is that each turntable necessarily limits its usefulness to there being an adequate number of disposable tips present for each sample container. If this is not the case, the analyzer sequence must be interrupted to provide extra tips, and such tips can be supplied only while an interrupt is in effect.

Still another area of improvement is to provide an analyzer that will allow STAT (emergency) samples to be taken out of turn. Patient samples taken sequentially off a rotating turntable do not readily provide such a capability. Because of that, the prior turntable arrangement has induced operators to attempt to manually insert STAT samples in the turntable "close to" the position being aspirated. This not only creates a hazard to the operator but it can interfere with the automatic operation of the analyzer, particularly if the manual insertion fails in any respect.

Therefore, prior to this invention, there have been problems in constructing an analyzer with sample supply means that are more efficient in their use of space; accommodate additional, separately loadable sample supply means side-by-side; are independent of the supply of disposable tips; and/or allow for more random sampling of containers.

There have been some attempts at compacting trays of patient sample into linear arrays, so that a tray can be fed past a bar code reader to a metering station. For example, U.S. Patent No. 4,727,033 teaches such an arrangement, using trays or racks 22, Figure 2. However, in this arrangement, there is only one linear track (track 25) that is disposed to intersect the path of traverse of the metering pipette 32. As a result, the trays have to be mounted for movement into and out of the track 25 position. This in turn means that each tray is tied to, or in series with, the other trays, all in a track 20 that runs perpendicular to track 25. Thus, not only do all the trays have to be conveyed in a direction other than the operative one that intersects the metering pipette, but in addition there is no provision for removal of a tray from the sequence, until the tray reaches the end of track 20. There is no recognition in that patent that trays would benefit from being independently operable, such as would occur if each tray had its own separate track. That is, an individual tray containing a STAT sample cannot be taken out of order since the trays can be fed to track 25 only one at a time, in order. Furthermore, no provision is made to provide the pipette with disposable tips of any kind, let alone in a way that renders the supply of tips independent from the supply of patient sample.

The above problems are addressed by an analyzer designed to provide the desired improvements noted above.

More specifically, in one aspect of the present invention the above problems are addressed by an analyzer comprising:-

sample supply means for supplying patient sample;

supply means for supplying test elements;

aspirating and dispensing means for aspirating a sample from said sample supply means and dispensing the sample on to a test element; and

moving means for moving said aspirating and dispensing means in the analyzer relative to said sample supply means along a predetermined path and into operative association with said sample supply means and a test element respectively;

characterized in that said sample supply

means comprise a) a plurality of trays each comprising holding means for holding a plurality of sample containers in a linear array, b) a separate linear track for each of said trays, in which said trays are mounted, and c) reciprocating means for reciprocating each of said trays within its respective track and to a position that intersects said path of said aspirating and dispensing means.

It is an advantageous feature of the invention that an analyzer is provided with patient samples that can be randomly accessed in trays that are independently moved within the analyzer.

Another advantageous feature of the invention is that a more compact supply of patient sample is provided, by means that are independent of the supply of disposable tips.

The present invention will now be described by way of example with reference to the accompanying drawings in which:

Figure 1 is a front elevational view of an analyzer constructed in accordance with the invention;

Figure 2 is a side elevational view, partially broken away, of the analyzer of Figure 1;

Figure 3 is a fragmentary elevational view from the side opposite to that of Figure 2, partially in section;

Figure 4 is a fragmentary perspective view of one of the conveyors of the analyzer, shown exploded in part, for clarity;

Figure 5 is a fragmentary perspective view of the mounting of the aspirating and dispensing station;

Figure 6 is a plan view of the analyzer of Figure 1;

Figure 7 is a partially schematic, elevational view of the conveyor of Figure 4, showing also an optional stopper remover;

Figure 8A is a fragmentary perspective view of a tray of the invention;

Figure 8B is an elevational view in transverse section of the tray of Figure 8A;

Figure 9 is an elevational view similar to that of Figure 2, but of an alternative embodiment;

Figure 10 is a fragmentary perspective view, partly schematic, of the dispensing of liquid onto a test element in the analyzer; and

Figure 11 is a fragmentary perspective view of the driving mechanism for a bar code reader in the analyzer.

This invention is described particularly in connection with an analyzer that dispenses patient liquid onto a dried test element in which reagents are preincorporated. In addition, it can be used in an analyzer that tests for analytes using a liquid medium, in a cuvette, or using any other test environment.

Directions such as "up", "down", "under" and "bottom" as used herein refer to the orientations of the parts as used in their normal operation.

Preferably, Figures 1 and 2, an analyzer 20 constructed in accordance with the invention comprises a patient supply module 22 and a test element module 24. Attached to the analyzer and comprising a part of its I/O (input/output) capabilities, are a keyboard 26 and a display screen 28, both conventional. The primary function of module 22 is to provide a plurality of patient samples, in containers C mounted in trays 10.

Trays 10, Figures 8A and 8B, comprise two opposed, generally vertical side walls 12, 12', and a bottom wall 14 and end walls 16 connecting these walls. The side walls, by extending the length of the tray, provide the major dimension of the tray and hold the containers in a linear array. Ribs 17, Figure 8A, separate the containers in the array, and are sized to accommodate a particular sized container. A majority of the surface area of each side wall 12 and 12' is removed, that is, is cut out at 18, so as to allow gripping access to a container inside, as described hereinafter. Preferably, a flag 19, Figure 8B, is provided on a side wall 12 or 12', or another wall of the tray for sensing the location of the tray. A depression 21 (Figure 8B) in bottom wall 14 aids in seating containers C.

Each of these trays is preferably linear and is mounted in a separate track 32-35 (Figure 1).

Linear trays for holding a plurality of sample containers are known from FR-A-2089410 and WO-A-8501642. Such trays have means which engage with moving means for transporting the trays. Each track has any suitable reciprocating means, such as a conveyor belt 40, Figures 2 and 3, mounted on belt wheels 42, 42'. Each belt 40 preferably does not extend the full depth of the analyzer, but rather stops at the plane marked "A", Figure 2. This is to accommodate a stopper remover, which is optional, discussed below. Belts 40 can be of any convenient construction, such as those that engage trays 10 by friction. In the pairs of belt wheels 42, 42' that drive each belt, one is preferably secured to a drive pulley 44, Figure 3, driven in a conventional manner such as by a belt or chain 46 and a suitable motor 47 mounted between wheels 42, 42' on a frame member 48, 48', 48", and 48"', respectively.

To reciprocate each of the trays 10 beyond its track provided by conveyors 40 and beyond plane A, a single conveyor 50 is provided, Figures 2 and 3, on a movable cart 70, Figures 3 and 4. It is this conveyor that brings a tray and each of its containers into an intersecting position with the path of movement of an aspirating and dispensing station 100, described hereinafter. More specifically, conveyor 50, Figure 3, is reciprocated for conveying

trays in a direction 52 that parallels the conveying directions 54 of conveyor belts 40, by means of belt wheels 56 and 58, one of which is conventionally driven. Most preferably, belt 50 has teeth 60 on both sides thereof. The underside teeth engage the belt wheels, and the upperside teeth engage suitable top lands and grooves in trays 10, to insure positive drive to the tray as it comes from one of the tracks 32-35. See for example grooves 62 and top lands 64 in tray 10 of Figure 8B.

Because single conveyor 50 is to serve the needs of all the tracks 32-35, conveyor 50 is mounted for movement in a direction transverse or perpendicular to direction 52. That is, conveyor 50 and belt wheels 56, 58 are driven on axles 66 that are Journalled in cart 70 that rides, via bearings, not shown, on a rail 72, Figure 4. Rail 72 is fixed in the analyzer so as to be generally perpendicular to tracks 32-35. Cart 70 in turn comprises generally parallel plates 74 held by a cross-bar 76 (shown exploded in Figure 4 for clarity). Each of the plates 74 is connected to an end of a drive cable 78 driven by a drive wheel 80 and motor 82. The front end of cart 70 optionally mounts a stopper remover as described hereinafter, of which only actuating portion 158 is shown in Figure 4. Wheel 84 is an idler wheel for cable 78.

In this fashion, conveyor 50 is moved into position to convey a tray 10 beyond any of tracks 32-35, that is, beyond the conveyor 40 of such tracks. Movement of cart 70 to such position is coordinated by a microcomputer in the analyzer, not shown, so that conveyor 50 is in place to receive a tray that is to cooperate with the aspirating and dispensing station 100.

Station 100, as best seen in Figure 5, is mounted on a truck 102 that rides via bearings, not shown, on a rail 104 fixed to the analyzer. Truck 102 carries with it a conventional automated aspirating and dispensing pipette 105 of the type described in, e.g., U.S. Patent Nos. 4,287,155 and 4,340,390, also of the type conventionally found in the analyzer available from Eastman Kodak Company under the trademark "Ektachem 400" or "Ektachem 700". Such a pipette has a probe portion 106 designed to removably attach to a disposable tip T, supplied from a rack 130 hereinafter described. Tips T then are inserted into a container C to aspirate liquid into the tip. Accordingly, rail 104 permits truck 102 to reciprocate, arrow 108, along a path 110 that intersects conveyor 50 and a tray 10 positioned thereon, as well as the rack 130, and a test element station (not shown in Figure 5) described hereinafter. To move truck 102 along path 110, a cable 112 is connected to the truck and is driven by pulley 114 (and idler pulley 116) and motor 118. A suitable card and ribbon cable 120 connect motor 122 of pipette 105 to the microprocessor of the analyzer.

To ensure that enough disposable tips are provided for the patient sample of any tray 10, a rack 130 of tips T is provided, and a conveyor 132, Figure 1, to move the rack in a direction 134, Figure 5, generally parallel to conveying direction 52 of conveyor 50. Preferably, sensors such as optical sensors 135, Figure 3, are provided to ensure that a tip T is present in a particular aperture of rack 130 over which pipette 105 is positioned to descend to pick up a tip, Figure 5. Rack 130 can be of any convenient construction.

Alternatively, an endless conveyor (not shown) of apertured links can be used, so that an operator continually fills the apertures of the links with tips, at a position outside of the analyzer.

Optionally, and preferably, a bar code reader 140, Figures 2 and 3, is mounted for reciprocation to positions closely adjacent any of the tracks 32-35, to read bar code labels L (Figure 8A) on each container C as the tray on the appropriate track is moved past it. The reader is a conventional reader mounted on a rail and driven by means similar to those provided for station 100. That is, Figure 11, reader 140 is mounted on a truck 141 that slides over a linear rail 142 on bearings (not shown). Truck 141 is driven by a cable 139, a drive pulley 143 and a drive motor 144. A portion of cable 139 passes above and in front of rail 142 while another portion is fixed to the truck 141 at 145. (An idler pulley 146 completes the drive assembly.) As will be readily apparent, rail 142 extends generally perpendicularly to the direction of movement 54 of belts 40. Sensors 147 are fixed to the analyzer to detect a flag 148 on truck 141 to provide feedback to motor 144. In this manner, movement of truck 141 along rail 142 is halted at the proper position adjacent a belt 40 to allow scanning, using beam 149. After truck 141 is located adjacent the track of the tray to be read, that tray moves from position "X_1", Figure 3, to position "X_2". When the last container C^1 clears reader 140, the tray 10 is not yet in position to engage conveyor 50 when the latter is moved into alignment with that track.

To allow stoppered containers C to be placed in trays 10, analyzer 20 optionally includes a stopper remover 150 that is carried on cart 70, Figures 4 and 7. Any automated stopper remover is useful, for example, the one described in Japanese Kokai 62/6171. Preferably, such a device includes two tube grippers 152, 154 pivoted on arms 156 via controls 158 mounted on the front of cart 70, and a stopper gripper 160 that includes drive means for removing the stopper (not shown). Most preferably, gripper 160 is mounted on a vertical post 162 and cantelevered arm 164 that pivot via controls 165 so as to move gripper 160 and the removed stopper to a location 166 (shown in phantom, Figure 7) off

path 110, Figure 6. In this fashion, gripper 160 will not block the movement of truck 102 and pipette 105 as the latter move along path 110 to aspirate from the container that has been unstoppered. Arms 156 also preferably are movable in the direction of arrows 169, Figure 7, to raise tube C, arrow 170, Figure 8B, to bring the stopper into engagement with gripper 160. Preferably, both sides 12 and 12' of trays 10 are open to allow grippers 152, 154 to grip an individual tube.

Trays 10 preferably include a flag 19 as described, and another flag, not shown, which is sensed by truck 102 as pipette 105 moves into position for aspiration.

Alternatively, stopper remover 150 can be dispensed with altogether, as when the containers are placed in trays 10 already unstoppered. That alternative is shown in Figure 9, in which parts similar to those previously described bear the same reference numeral, to which the distinguishing suffix "a" is appended. In this embodiment, each track 32a-35a (only one being shown) and its conveyor 40a is effective in reciprocating the respective tray 10a to the position (X_3) that intersects path 110a of aspirating and dispensing station 100a. That is, second conveyor 50 and its perpendicularly-moving cart 70 are not needed. Bar code reader 140a may or may not be present.

It will be readily apparent from the aforesaid description that a very compact supply of patient sample is provided, in a manner that encourages more random access than has been heretofore possible. That is, Figure 3, while a container of tray 10 from track 32 is being aspirated, reader 140 can be reading tray 10 of any one of the other tracks 33-35. If such reader 140 detects that one of the containers of a tray on, for instance track 33 (Figure 1), has a STAT sample, as soon as aspiration and dispensing is completed on the container in progress, tray 10 of track 32 is returned to its track (by conveyor 50 reversing to feed the tray back to conveyor 40 of track 32, also reversed.) Then, tray 10 of track 33 is moved (not shown) onto conveyor 50 (which has been moved into alignment with track 33 from track 32). Conveyor 50 continues to advance this tray until the STAT container intersects path 110. While this is taking place, stopper remover 150 is readied, and the stopper (if any) is then removed. Gripper 160 is pivoted out of the way, and station 100 is moved into place on path 110 to engage the STAT container.

The aforesaid construction, by providing each tray with its own track extending towards the path of the aspirating and dispensing station, avoids the necessity of moving all the trays lock-step along a path perpendicular to that extending track until a tray lines up with such track.

The rest of the operation of the analyzer is conventional, being directed to the dispensing of patient sample onto a test element E, Figure 10, and the incubating and reading of such an element. Any suitable arrangement can be used for these functions. For example, the following, supplied for completeness, is useful: A supply 200 of elements is provided, and one of such elements E is ejected, arrow 202, onto a platform 204. Station 100 then traverses out of module 22, Figure 1, into module 24 (arrow 206), and the pipette is moved down (arrow 208, Figure 10) to a position directly above element E, at which time dispensing occurs. Element E is then conventionally pushed into any suitable incubator 210, and read colorimetrically or potentiometrically at a suitable read station, not shown.

Additional useful features of this invention include:

When any tray 10 is completed with all sample having been aspirated as sensed by sensor 250, Figures 3 and 4, on cart 70, conveyor 40 returns it to a protruding position, shown in phantom, Figure 3, that informs the operator that it can be removed.

A cover 220 (Figure 3) is provided, which is slotted at 222 so as to expose any tray only when it first enters (or last exits) its track. All trays at station 100 are inaccessible to the operator, thus eliminating the temptation of operators to place STAT containers close to the aspirating and dispensing station. To permit non-routine access to the interior for repairs, such as by the site administrator, cover 220 is held in the position shown by a lock (not shown), and when unlocked, pivots out of its blocking position, arrow 260.

Claims

1. An analyzer (20) comprising:-

sample supply means (22) for supplying patient sample;

supply means (200) for supplying test elements (E);

aspirating and dispensing means (100, 105, 106, 122) for aspirating a sample from said sample supply means (22) and dispensing the sample on to a test element (E); and

moving means (102, 104, 112, 114, 116, 118) for moving said aspirating and dispensing means (100, 105, 106, 122) in the analyzer relative to said sample supply means (22) along a predetermined path (110) and into operative association with said sample supply means (22) and a test element (E) respectively;

characterized in that said sample supply means (22) comprise a) a plurality of trays (10) each comprising holding means (12, 12', 14,

16, 17, 21) for holding a plurality of sample containers (C, C') in a linear array, b) a separate linear track (32, 33, 34, 35) for each of said trays (10), in which said trays (10) are mounted, and c) reciprocating means (40, 42, 44, 46, 47, 50, 56, 58, 60) for reciprocating each of said trays (10) within its respective track (32, 33, 34, 35) and to a position that intersects said path (110) of said aspirating and dispensing means (100, 105, 106, 122).

2. An analyser as defined in claim 1, wherein said reciprocating means (40, 42, 44, 46, 47, 50, 56, 58, 60) includes 1) sensing means (147, 148) for sensing when the last container (C') of a tray (10) has been aspirated, and 2) means for ejecting said emptied tray at least partially from its respective track to indicate an "empty" condition.

3. An analyzer as defined in claim 1 or 2, further including detecting means (140, 149) for detecting patient identification (L) on said containers (C, C') in each tray (10) as said each tray (10) is reciprocated along its respective track (32, 33, 34, 35).

4. An analyzer as defined in claim 3, wherein said detecting means (140, 149) is mounted on a track (142) that passes over said tray tracks (32, 33, 34, 35), and further including means (139, 141, 143, 144, 146) for moving said detecting means (140, 149) along its track (142) from one tray track (32, 33, 34, 35) to another.

5. An analyzer as defined in claim 4, wherein said track (142) of said detecting means (140, 149) and said path (110) of said aspirating and dispensing means (100, 105, 106, 122) are separate but generally parallel to one another.

6. An analyzer as defined in any one of the preceding claims, further including tip supply means (130, 132, 135) comprising a rack (130) of disposable tips (T) separate from said trays (10), means (132) for moving said rack (130) past said path (110) of said aspirating and dispensing means (100, 105, 106, 122), and means (135) for sensing a tip (T) in said rack (130) prior to said aspirating and dispensing means (100, 105, 106, 122) moving into association with said tip supply means (130, 132, 135) to pick up said sensed tip (T).

7. An analyzer as defined in any one of the preceding claims, wherein said tracks (32, 33, 34, 35) are generally parallel to each other, and said path (110) of said aspirating and dispensing means (100, 105, 106, 122) intersects each of said tracks (32, 33, 34, 35) at an angle of about 90°.

8. An analyzer as defined in any one of the preceding claims, wherein said reciprocating means (40, 42, 44, 46, 47, 50, 56, 58, 60) include conveyors (40, 42, 44, 46, 47) for each of said tracks (32, 33, 34, 35), and a separate conveyor (50, 60) mounted for a) conveying trays (10) in a direction that is generally parallel to the direction of conveyance of any of said conveyors (40, 42, 44, 46, 47), and b) reciprocation in a generally perpendicular direction to said directions and along said path (110) of movement of said aspirating and dispensing means (100, 105, 106, 122), and means (56, 58) for reciprocating said separate conveyor (50, 60) in said perpendicular direction.

9. An analyzer as defined in claim 8, wherein said separate conveyor (50, 60) includes means (60) for interlocking with portions of any of said trays (10) so as to positively drive said trays (10) away from said conveyors (40, 42, 44, 46, 47) of said tracks (32, 33, 34, 35).

10. An analyzer as defined in any one of the claims 1 to 7, wherein said reciprocating means (40, 42, 44, 46, 47, 50, 56, 58, 60) comprise first conveyors (40) for each of said tracks (10) and a second conveyor (50, 60) positioned beyond said tracks (32, 33, 34, 35) for conveyance of trays (10) in a direction parallel to said tracks (32, 33, 34, 35), means (42, 44, 46, 47) for moving said first conveyors (40) along said tracks (32, 33, 34, 35), and means (56, 58) for moving said second conveyor (50, 60) transversely to said direction, to a position in which it is alternately aligned with any one of said tracks (32, 33, 34, 35).

11. An analyzer as defined in any one of the preceding claims, further including protective cover means (220) for preventing normal operator access to said aspirating and dispensing means (100, 105, 106, 122) and to at least a portion of said tracks (32, 33, 34, 35).

Patentansprüche

1. Analysegerät (20) mit
   - einer Proben-Bereitstellungseinrichtung (22) zum Zuführen von Patientenproben;
   - einer Reagenzträger-Bereitstellungseinrichtung (200) zum Zuführen von Reagenzträgern (E);

- einer Entnahme- und Abgabeeinrichtung (100, 105, 106, 122) zum Entnehmen einer aus der Proben-Bereitstellungseinrichtung (22) zugeführten Probe und Aufbringen derselben auf einen Reagenzträger (E); und
- einer Bewegungseinrichtung (102, 104, 112, 114, 116, 118) zum Bewegen der innerhalb des Analysegerätes angeordneten Entnahme- und Abgabeeinrichtung (100, 105, 106, 122) entlang einer relativ zur Proben-Bereitstellungseinrichtung (22) und zwischen Proben-Bereitstellungseinrichtung (22) und Reagenzträger (E);

dadurch gekennzeichnet, daß die Proben-Bereitstellungseinrichtung (22) folgende Komponenten umfaßt;

a) eine Vielzahl von Probenträgern (10), von denen jeder Haltemittel (12, 12', 14, 16, 17, 21) für die Aufnahme einer Vielzahl von Probenbehältern (c, c') in linearer Anordnung aufweist,

b) Linearführungen (32, 33, 34, 35), auf die die Probenträger (10) aufbringbar sind,

c) Mittel (40, 42, 44, 46, 47, 50, 56, 58, 60) zum Vorund Rückbewegen der Probenträger entlang ihrer jeweiligen Linearführungsbahn (32, 33, 34, 35) sowie zu deren Verbringung in eine Position, welche die Bewegungsbahn (110) der Entnahme- und Abgabeeinrichtung (100, 105, 106, 122) kreuzt.

2. Analysegerät nach Anspruch 1, dadurch gekennzeichnet, daß die Mittel (40, 42, 44, 46, 47, 50, 56, 58, 60) zum Vor- und Rückwärtsbewegen der Probenträger (10) folgende Komponenten aufweisen:

1) Fühler (147, 148) zum Erfassen, ob aus dem letzten Probenbehälter (C') eines Probenträgers (10) eine Probe entnommen worden ist, und

2) Mittel, die den entleerten Probenträger zumindest teilweise aus seiner Führung werfen und einen "Leer"-Zustand anzeigen.

3. Analysegerät nach Anspruch 1 oder 2, gekennzeichnet durch eine Einrichtung (140, 149), welche den auf den Probenbehältern (C, C') jedes Probenträgers (10) angebrachten Patientenkode (L) bei der Vor- und Rückwärtsbewegung jedes Probenträgers (10) in seiner Führung (32, 33, 34, 35) identifiziert.

4. Analysegerät nach Anspruch 3, dadurch gekennzeichnet, daß die Einrichtung (140, 149) an einer Führung (142) angeordnet ist, die sich über die Linearführungen (32, 33, 34, 35) der Probenträger (10) bewegt, und daß Mittel (139, 141, 143, 144, 146) vorgesehen sind, welche die Einrichtung (140, 149) entlang der Führung (142) von einer Linearführung (32, 33, 34, 35) zur nächsten bewegen.

5. Analysegerät nach Anspruch 4, dadurch gekennzeichnet, daß die Führung (142) der Einrichtung (140, 149) und die Bewegungsbahn (110) der Entnahme- und Abgabeeinrichtung (100, 105, 106, 122) voneinander beabstandet sind, jedoch im wesentlichen parallel zueinander verlaufen.

6. Analysegerät nach einem der vorhergehenden Ansprüche, gekennzeichnet durch eine Einrichtung (130, 132, 135) zum Zuführen von Einweg-Pipettenspitzen (T), die aus einem von den Probenträgern (10) getrennten Traggestell (130), Mitteln (132) zum Vorbeibewegen des Traggestells (130) an der Bewegungsbahn (110) der Entnahme- und Abgabeeinrichtung (100, 105, 106, 122) und Mitteln (135) besteht zum Feststellen, ob sich im Traggestell (130) eine Pipettenspitze (T) befindet, bevor sich die Entnahme- und Abgabeeinrichtung (100, 105, 106, 122) in die Position bewegt hat, in der sie aus der Pipettenspitzen-Zuführeinrichtung (130, 132, 135) diese Pipettenspitze entnimmt.

7. Analysegerät nach einem der vorhergehenden Ansprüche, dadurch gekennzeichnet, daß die Linearführungen (32, 33, 34, 35) im wesentlichen parallel zueinander verlaufen, und die Bewegungsbahn (110) der Entnahme- und Abgabeeinrichtung (100, 105, 106, 122) jede der Führungsbahnen (32, 33,34, 35) in einem Winkel von etwa 90° kreuzt.

8. Analysegerät nach einem der vorhergehenden Ansprüche, dadurch gekennzeichnet, daß die Mittel (40, 42, 44, 46, 47, 50, 56, 58, 60) Förderbänder (40, 42, 44, 46, 47) für jede der Linearführungen (32, 33, 34, 35) aufweisen, sowie ein gesondertes Förderband (50, 60), das a) die Träger (10) in einer zur Bewegungsrichtung aller Förderbänder (40, 42, 44, 46, 47) im wesentlichen parallel verlaufenden Richtung bewegt und b) sich in einer zu den genannten Richtungen im wesentlichen senkrechten Richtung und entlang der Linearführung (110) der Entnahme- und Abgabeeinrichtung (100, 105, 106, 122) vor- und rückwärts bewegt und Mittel (56, 58), die das gesonderte Förderband (50, 60) in der senkrechten Richtung vor- und rückwärts bewegen.

9. Analysegerät nach Anspruch 8, dadurch gekennzeichnet, daß das gesonderte Förderband (50, 60) Mittel (60) aufweist, die in Bestandteile der Probenträger (10) eingreifen, um diese von den Förderbändern (40, 42, 44, 46, 47) und den Linearführungen (32, 33, 34, 35) fortzuschieben.

10. Analysegerät nach einem der Ansprüche 1 bis 7, dadurch gekennzeichnet, daß die Mittel (40, 42, 44, 46, 47, 50, 56, 58, 60) ein erstes Förderband (40) für jeden der Probenträger (10) aufweisen und ein zweites, außerhalb der Linearführungen (32, 33, 34, 35) angeordnetes Förderband (50, 60), das die Probenträger (10) in einer zu den Linearführungen (32, 33, 34, 35) parallel verlaufenden Richtung bewegen, Mittel (42, 44, 46, 47), welche die ersten Förderbänder (40) entlang der Linearführungen (32, 33, 34, 35) bewegen, und Mittel (56, 58), die das zweite Förderband (50, 60) quer zu dieser Richtung in eine Stellung bewegen, in der es wahlweise mit einer der Linearführungen (32, 33, 34, 35) in Fluchtung bringbar ist.

11. Analysegerät nach einem der vorhergehenden Ansprüche, gekennzeichnet durch eine Schutzabdeckung (220), die den Zugriff einer Bedienungsperson in den Bereich der Entnahme- und Abgabeeinrichtung (100, 105, 106, 122) und zu mindestens einem Teil der Linearführungen (32, 33, 34, 35) verhindert.

Revendications

1. Analyseur (20) comprenant :

un dispositif (22) d'alimentation en échantillons de patients,

un dispositif (200) d'alimentation en éléments de test (E),

un dispositif d'aspiration et de distribution (100, 105, 106, 122) destiné à aspirer un échantillon provenant du dispositif d'alimentation en échantillons (22) et à distribuer l'échantillon sur l'élément de test (E), et

un dispositif (102, 104, 112, 114, 116, 118) de déplacement du dispositif d'aspiration et de distribution (100, 105, 106, 122) dans l'analyseur par rapport au dispositif d'alimentation en échantillons (22) le long d'un trajet prédéterminé (110) et en coopération de travail avec le dispositif d'alimentation en échantillons (22) et l'élément de test (E) respectivement,

caractérisé en ce que le dispositif d'alimentation en échantillons (22) comporte a) plusieurs plateaux (10) ayant chacun des dispositifs (12, 12', 14, 16, 17, 21) de support de plusieurs récipients d'échantillons (C, C') sous forme alignée, b) une voie linéaire séparée (32, 33, 34, 35) pour chacun des plateaux (10), les plateaux (10) étant montés dans les voies, et c) un dispositif (40, 42, 44, 46, 47, 50, 56, 58, 60) destiné à déplacer en translation chacun des plateaux (10) dans sa voie respective (32, 33, 34, 35) et vers une position qui recoupe le trajet (110) du dispositif d'aspiration et de distribution (100, 105, 106, 122).

2. Analyseur selon la revendication 1, dans lequel le dispositif de déplacement en translation (40, 42, 44, 46, 47, 50, 56, 58, 60) comporte 1) un dispositif (147, 148) de détection du moment où le dernier récipient (C') d'un plateau (10) a subi une aspiration, et 2) un dispositif destiné à éjecter le plateau vide au moins partiellement de sa voie respective afin qu'il indique un état ("vide").

3. Analyseur selon la revendication 1 ou 2, comprenant en outre un dispositif détecteur (140, 149) destiné à détecter l'identification d'un patient (L) placé sur les récipients (C, C') de chaque plateau (10) lorsque chaque plateau (10) se déplace en translation le long de la voie respective (32, 33, 34, 35).

4. Analyseur selon la revendication 3, dans lequel le dispositif de détection d'identification (140, 149) est monté sur une voie (142) qui passe au-dessus des voies (32, 33, 34, 35) des plateaux, l'analyseur comprenant en outre un dispositif (139, 141, 143, 144, 146) de déplacement du dispositif détecteur d'identification (140, 149) le long de sa voie (142), d'une voie d'un plateau (32, 33, 34, 35) à une autre.

5. Analyseur selon la revendication 4, dans lequel la voie (142) du dispositif détecteur d'identification (140, 149) et la voie (110) du dispositif d'aspiration et de distribution (100, 105, 106, 122) sont séparées mais parallèles de façon générale.

6. Analyseur selon l'une quelconque des revendications précédentes, comprenant en outre un dispositif (130, 132, 135) d'alimentation en bouts comprenant un râtelier (130) de bouts jetables (T) séparé des plateaux (10), un dispositif (132) de déplacement du râtelier (130) le long du trajet (110) du dispositif d'aspiration et de distribution (100, 105, 106, 122), et un dispositif (135) de détection d'un bout (T) dans le râtelier (130) avant que le dispositif d'aspiration et de distribution (100, 105, 106, 122) ne se déplace en coopération avec le dispositif d'alimentation en bouts (130, 132, 135) afin

qu'il prélève le bout détecté (T).

7. Analyseur selon l'une quelconque des revendications précédentes, dans lequel les voies (32, 33, 34, 35) sont parallèles les unes aux autres de façon générale, et le trajet (110) du dispositif d'aspiration et de distribution (100, 105, 106, 122) recoupe chacune des voies (32, 33, 34, 35) suivant un angle d'environ 90°.

8. Analyseur selon l'une quelconque des revendications précédentes, dans lequel le dispositif de déplacement alternatif (40, 42, 44, 46, 47, 50, 56, 58, 60) comprend des transporteurs (40, 42, 44, 46, 47) pour chacune des voies (32, 33, 34, 35), et un transporteur séparé (50, 60) monté de manière qu'il assure a) le transport des plateaux (10) en direction parallèle de façon générale à la direction de transport de l'un quelconque desdits transporteurs (40, 42, 44, 46, 47), et b) le déplacement alternatif en direction générale perpendiculaire auxdites directions et le long dudit trajet (110) de déplacement du dispositif d'aspiration et de distribution (100, 105, 106, 122), et un dispositif (56, 58) de déplacement alternatif du transporteur séparé (50, 60) dans ladite direction perpendiculaire.

9. Analyseur selon la revendication 8, dans lequel le transporteur séparé (50, 60) comporte un dispositif (60) de coopération avec des parties de l'un quelconque des plateaux (10) afin que les plateaux (10) soient écartés positivement des transporteurs (40, 42, 44, 46, 47) des voies (32, 33, 34, 35).

10. Analyseur selon l'une quelconque des revendications 1 à 7, dans lequel le dispositif de déplacement en translation (40, 42, 44, 46, 47, 50, 56, 58, 60) comprend des premiers transporteurs (40) pour chacun des plateaux (10) et un second transporteur (50, 60) placé au-delà des voies (32, 33, 34, 35) et destiné à transporter les plateaux (10) en direction parallèle aux voies (32, 33, 34, 35), un dispositif (42, 44, 46, 47) de déplacement des premiers transporteurs (40) le long des voies (32, 33, 34, 35), et un dispositif (56, 58) destiné à déplacer le second transporteur (50, 60) transversalement à cette direction, vers une position dans laquelle il est aligné en alternance sur l'une quelconque desdites voies (32, 33, 34, 35).

11. Analyseur selon l'une quelconque des revendications précédentes, comprenant en outre un couvercle protecteur (220) destiné à empêcher normalement l'accès d'un opérateur au dispositif d'aspiration et de distribution (100, 105, 106, 122) et à une partie au moins des voies (32, 33, 34, 35).

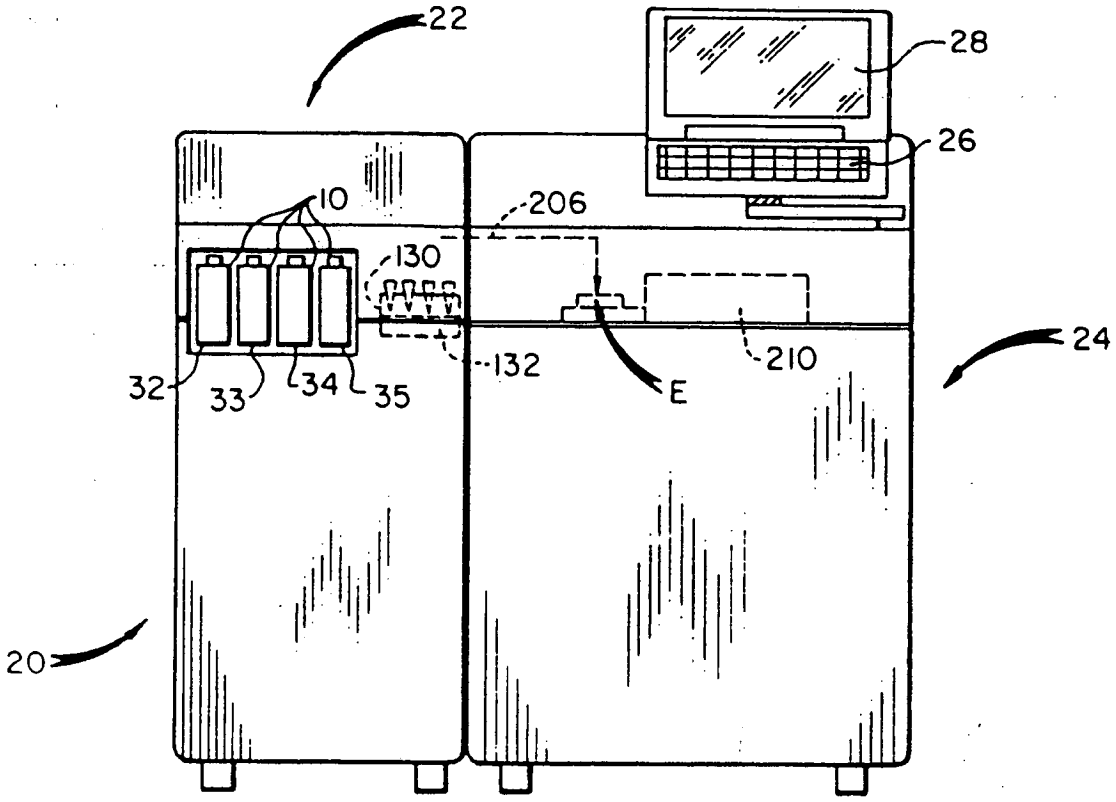
22
28
26
10
206
130
24
132
210
32
33
34
35
E
20

FIG. 1

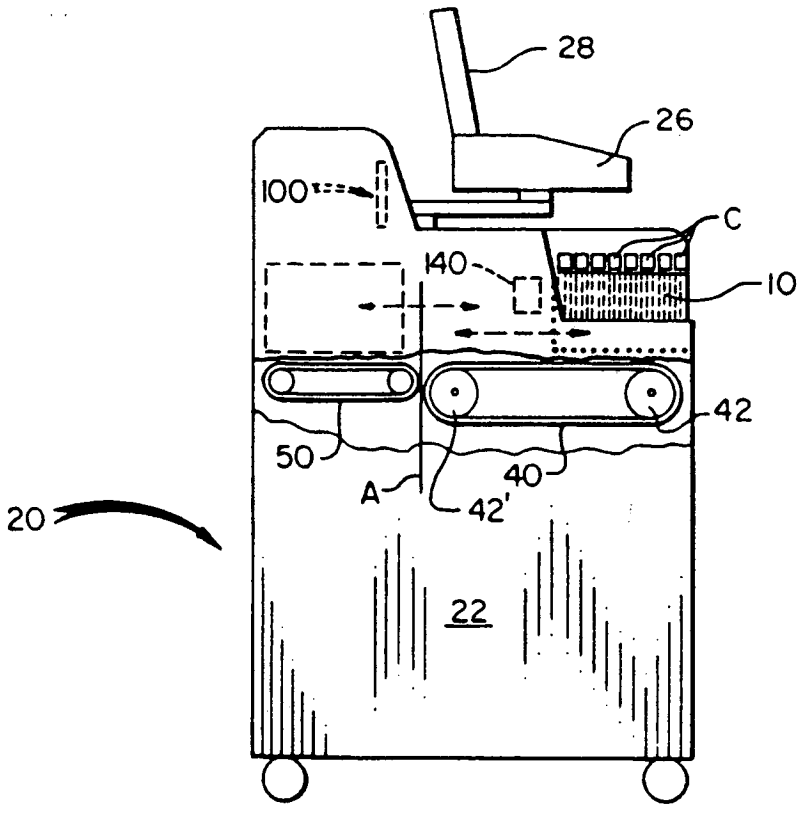
28
26
100
C
140
10
42
50
40
A
42'
20
22

FIG. 2

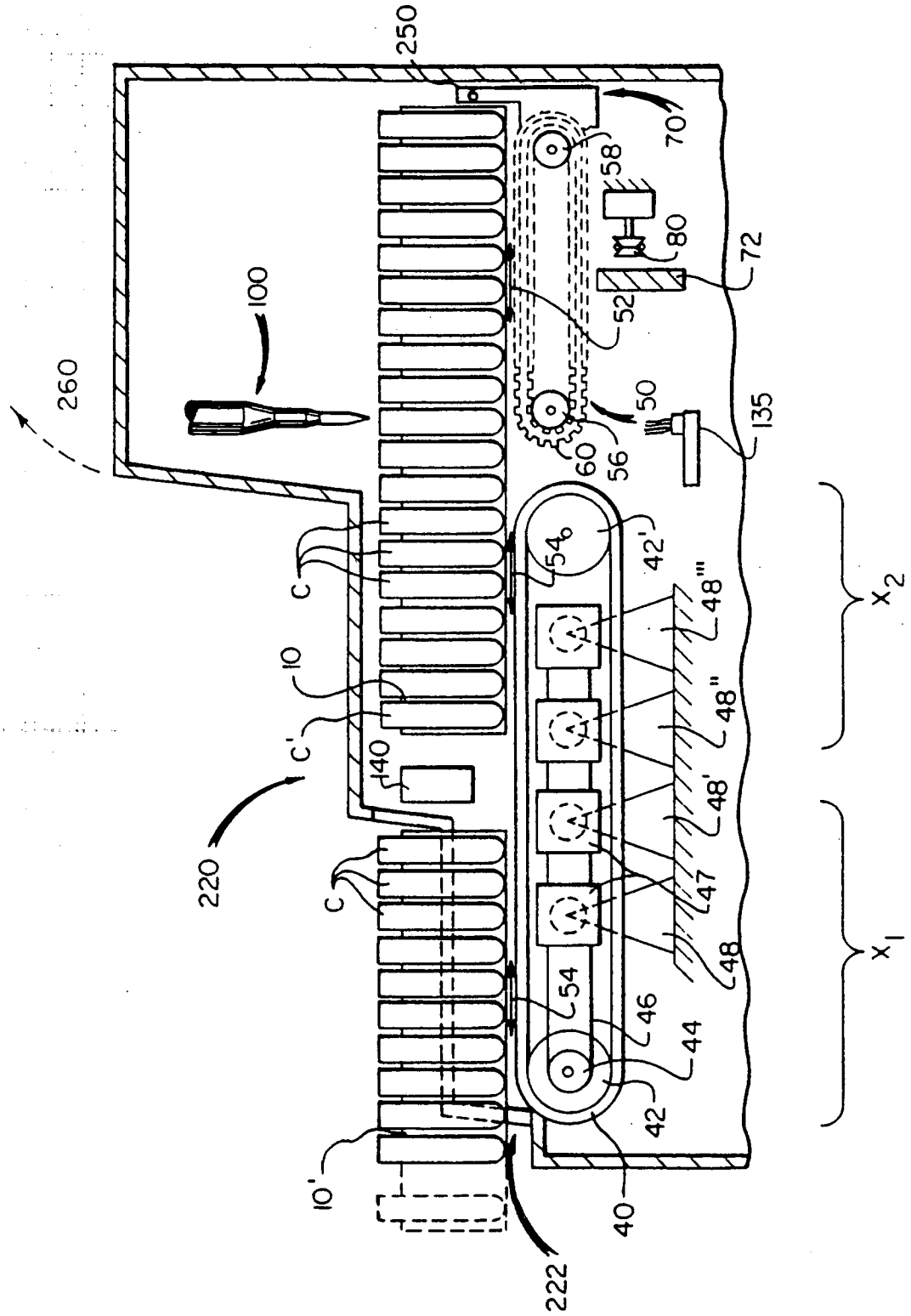
250
70
58
80
72
52
100
260
50
135
60
56
54
42'
48'''
48''
48'
47
48
54
46
44
42
40
C
10
C'
140
220
C
10'
222
X_2
X_1

FIG. 3

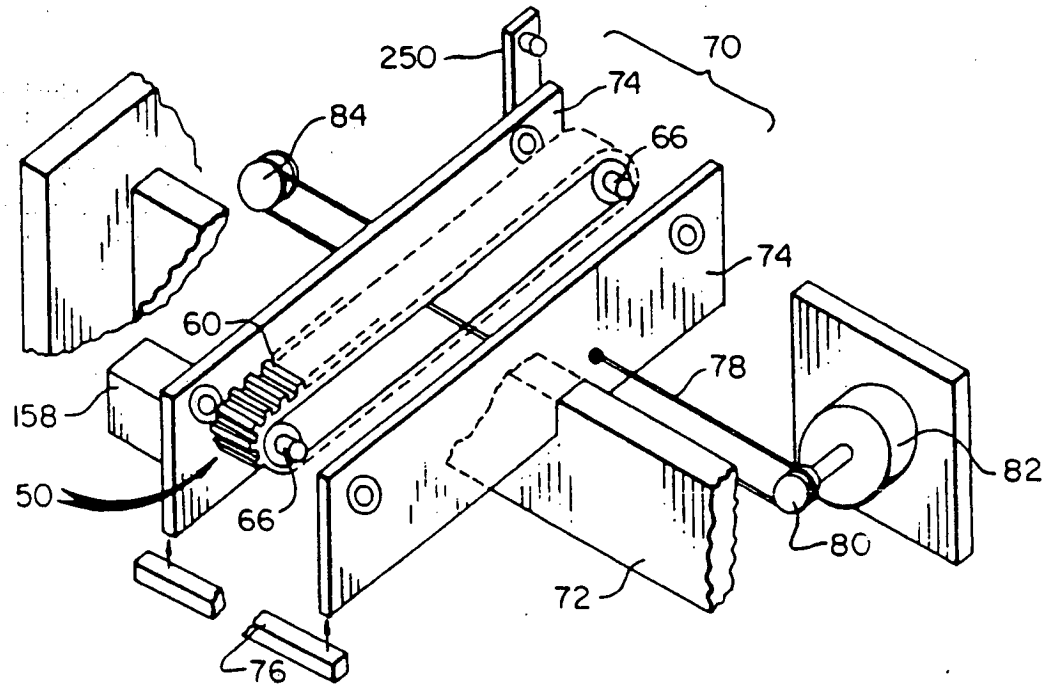
250
70
74
84
66
74
60
78
158
82
50
66
80
72
76

FIG. 4

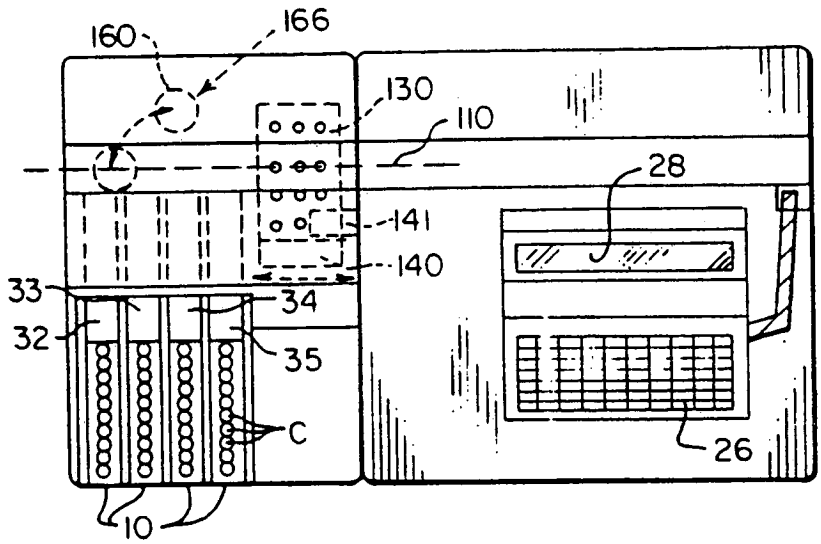
160
166
130
110
28
141
140
33
34
32
35
C
26
10

FIG. 6

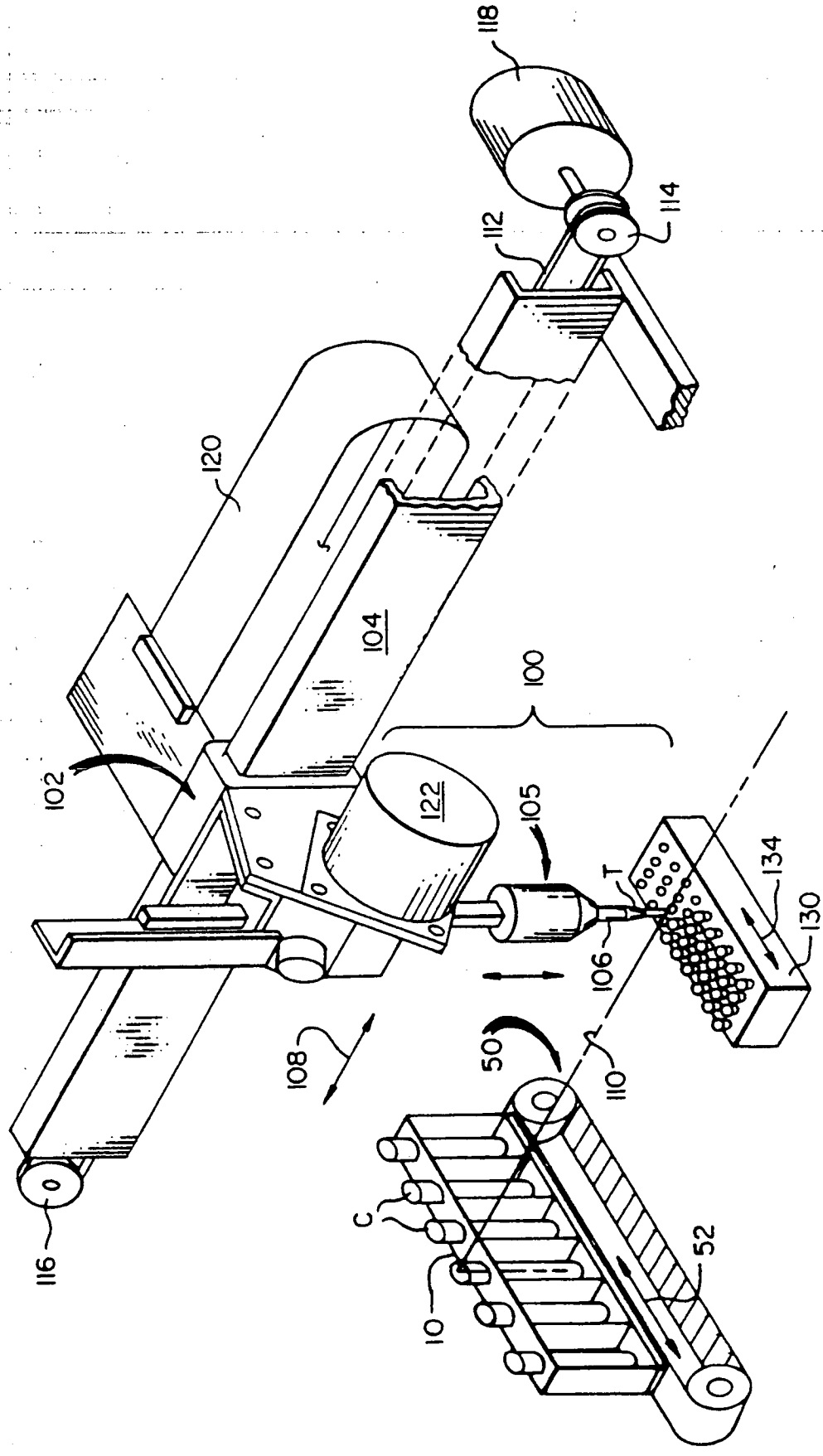
118
114
112
120
104
100
102
122
105
T
134
130
106
108
50
110
116
C
52
10

FIG. 5

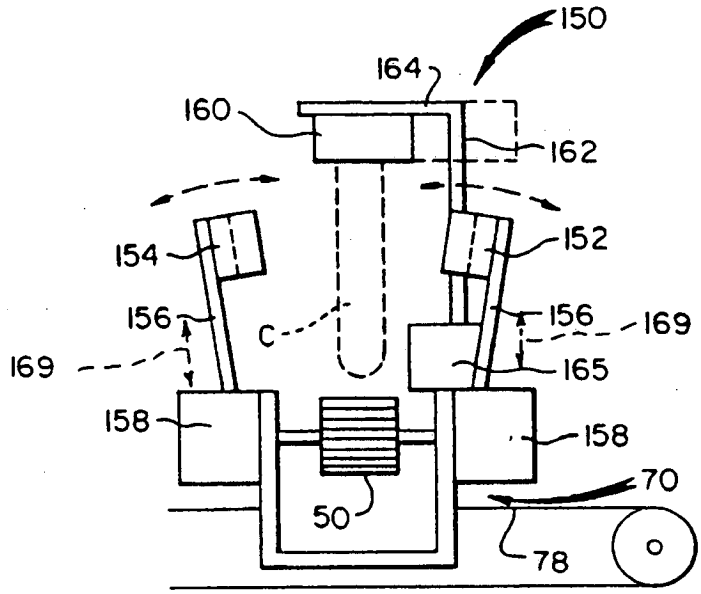

FIG. 7

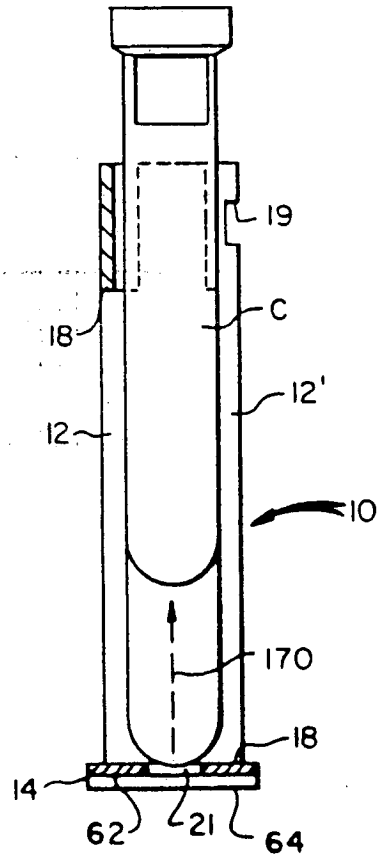

FIG. 8B

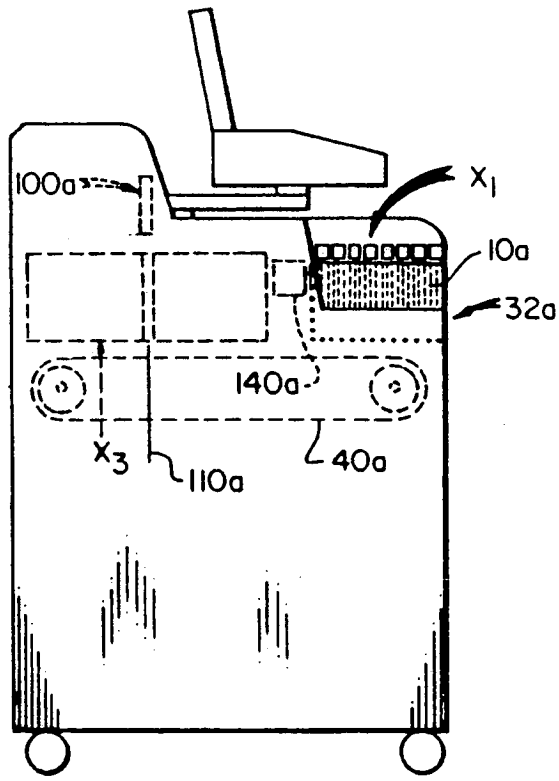

FIG. 9

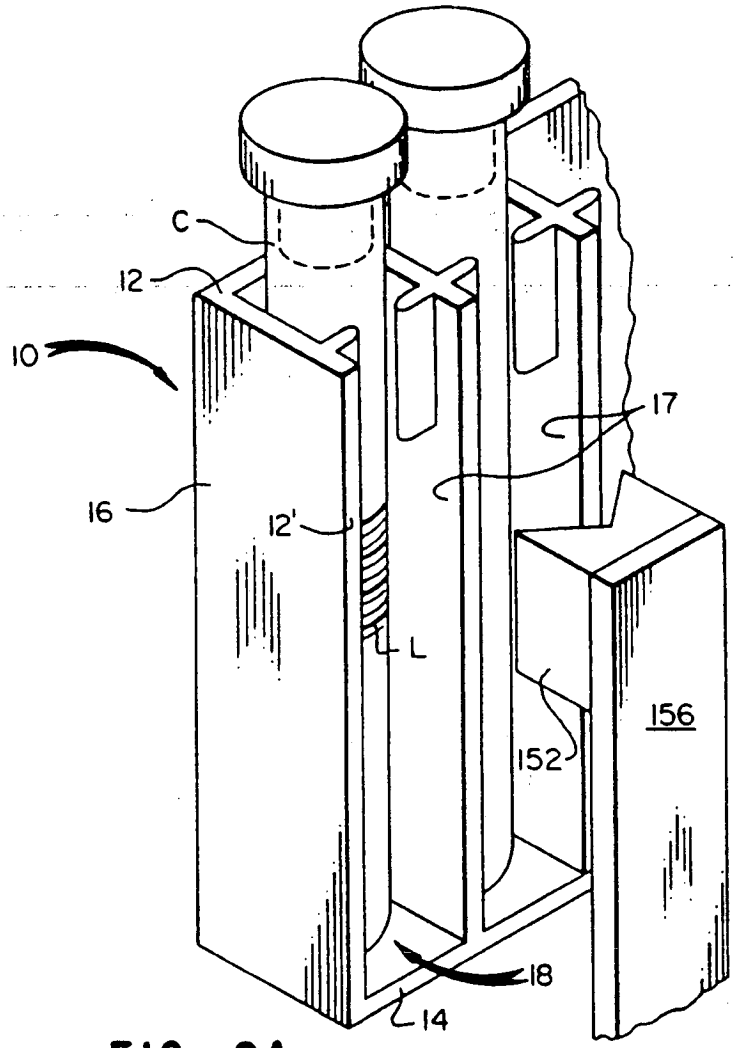

FIG. 8A

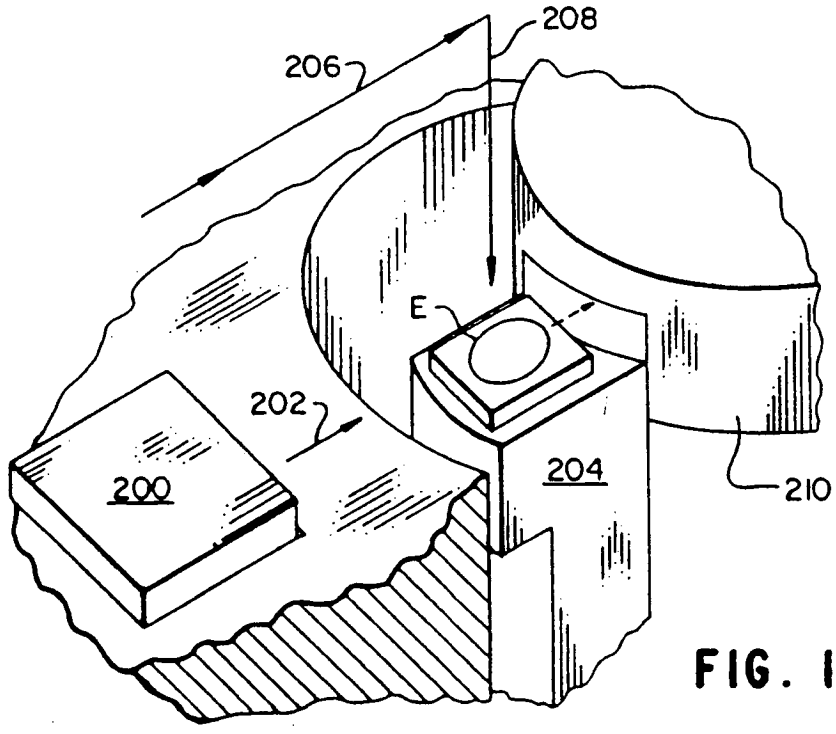

FIG. 10

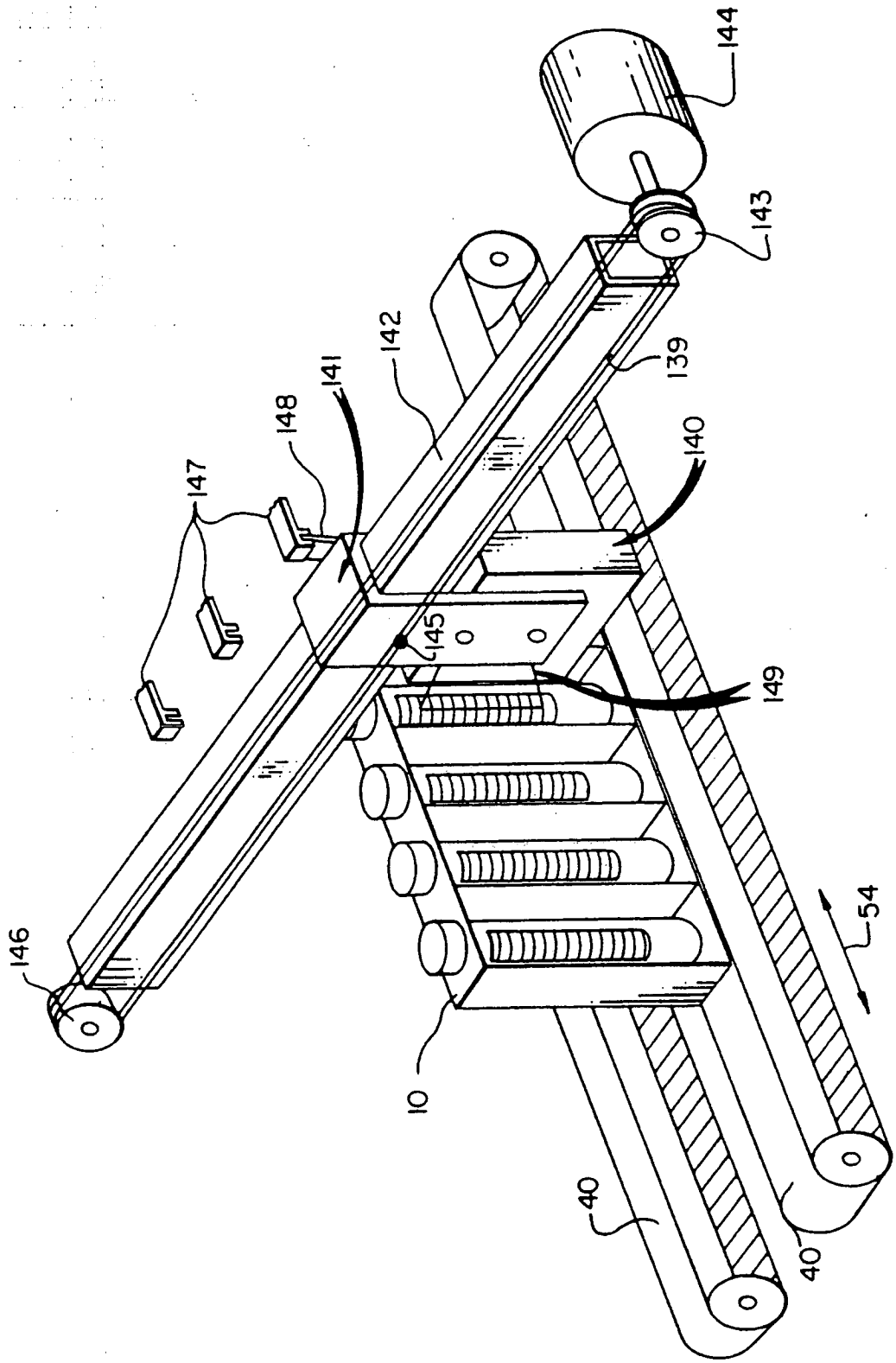

FIG. 11

REGISTER ENTRY FOR EP0356250

European Application No EP89308644.7 filing date 25.08.1989.

Priority claimed:
25.08.1988 in United States of America - doc: 236588

Designated States CH DE FR GB IT LI SE

Title ANALYZERS USING LINEAR SAMPLE TRAYS WITH RANDOM ACCESS.

Applicant/Proprietor
EASTMAN KODAK COMPANY, 343 State Street, Rochester New York 14650, United States of America [ADP No. 56832066001]

Inventor
JAMES DAVID SHAW, c/o Eastman Kodak Company, Patent Department 343 State Street, Rochester New York 14650, United States of America [ADP No. 57242216001]

Classified to
G01N B01L

Address for Service
KODAK LIMITED, Patent Department, Headstone Drive, HARROW, Middlesex, HA1 4TY, United Kingdom [ADP No. 00001024001]

EPO Representative
IAN ELLISON DAVIS, Kodak Limited Patent Department Headstone Drive, Harrow Middlesex HA1 4TY, United Kingdom [ADP No. 50623065001]

Publication No EP0356250 dated 28.02.1990
Publication in English

Examination requested 12.09.1991

Patent Granted with effect from 01.06.1994 (Section 25(1)) with title
ANALYZERS USING LINEAR SAMPLE TRAYS WITH RANDOM ACCESS.

13.02.1990 Notification from EPO of change of EPO Representative details from
IAN ELLISON DAVIS, Kodak Limited Patent Department Headstone Drive, Harrow Middlesex HA1 4TY, United Kingdom [ADP No. 50623065001]
to
MARGARET DAWN PHILLIPS, Kodak Limited Patent Department Headstone Drive, Harrow, Middlesex HA1 4TY, United Kingdom [ADP No. 57283889001]
Entry Type 25.14 Staff ID. RD06 Auth ID. EPT

25.03.1991 EPO: Search report published on 24.04.1991
Entry Type 25.11 Staff ID. RD06 Auth ID. EPT

29.04.1994 KODAK LIMITED, Patent Department, Headstone Drive, HARROW, Middlesex, HA1 4TY, United Kingdom [ADP No. 00001024001]
registered as address for service
Entry Type 8.11 Staff ID. ER1 Auth ID. AA

29.04.1994 Notification from EPO of change of Applicant/Proprietor details
from
EASTMAN KODAK COMPANY, 343 State Street, Rochester New York 14650,
United States of America [ADP No. 56832066001]
to
EASTMAN KODAK COMPANY, 343 State Street, Rochester, New York
14650-2201, United States of America [ADP No. 56832066001]
Entry Type 25.14 Staff ID. RD06 Auth ID. EPT

**** END OF REGISTER ENTRY ****

RENEWAL DETAILS

PUBLICATION NUMBER	EP0356250

PROPRIETOR(S)

EASTMAN KODAK COMPANY, 343 State Street, Rochester, New York 14650-2201, United States of America

DATE FILED	25.08.1989
DATE GRANTED	01.06.1994
DATE NEXT RENEWAL DUE	01.09.1994
DATE NOT IN FORCE	
DATE OF LAST RENEWAL	
YEAR OF LAST RENEWAL	00
STATUS	PATENT IN FORCE