June 7, 1927. 1,631,721

H. DE BOISCHEVALIER

HOT AIR STOVE

Filed Oct. 20, 1922

Fig. 1.

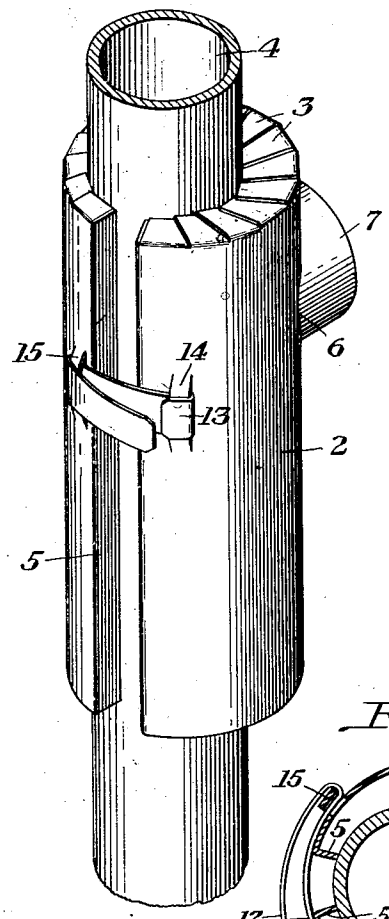

Fig. 2.

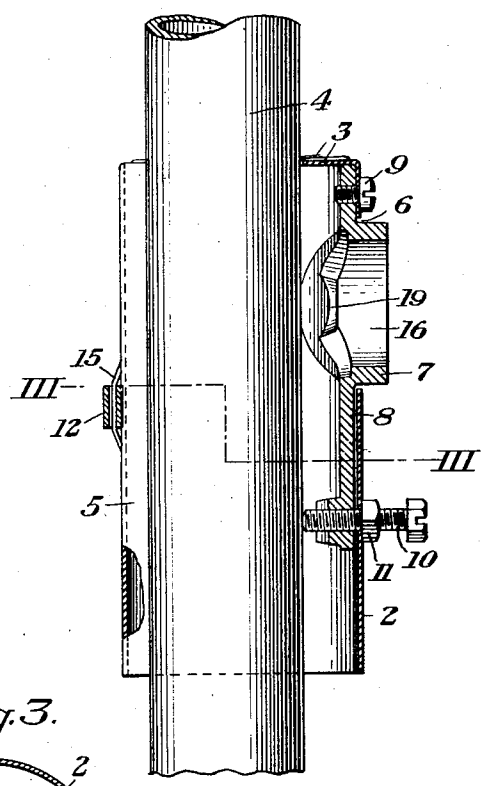

Fig. 3.

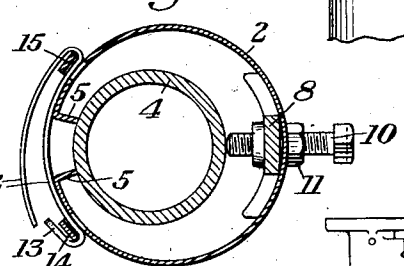

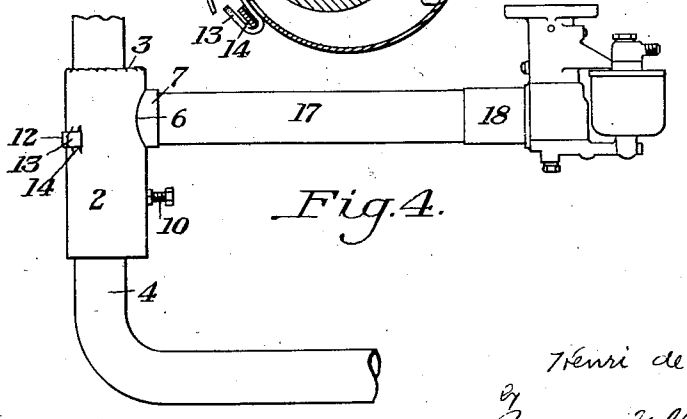

Fig. 4.

INVENTOR

Henri de Boischevalier,

By Byrnes, Stebbins & Parmelee,

his Attys.

Patented June 7, 1927. 1,631,721

UNITED STATES PATENT OFFICE.

HENRI DE BOISCHEVALIER, OF DETROIT, MICHIGAN, ASSIGNOR TO SOCIETE DU CARBURATEUR ZENITH, OF LYON, FRANCE, A CORPORATION OF FRANCE.

HOT-AIR STOVE.

Application filed October 20, 1922. Serial No. 595,879.

The present invention relates to an accessory for use with an internal combustion engine and the carburetor therefor, whereby the air supplied to the carburetor may be preheated if desired.

At the present time it is customary to provide various forms of stoves or heaters by means of which it is possible to preheat the air supplied to a carburetor. Ordinarily, however, stoves for this purpose have been in the form of comparatively bulky castings thereby requiring considerable room and the use of a series of fastening devices for maintaining the same in the desired position. As it is frequently desirable to remove such stoves to permit repairs on the engine, or for other reasons, it is desirable that the stove shall be of comparatively simple construction requiring a minimum number of fastening devices.

By the present invention there is provided a stove for this purpose which may be easily and effectively clamped in position on an exhaust pipe or other heating member and which occupies a minimum amount of room.

In the accompanying drawings there is shown for purposes of illustration only, a preferred embodiment of the present invention, it being understood that the drawings do not define the limits of this invention, as changes may be made in the construction and operation disclosed herein without departing from the spirit or scope of my broader claims.

In the drawings,—

Figure 1 is a perspective view of a portion of an exhaust pipe having the improved stove in position thereon;

Figure 2 is a sectional view through the construction illustrated in Figure 1, certain of the parts being shown in elevation and other parts being broken away for sake of clearness.

Figure 3 is a transverse sectional view on the line III—III of Figure 2; and

Figure 4 is a side elevation largely diagrammatic, illustrating the manner in which the stove may be connected to a carburetor.

A hot air stove constructed in accordance with the present invention preferably comprises a casing 2 of sheet metal of such gauge that the same is more or less flexible. At the upper end of the casing there is formed a series of inwardly extending overlapping projections 3 adapted to slide one upon the other and thereby permit the casing to conform to exhaust pipes 4, or other heating members of varying diameters. These projections are preferably so formed as to position the casing eccentrically with respect to the heating member. The adjacent edges of the casing 2 are preferably inturned to provide flanges 5 adapted to extend substantially radially to a heating member when in position thereon and abut thereagainst through substantially the entire length of the casing. In this manner there is provided a heating chamber between the casing and the exterior wall of the heating member, which casing is preferably open at its lower end to permit the required air to readily pass thereinto.

Formed in the casing adjacent the upper end thereof is an opening 6 adapted to receive the projection 7 on a casting 8. This casing is held in position within the casing by a screw 9 at its upper end and by a second screw 10 at its lower end. The screw 10 preferably passes loosely through a suitable opening in the casing and is then threaded through an opening in the casting. By reason of this construction it is possible after the casing is in position on a heating member to loosen the lock nut 11 and turn the screw 10 inwardly into engagement with the heating member. This in turn also draws the flanges 5 tightly into engagement with said member.

For initially clamping the casing in approximate position, there may be provided a strap 12 having at one end a hook 13 adapted to slip under a struck-out portion 14 in the casing 2. The free end of the strap is then passed under a second struck-out portion 15, the edges of the casing are drawn together and the strap is bent backwardly upon itself. It will be apparent that this strap provides means for easily clamping the casing in position and holding the same while it is drawn into final position by the screw 10.

The projection 7 on the casting 8 has an opening 16 therethrough adapted to receive an air-conducting pipe 17 leading to the air intake 18 of a carburetor of any well known construction. For limiting the extent to which the pipe 17 may enter the projection, the casting may be provided with

one or more inwardly projecting lugs 19 adapted to engage the end of the pipe.

It will be obvious that this invention provides a stove of minimum weight requiring a comparatively small amount of room for its installation and sufficiently flexible to permit the same to be readily applied. At the same time by reason of its flexible nature, and the provision of the projections 3, each stove may be utilized with heating members of different diameters.

I claim:

1. As an article of manufacture, a hot air stove for carburetors, comprising a casing adapted to be bent around heating members of different diameters, said casing having a flexible end wall adapted to seal one end thereof irrespective of the diameter of the heating members, substantially as described.

2. As an article of manufacture, a hot air stove for carburetors, comprising a one piece flexible and deformable casing adapted to be bent at will around a heating member within the capacity of the stove irrespective of the diameter of such heating member, and to occupy a predetermined spaced relation thereto irrespective of such diameter, and means for maintaining the same in eccentric relation to said member, said stove having a heated air off-take adjacent the point of maximum spacing of said casing from the heating means, substantially as described.

3. As an article of manufacture a hot air stove for carburetors, comprising a flexible casing adapted to be bent around heating members of different diameters, said casing having at least one end wall freely extensible circumferentially and adapted to effectively cooperate with a heating member irrespective of the diameter of the heating member to which the casing is applied to effectively close one end thereof against air inflow, and means for holding the casing in position on a heating member, substantially as described.

4. As an article of manufacture, a flexible casing adapted to cooperate with a heating member and to supply heated air to a carburetor, said casing having inturned edges adapted to abut the surface of the heating member throughout substantially the entire length of the casing, means for drawing said edges toward each other, and means for tightening the casing on the heating members, substantially as described.

5. As an article of manufacture, a flexible casing adapted to cooperate with a heating member and supply heated air to a carburetor, said casing having inturned edges adapted to abut the surface of the heating member throughout substantially the entire length of the casing, and having inturned overlapping projections at one end cooperating with the periphery of the heating member, substantially as described.

6. As an article of manufacture, a flexible casing adapted to cooperate with a heating member and supply heated air to a carburetor, said casing having inturned edges adapted to abut the surface of the heating member throughout substantially the entire length of the casing, and having inturned projections at one end cooperating with the periphery of the heating member, said projections being formed to maintain the casing in eccentric relationship to the heating member, and effectively close one end thereof, substantially as described.

7. As an article of manufacture, a hot air stove for carburetors, comprising a flexible casing adapted to be bent around a heating member, said casing having at one end inwardly extending overlapping projections forming a circumferentially extensible end wall closure adapted to engage the periphery of the heating member, substantially as described.

8. As an article of manufacture, a hot air stove for carburetors, comprising a flexible casing adapted to be bent around a heating member, said casing having at one end inwardly extending overlapped projections adapted to engage the periphery of the heating member, substantially as described.

9. As an article of manufacture, a hot air stove for carburetors, comprising a flexible casing adapted to extend around a heating member, means for holding the casing tightly in engagement with said member, and separate means for adjusting the casing relatively to the heating member, substantially as described.

10. As an article of manufacture, a flexible casing adapted to be bent around an exhaust pipe, said casing having edge flanges adapted to abut such pipe throughout substantially the entire length of the casing, inwardly projecting portions formed on one end of said casing for engagement with the periphery of such pipe, a bendable strap for holding said casing in position, and removable means in the casing for connection with the air intake of a carburetor, substantially as described.

11. As an article of manufacture, a flexible casing adjustable to conform to exhaust pipes of different diameters, inturned edges on two sides of said casing adapted to abut against an exhaust pipe and both effectively close the casing with respect thereto and space the same therefrom, a circumferentially extensible end wall on one end of said casing, means for securing said casing in position and preventing separation of its edges, and means for tightening the casing in position, substantially as described.

12. As an article of manufacture, a flexible casing adjustable to conform to exhaust pipes of different diameters, inturned edges on two sides of said casing adapted to abut

against an exhaust pipe and both effectively close the casing with respect thereto and space the same therefrom, a circumferentially extensible end wall on said casing adapted to seal one end thereof irrespective of the diameter of the exhaust pipe to which the casing is applied, and an offtake connection for said casing adjacent said extensible end wall, substantially as described.

13. As an article of manufacture, a flexible casing adjustable to conform to exhaust pipes of different diameters, inturned edges on two sides of said casing adapted to abut against an exhaust pipe and both effectively close the casing with respect thereto and space the same therefrom, and a flexible end wall on said casing adapted to effectively close one end thereof irrespective of the diameter of the exhaust pipe to which the casing is applied, said end wall comprising a plurality of overlapping projections, substantially as described.

14. As an article of manufacture, a flexible casing adjustable to conform to exhaust pipes of different diameters, inturned edges on two sides of said casing adapted to abut against an exhaust pipe and both effectively close the casing with respect thereto and space the same therefrom, and a flexible end wall on said casing adapted to effectively close one end thereof irrespective of the diameter of the exhaust pipe to which the casing is applied, said end wall comprising a plurality of overlapping projections of gradually increasing length from each side of the casing toward the center, substantially as described.

In testimony whereof I have hereunto set my hand.

HENRI DE BOISCHEVALIER.