PCT

WORLD INTELLECTUAL PROPERTY ORGANIZATION
International Bureau

INTERNATIONAL APPLICATION PUBLISHED UNDER THE PATENT COOPERATION TREATY (PCT)

(51) International Patent Classification 4 :
H05K 3/32, 3/46

A1

(11) International Publication Number: **WO 86/ 06573**

(43) International Publication Date: 6 November 1986 (06.11.86)

(21) International Application Number: PCT/US86/00641

(22) International Filing Date: 31 March 1986 (31.03.86)

(31) Priority Application Numbers:
728,714
728,894
728,895
728,896
729,018

(32) Priority Dates:
30 April 1985 (30.04.85)
30 April 1985 (30.04.85)
30 April 1985 (30.04.85)
30 April 1985 (30.04.85)
30 April 1985 (30.04.85)

(33) Priority Country: US

(71) Applicant: AMP INCORPORATED [US/US]; P.O. Box 3608, Harrisburg, PA 17105 (US).

(72) Inventors: DERY, Ronald, Allen ; 1274 Huntingdon Road, Winston-Salem, NC 27104 (US). EVANS, William, Robert ; Route 6, Box 43, Morresville, NC 28115 (US). JONES, Warren, Charlie ; 445 Anita Drive, Winston-Salem, NC 27104 (US). MAY, Clifton, Carl, Jr. ; 131A Broadmoor Lane, Winston-Salem, NC 27104 (US). WENTINK, Steven, George ; 1225 Royal Coach Trail, Kernersville, NC 27284 (US). ZAKARY, Paul, David ; 937 Bryans Place Road, Winston-Salem, NC 27104 (US).

(74) Agents: SEITCHIK, Jay, L. et al.; AMP Incorporated, P.O. Box 3608, Harrisburg, PA 17105 (US).

(81) Designated States: AT (European patent), BE (European patent), CH (European patent), DE (European patent), FR (European patent), GB (European patent), IT (European patent), JP, KR, LU (European patent), NL (European patent), SE (European patent).

Published
With international search report.
With amended claims.

(54) Title: CIRCUIT PANEL WITHOUT SOLDERED CONNECTIONS AND METHOD OF FABRICATING THE SAME

(57) Abstract

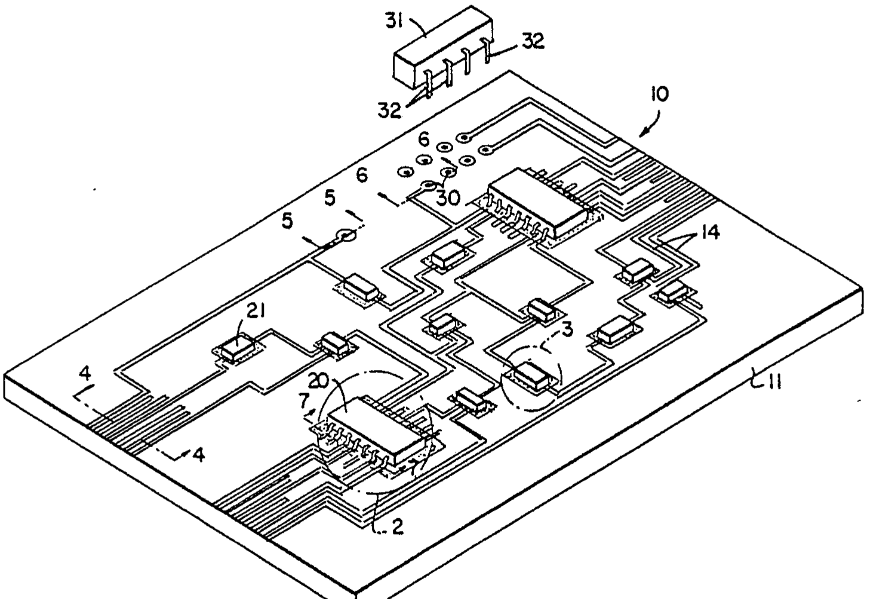

A circuit panel assembly for use in interconnecting electrical components (20, 21) has circuitry in the form of electrical traces (14) defined on a substrate (11). A layer of anisotropically conductive adhesive (24) surface mounts the components (20, 21) to the circuitry. Circuit panel assemblies having single (11) or multiple substrate (111, 111a, 111b, 111c) layers can be employed. The substrates can be rigid, such as metal, or can be flexible films, and a flexible dielectric coating (111a, 111b, 111c) deposited over the circuitry on one substrate layer can form the substrate for the next layer of circuitry. The anisotropic adhesive layer (24) is deposited over an entire component connecting area (15) to mechanically secure the components (20, 21) to a substrate (11), but the adhesive (24) is electrically conductive only normal to the layer so that laterally adjacent component leads are not shorted. A method for fabricating a continuous strip of flexible single and multilayer (310, 334) panel assemblies is also disclosed.

FOR THE PURPOSES OF INFORMATION ONLY

Codes used to identify States party to the PCT on the front pages of pamphlets publishing international applications under the PCT.

AT	Austria
AU	Australia
BB	Barbados
BE	Belgium
BG	Bulgaria
BR	Brazil
CF	Central African Republic
CG	Congo
CH	Switzerland
CM	Cameroon
DE	Germany, Federal Republic of
DK	Denmark
FI	Finland
FR	France
GA	Gabon
GB	United Kingdom
HU	Hungary
IT	Italy
JP	Japan
KP	Democratic People's Republic of Korea
KR	Republic of Korea
LI	Liechtenstein
LK	Sri Lanka
LU	Luxembourg
MC	Monaco
MG	Madagascar
ML	Mali
MR	Mauritania
MW	Malawi
NL	Netherlands
NO	Norway
RO	Romania
SD	Sudan
SE	Sweden
SN	Senegal
SU	Soviet Union
TD	Chad
TG	Togo
US	United States of America

Circuit panel without soldered connections and method of fabricating the same.

The present invention relates to a circuit panel assembly, such as a printed circuit panel, and the method of fabricating the same, and which is characterized by the absence of soldered connections.

At the present time, printed circuit panels are manufactured by a process which starts with a substrate, which is usually a rigid plastic panel, and which has a copper foil laminated on one or both sides. The laminated panel is then drilled to form the apertures for attachment of the leaded components, as well as through (or via) apertures for establishing electrical continuity from one side of the panel to the other. The circuit pattern is then reproduced on the panel by etching the copper laminate to produce individual copper traces. More particularly, etching is accomplished by coating the copper laminate with a resist having the form of the circuit pattern, and then placing the panel in a solution which acts to etch away the copper that is unprotected by the resist. After suitable washing and rinsing operations, the resulting copper traces are then covered with a suitable protective coating.

It is often desirable to electroplate the copper traces of the circuit pattern for corrosion protection, or to improve solderability, and this operation is usually done before etching. Electroplating also involves the application of a resist to all surfaces of the copper except the conductor pattern, and so that the conductor pattern can then be electroplated with a desired metal, such as tin or gold. The resist is then removed. This procedure also may be used to plate the interior of the via apertures, to assure conductivity therethrough.

Most conventional circuit panels also mount electrical components of various types, such as resistors or integrated circuits. These components typically include several metal leads in the form of pins, which are adapted to extend into the apertures provided in the panel for this purpose. Originally, this assembly was done by hand, and the leads of the components were soldered by hand, so that the leads were electrically connected to the desired conductive traces on the panel.

More recently, however, the electrical components have been joined by a "wave" soldering procedure, wherein the components are assembled to the panel, and the panel is then supported above a bath of heated liquid solder. A wave is formed in the bath which contacts one side of the panel and wets the exposed leads of the components. Upon cooling, the leads are thereby secured in the apertures.

Another recently developed procedure for mounting electrical components on a circuit panel permits the components to be mounted to the surface of the panel rather than in apertures. In this procedure, known as "vapor phase reflow" soldering, the components have leads which are adapted to rest upon the surface of the copper traces, and an adhesive is normally placed beneath the components to secure them to the surface of the panel. Also, a solder paste is dispensed in the areas of -the copper traces which receive the component leads, and after the components are placed on the panel, the assembly is passed through a heated vapor which condenses on the panel and heats and melts the solder paste, which acts to electrically secure the leads to the traces upon subsequent cooling.

As will be apparent, the present procedures involved in both the fabrication of the panel, and the mounting of components, involve numerous complex and expensive steps. In addition, the fact that the panel is subjected to substantial heat during the soldering operations is often destructive to the sensitive electronic components being mounted on the panel.

As a further and significant deficiency in the present circuit panel constructions, there is often a difference between the thermal coefficient of expansion of the panel material and that of the component being secured to the panel, which results in relative movement between the panel and components during temperature changes. This relative movement places a strain on all of the soldered connections and can result in a separation in the circuit, or even the complete release of the component from the panel. This problem is particularly pronounced in the case of surface mounted components, in view of the necessarily thin layer of solder which is used. Also, the thermal expansion problem has effectively precluded the use of metal, such as aluminum, for the panel substrate, since such metals have a relatively high thermal coefficient of expansion as compared to the plastics commonly used in the components or component housings.

Circuit panel assemblies have also been proposed wherein the supporting substrate comprises a thin plastic film, and wherein the circuits are formed and the components are mounted by essentially the same procedures as those described above for rigid panels. Such flexible circuit panels have the advantages of low cost and the ability to conform to an irregular space, but they possess most of the same disadvantages and deficiencies associated with the rigid panels as noted above. Also, the flexibility of the substrate presents a further problem in that the soldered connections tend to separate or crack during flexure of the substrate, which can result in a separation in the circuit or the complete release of a component from the substrate.

The requirements of increased density on printed circuit panels, as well as the need for high speed components and systems, have led to the development and use of multilayer printed circuit panels. However, the multilayer printed circuit panels have heretofore been expensive and difficult to manufacture in view of the registration and other problems, which have precluded their widespread use.

It is accordingly an object of the present invention to provide a circuit panel assembly and method of fabricating the same which effectively alleviates the above noted problems and deficiencies of the prior art, and wherein the method is greatly simplified and relatively inexpensive as compared to the presently employed fabrication methods.

It is a more particular object of the present invention to provide a circuit panel assembly and a method for fabricating the same which avoids all use of soldered connections, thereby avoiding the risk of damage to sensitive electrical components from excessive heat.

It is also an object of the present invention to provide a method of surface mounting components to a printed circuit panel or the like, which is able to accommodate limited relative movement between the panel material and the component caused by different coefficients of expansion, and which thereby permits the use of aluminum and nearly any other metal or plastic material as the substrate of the panel, without risk of separation of the electrical connections between the leads of the components and the conductive traces on the panel.

It is a further object of the present invention to provide a circuit panel assembly, and a method of fabricating the same on a flexible film substrate in an essentially continuous operation, so as to further minimize the cost of manufacture, and also provide a circuit panel assembly which can be deformed to fit within an irregular space.

It is still another object of the present invention to provide a multilayer flexible circuit panel assembly and a method of fabricating the same, and wherein the method may be performed as an essentially continuous operation so as to minimize costs, and so as to achieve a high density of circuits and components.

These and other objects and advantages of the present invention are achieved in the embodiments illustrated herein by the provision of a circuit panel assembly which comprises a substrate, at least one surface mount or leaded component and its associated connecting area defined on at least one surface of the substrate, a plurality of conductive traces on the substrate which define component interconnection circuits, an adhesive means of electrically connecting and mechanically securing components to the circuitry, and a dielectric layer that overlies that portion of the conductive circuitry outside of the component connecting areas. The conductive traces include component contact member mounting pads which are grouped to form the respective component connecting areas. Surface mount or leaded components are provided which have a plurality of electrical contact members.

The surface mount components are adapted to be mounted upon a component connecting area with the electrical contact members of each component overlying the associated component contact member mounting pads on the substrate, and such that a layered adhesive system both mechanically secures and electrically connects the components and the electrical contact members to the associated connecting area and component contact member mounting pads. A layer of an anisotropically conducting adhesive overlies the component connecting areas and allows electrical conductivity in a direction normal to the plane of the substrate, i.e. between the contact members of the components and the associated component contact member mounting pads, while precluding conductivity laterally between adjacent component contact members, circuit traces, or component contact member mounting pads.

In the preferred embodiment, the layer of anisotropic adhesive overlies substantially the entire area of each of the surface mount connecting areas so as to be adapted to adhesively secure the body of each surface mount component thereto. Also, the circuit panel assembly preferably includes a second adhesive layer which is insulating in nature, overlies the anisotropically conducting adhesive layer prior to the assembly of the surface mount components, and serves to enhance the mechanical bonding of the surface mount components to be pressed therethrough and electrically contact the underlying adhesive layer during assembly of the components to the component connecting areas. Also, and significantly, the adhesive layers of the present invention possess sufficient compliance to accommodate limited relative movement between the substrate and the components resulting from their different coefficients of thermal expansion.

The leaded components, not designed for surface mounting, are mounted so that their leads pass through apertures in the substrate. The walls of the apertures are coated with a conductive substance such as a conductive ink which serves as the component contact member mounting pad for the leaded components and also provides interconnection between circuitry on one side of the substrate and circuitry on the other side of the substrate. The area surrounding the edge of an aperture may contain a printed conductive ink pattern to extend the component contact member mounting pad of the aperture interior thereby further enhancing the electrical connection of the aperture interior to the component interconnecting circuitry. Additional conductive ink or a bulk conductive adhesive added to the apertures mechanically secures and electrically connects the component leads to the coated aperture sides and subsequently to the component interconnection circuitry. The leaded components may be further mechanically secured to the substrate by an intervening layer of adhesive between the component body and the substrate.

The preferred method of fabricating the above described circuit panel assembly includes the steps of applying the electrically conductive traces on the substrate, then applying a dielectric cover layer upon the portions of the substrate outside each of the component connecting areas. A layer of the anisotropically conductive adhesive is then applied so as to cover each of the component connecting areas for the surface mount components and the component contact mounting pads. The electrical components are then mounted upon the surface of the appropriate component connecting areas. Preferably, each of the steps of applying the conductive traces, applying the dielectric cover layer, and applying the layer of anisotropically conductive adhesive, involve screen printing a liquid material onto the substrate. Also, the method preferably includes the further step of applying a layer of nonconductive adhesive upon the layer of anisotropically conductive adhesive, and wherein the surface mounting step includes pressing the electrical components onto the overlying nonconductive adhesive layer and layer of anisotropically conductive adhesive, and such that the contact members come in contact with the anisotropically conductive adhesive layer to establish electrical contact with the underlying component contact member mounting pads.

The preferred method of fabricating the above described circuit panel assembly in an essentially continuous operation, includes the steps of advancing a readily flexible plastic film substrate along a path of travel, and applying the electrically conductive traces on the advancing substrate to define distinct, serially arranged panel elements in a repeating pattern along the substrate. A layer of the anisotropically conductive adhesive is then applied to the advancing substrate so as to cover each of the component connecting areas and the component contact member mounting pads therein, and the electrical components are then mounted upon the surface of each of the component connecting areas. The advancing substrate is then severed between the repeating patterns to separate the panel elements and form separate flexible circuit panel assemblies.

In the embodiment of the method which results in the fabrication of a flexible multilayer circuit panel assembly, a plurality of flexible plastic film substrates are advanced along parallel, superposed and spaced apart paths of travel. Each of the advancing film substrates is processed as described above to receive a desired pattern of conductive traces, as well as the anisotropically conductive adhesive, dielectric cover, and other layers as described above. Thereafter, the advancing film substrates are guided into a superposed contiguous relationship, with the anisotropically conductive adhesive electrically interconnecting aligned traces of each adjacent pair of substrates and physically securing the superposed substrates, with the panel elements of the substrates in registry. Thereafter the joined substrates are severed between the panel elements so as to form separate multilayer circuit panel assemblies. Surface mount components may be added to the multilayer circuit panel assemblies. Generally the components will be mounted on one or both of the outermost layers of the multilayer assembly. The components may be added after the substrates are joined either prior to or after the multilayer assemblies are severed from each other. Leaded components can be mounted to the multilayer panel in the same manner as previously described.

These and other objects and advantages of the present invention will become apparent as the description proceeds, when taken in conjunction with the accompanying drawings.

FIGURE 1 is perspective view of a printed circuit panel which embodies the features of the present invention;

FIGURE 2 is a fragmentary exploded perspective view of a portion of the panel shown in Figure 1;

FIGURE 2A is a fragmentary exploded perspective view of multicontact socket mounted to a panel in accordance with the invention;

FIGURE 3 is a fragmentary exploded perspective view of another portion of the panel shown in Figure 1;

FIGURE 4-7 are fragmentary sectional views taken substantially along the lines 4-4, 5-5, 6-6, and 7-7 of Figure 1, respectively;

FIGURES 8 through 13 are perspective views illustrating sequential steps in the method of fabricating the circuit panel in accordance with the present invention;

FIGURES 9A, 10A, 11A, 12A, and 13A, are fragmentary sectional views taken substantially along the lines 9A-9A of Figure 9, 10A-10A of Figure 10, 11A-11A of Figure 11, 12A-12A of Figure 12, and 13A-13A of Figure 13, respectively;

FIGURES 13B and 13C are fragmentary sectional views taken substantially along the lines 13B-13B of Figure 13, and illustrating two of the sequential steps involved in mounting a component to the surface of the substrate of the circuit panel;

FIGURE 14 is a view similar to Figure 4, but illustrating the use of an anodized aluminum substrate for the circuit panel;

FIGURE 15 is a perspective view of a multilayer circuit panel made in accordance with the invention;

FIGURE 16 is a fragmentary cross-sectional view taken along line 16-16 of Figure 15 of the multilayer circuit panel illustrating surface mounting of components;

FIGURE 17 is a fragmentary cross-sectional view of the multilayer circuit panel taken along line 17-17 of Figure 15 illustrating a through hole;

FIGURE 18 is a fragmentary cross-sectional view of the multilayer circuit panel illustrating a via-hole;

FIGURE 19 is a view similar to Figure 1, but illustrating the use of a flexible substrate for the circuit panel;

FIGURE 20 is a perspective view of a flexible strip of serially interconnected circuit panel assemblies and which embodies the features of the present invention;

FIGURE 21 is a fragmentary sectional view of a multilayer flexible circuit panel assembly which embodies the features of the present invention;

FIGURE 22 is a schematic illustration of a method of continuously fabricating flexible circuit panel assemblies in accordance with the present invention; and

FIGURE 23 is a schematic illustration of a method of continuously fabricating multilayer flexible circuit panel assemblies in accordance with the present invention.

Referring more particularly to the drawings, Figure 1 illustrates a completed circuit panel assembly in the form of a printed circuit panel 10, which embodies the features of the present invention. The panel 10 comprises a flat substrate 11, which comprises a rigid plastic material in the embodiments of Figures 1-13. Figure 14 illustrates an alternative embodiment, wherein the substrate comprises an aluminum panel 11a which has been anodized to leave a high dielectric coating 12, and which is resistant to elevated temperature and thermal shock.

The panel 10 further includes a plurality of electrically conductive traces 14 on at least one surface of the substrate, and which define a plurality of component connecting areas 15. As best seen in Figures 2 and 3, the conductive traces include component contact member mounting pads 16 which extend into the respective component connecting areas 15 and which serve to electrically connect a component in the manner further described below.)

The electrically conductive traces 14 comprise a solidified electrically conductive polymer which has been deposited on the substrate as a fluid ink and then dried, in the manner further described below. Typically, the fluid ink comprises silver dispersed in a solvated polyester resin, which dries to form a dried resin binder.

Alternatively the conductive traces of the panel may be formed by discrete metal conductors or by a metal sheet which has been etched to form the desired pattern of traces by procedures well known in the art, respectively, commonly referred to as flat conductors and etched conductors.

The portions of the substrate 11 which mount the electrically conductive traces, but which are not within one of the component connecting areas 15, are covered with a dielectric cover layer 18, note Figure 4. The dielectric cover layer 18 thus covers and protects the conductive traces of the circuitry. The traces 14 are thereby protected from moisture and most other environmental contamination.

A surface mounted electrical component 20, 21 overlies a portion of each of the component connecting areas, and each such electrical component includes a plurality of electrical contact members 22 overlying respective ones of the component interconnection traces 16 comprising component contact mounting elements within respective component connecting areas. A layer of an anisotropically conductive adhesive 24 (Figure 7) overlies each of the component connecting areas, with the anisotropically conductive adhesive layer adhesively interconnecting the component to the substrate and electrically interconnecting each of the contact members only to its associated component contact member mounting pad. The layer of anisotropically conductive adhesive 24 is electrically conductive normal to the layer, but does not conduct laterally.

The circuit panel assembly of the present invention further comprises a nonconductive adhesive layer 26 overlying the layer of anisotropically conductive adhesive 24 in all remaining portions, i.e. all portions of each of the connector areas 15 not covered by an electrical component or the electrical contact members thereof, so as to electrically insulate the layer of anisotropically conductive adhesive from contact with external members which could cause a short through the conductive anisotropically adhesive.

As best seen in Figure 5, the panel illustrated in Figure 1 also includes a through or via aperture 27. Such an aperture has a solidified electrically conductive polymer 28 coating the aperture walls and extending therethrough and electrically interconnects traces 14 on opposite surfaces of the panel. Preferably, the solidified polymer in the via aperture has substantially the same composition as that of the conductive traces.

The panel illustrated in Figure 1 also includes a plurality of apertures 30 which extend through the substrate and which communicate with selected traces, possibly on each surface of the panel. An associated electrical component 31 is also provided, which has a plurality of electrical contact members in the form of metal leads or pins 32. These leads are disposed in the respective apertures of the component connecting area. A solidified electrically conductive polymer 33 substantially coats the aperture walls and fills the remainder of each of the apertures for electrically connecting the leads with the associated component interconnecting traces and mechanically securing the leads in the apertures. Preferably, the solidified polymer 33 which fills these apertures has a composition substantially the same as that of the conductive traces 14 and the solidified polymer 28 in the via apertures 27.

Several specific non-limiting examples of the various inks applied to the substrate will now be described. As noted above, the conductive traces 14 are preferably applied on the substrate in the form of a polymeric conductive ink, and specifically a silver containing solvated polyester resin, which is then dried. In addition to polyester, the polymer may comprise an acrylics epoxy, polyimide, polyurethane, polycarbonate or polyvinyl resin. The solvent serves to dissolve the polymer, and may be dried by the application of heat to remove the solvent and bond the polymer to the substrate. Butyl Cellosolve* acetate, and glycol ethers and their derivatives are commonly used solvents. As a specific example of a suitable ink, the conductor ink may be formulated as follows:

Ingredient	Percentage (by weight)
silver	60%
polyester resin	15%
butyl Cellosolve* acetate	25%

* Cellosolve is a trademark of Union Carbide Corporation, Danbury, Connecticut.

The conductor ink sold under the designation 5007 by E. I. Du Pont de Nemours & Co., Inc., Wilmington, Delaware, is suitable for use with the present invention. Also, the above inks are adapted to be applied to the substrate by screen printing, which is the preferred method of application.

Thermoset or crosslinkable conductive inks may also be used. The conductive ink sold under the designation "CT 5030" by Amicon Corp., Lexington, Massachusetts, is one such ink suitable for use with the invention. It is a silk screenable epoxy resin based silver ink.

The composition of the dielectric cover layer 18 also preferably has a formulation which permits it to be applied by a screen printing operation, and in addition, it should have a desirable degree of flexibility and the ability to adhere to the material of the substrate.

One formulation for a dielectric coating suitable for use with the present invention is as follows:

Ingredient	Percentage (by weight)
FLEXCOAT (W. R. Grace)	68.38%
Diallyl phthalate	5.47%
Photoinitiator	1.37%
N-vinyl pyrrolidone	8.21%
Acrylated urethane prepolymer system	16.47%
Additive-adhesion promotor	0.10%
	100%

FLEXCOAT is a trademark of W. R. Grace Co., New York, New York, for a screen printable photopolymer solder resist which rapidly cures through the application of ultraviolet light, and which forms a tough protective film over the circuitry. The added ingredients provide improved printability, flexibility and adhesion properties. The plasticizer, diallyl phthalate is added to increase the flexibility of the dielectric coating 18 so that the coating 18 will not crack or craze when the substrate to which it is applied is flexed or is subject to thermal expansion. One source for diallyl phthalate is Fisher Scientific Co., Pittsburgh, Pennsylvania. N-vinyl pyrrolidone is a monofunctional acrylate monomer added to control shrinkage of the cured dielectric coating 24. This monomer is available under the trade name V-PYROL from GAF Corporation, New York, New York. The acrylated urethane prepolymer used in the above example is available under the trade name PURELAST 169, from Polymer Systems Corporation, New Brunswick, New Jersey. This polymer was added to increase the flexibility of the coating. IRGACURE 651, available from Ciba Geigy Corporation, Ardsley, New York, was used as the photoinitiator. The adhesion promotor was A186 available from Union Carbide Corporation, Danbury, Connecticut.

An anisotropically conductive adhesive suitable for use with the present invention may be made by mixing electrically conductive particles with a non-conductive adhesive binder. The percent by volume and size of the particles are selected so that the particles are dispersed randomly throughout the mixture as non-contiguous conductive units, with each unit being comprised of one or a plurality of individual particles. The units are sufficiently spaced apart to preclude electrical conductivity between two or more adjacent conductive areas on the same substrate, but the number of particles is sufficient so that the conductive units provide an electrical contact between the conductive areas on two mating substrates. In the preferred embodiment, the anisotropically conductive adhesive forms a plurality of separate multiparticle clusters.

The following example illustrates one method of preparing an anisotropically conductive adhesive as described in the above copending application, and which is suitable for use with the present invention. In this preferred example, 15.82 grams of silver coated nickel spheroids (8 micron diameter, 15% by weight silver) were mixed with 100 grams of a solvated polyester resin blend (33% by weight solids). This resulted in a hot melt anisotropically conductive adhesive composition having 5% by volume of silver coated spheroids. Mixing may be accomplished with a propeller type stirrer at moderate rotations per minute for approximately 15 minutes. Immediately after stirring, the mixture may be screen printed using a 105 mesh stainless steel screen, and the unwanted solvents may be driven off by heating at 125° C for 30 minutes. The resulting adhesive film is substantially dry and non-tacky at room temperature. Also, the resulting dry layer of adhesive possesses a relatively high degree of compliance, which is important in permitting accommodation of different coefficients of thermal expansion between the substrate and components. Of course this invention is not limited to the use of a thermoplastic resin, since a pressure sensitive adhesive can also be employed.

A suitable solvated polyester resin blend for use in the above example may be obtained from KC Coatings, Inc., of Lenexa, Kansas, which is sold under their designation "9627 M Clear". MYLAR is a trademark of E. I. Du Pont de Nemours Co., Inc., Wilmington, Delaware. More particularly, "9627 MYLAR Clear" comprises 29% by weight of a polyester resin, and the solvent comprises 59% butyrolactone and 41% of an aromatic solvent blend SC 150.

The nonconductive adhesive layer 26 preferably comprises a thermoplastic resin, and preferably is the same solvated polyester resin blend employed in the anisotropically conducting adhesive layer.

A preferred method of fabricating a circuit panel assembly in accordance with the present invention will now be described with reference to Figures 8-13. These figures schematically illustrate the basic steps of the method, it being understood that the steps need not be performed exactly in the indicated sequence. Initially, the method starts with a suitable rigid or flexible panel 11, and in cases where the panel is to include via apertures 27 component or lead apertures 30 for receiving the metal leads of components, a series of holes will be drilled or otherwise formed in the panel at the appropriate locations, and as shown in Figure 8. The surface of the panel will be rendered non-conductive if the panel is metallic. Anodization may be used in the case where the panel material is aluminum.

As illustrated in Figure 9, a plurality of electrically conductive traces 14 are next applied on one or both surfaces of the panel, preferably by screen printing a silver conductive ink as described above onto the surface, and so as to define at least one component connecting area 15 in this embodiment. By design, a portion of selected ones of the traces 14 will extend into the component connecting area 15, to define component contact member mounting pads 16 within the component connecting area and which serve as pads for surface mounted components. Also, certain of the traces will lead to the via apertures 27, and others will lead to the component lead apertures 30. In the preferred embodiment, a plurality of conductive ink traces extending between a plurality of component connecting areas and component mounting pads are defined, thus providing interconnecting circuits for the components to be mounted in the panel. After drying of the conductive ink, which may involve heating the panel to about 125° C, additional silver conductive ink, having the same composition as the ink for the traces, may then be screen printed in all of the apertures to coat the inside of the holes which upon drying forms the solidified polymer 28 as described above. This establishes a "through-panel" connecting capability between traces on the opposite surfaces of the panel. After drying the ink within the holes, a layer of dielectric material is applied upon the portions of the panel outside each of the component connecting areas and so as to cover those portions of the electrically conductive traces outside the component connecting areas to form the dielectric cover layer 18, note Figures 10 and 10A. This dielectric cover layer is preferably screen printed onto the panel in liquid ink form, with the apertures 27, 30 left uncovered, and the dielectric ink may include an ultraviolet curable resin as described above. In such event, the dielectric cover layer is thereafter cured by the application of ultraviolet light.

As illustrated in Figures 11 and 11A, an anisotropically conductive adhesive layer 24 may then be screen printed onto the component connecting area 15 of the substrate intended for a surface mounted component, so as to cover each of the component contact member mounting pads 16 within the component connecting area. This layer is suitably dried by heating to about 125° C., and then a nonconductive adhesive layer 26 is screen printed over the anisotropically conductive adhesive layer, and over the areas which underlie the bodies of the leaded components, note Figures 12 and 12A. The thermoplastic adhesive underlying the leaded components aids in further securing these components to the substrate during the component mounting stage of panel fabrication.

Although surface mounting of components has been described in terms of a relatively simple component, such as a resistor, this method is also well suited to more complicated components, such as leadless and leaded chip carriers and multi-contact surface mount sockets.

Figure 2A illustrates mounting a conventional multi-contact socket member 35 to a component connector area 15 in accordance with the invention. The electrical contact members 22 of the socket overlay respective component contact member mounting pads 16. A layer of anisotropically conductive adhesive 24 overlies the component connecting area 15. Plug component member 36 is inserted into the socket member 35. Use of sockets in this manner permits the plug members to be replaced without damaging the substrate 11.

After drying of the nonconductive adhesive layer 26 by again heating to about 125° C., the leaded components 31 may be assembled to the panel as shown in Figure 13, although this step may be performed after the mounting of the surface mount components 20, 21 if desired. To mount the leaded components 31, additional silver conductive ink of the same composition as that of the traces is screened or otherwise dispensed into the lead apertures. The leaded components are mounted on the panel, either just before or after the additional ink is dispensed in the apertures, with the leads of the components extending through respective ones of the apertures. This additional ink is then dried, preferably by heating to about 125° C., which is well below the temperature of 200° C. required for soldering components to a panel, and which results in the leads of the components being electrically connected and mechanically connected within their mating apertures by the resulting solidified polymer 33.

In the illustrated embodiment, the components 21, which may be resistors, are adapted to be mounted to the surface of the panel. In this case, the panel is preferably mounted in a jig (not shown), and a suitable template (not shown) is placed over the panel and which includes cut-outs to facilitate the location of the resistors with respect to the component contact member mounting pads 16 in the component connecting area. The resistors 21 are then placed in the cut-outs of the template, and the resistors are then pressed downwardly and held while heat is applied to soften the thermoplastic resin of the nonconductive adhesive layer 26 and the anisotropically conductive adhesive layer 24. Upon softening, the electrical contact members 22 of the resistors move through the nonconductive adhesive layer and come in contact with the conductive particles of the anisotropically conductive adhesive layer, to thereby electrically connect and adhesively secure each of said contact members with respective ones of the component contact member mounting pads. Also, the nonconductive adhesive layer 26 will be seen to completely overlie the layer of adhesive 24 in all remaining portions of each of the component connecting areas 15 so as to electrically insulate the layer of adhesive from external articles which may come in contact with the adhesive layer. Further, as illustrated in Figures 13B and 13C, the material of the nonconductive adhesive layer tends to partially encase the sides of the 21 during the assembly operation, to further secure the resistors on the panel. The temperature required to soften the layers is typically about 125° C., which as noted above, is normally well below the temperature of 200° C. required for soldering components to a panel. Upon cooling, the jig is opened and the completed circuit panel is removed.

This rigid single layer circuit panel described in the preferred embodiment is intended for use at normal temperatures which would include at least the temperature range of -20° C. to 70° C.

The same basic elements which can be used to fabricate the single layer panel assembly of Figures 1-14 can also be used to fabricate a multilayer printed circuit panel assembly, such as that shown in Figure 15. The multilayer printed circuit panel assembly shown in Figure 15 comprises a plurality of printed circuitry layers deposited on a single substrate 111. Each layer of printed circuitry includes a circuitry pattern, preferably comprising conductive ink traces 118 deposited on an insulating material. The first printed circuit pattern is deposited on the substrate 111. A dielectric cover layer deposited on this first layer of conductive traces, and preferably comprising a screen printed dielectric ink serves as the substrate for the next layer of printed circuitry traces. Alternate layers of conductive ink traces and dielectric ink layer-substrates can be built up without the addition of intervening rigid or flexible substrate layers of the type represented by the initial substrate 111.

Figures 16 to 18 show that a multilayer printed circuit panel assembly fabricated in accordance with this invention is compatible with surface mounting and through hole component attachment as well as was in the same manner as conventional multilayer printed circuit boards.

Figure 16 shows a conventional surface mount component 121, such as a resistor attached to conductive traces 118 on the upper layer of the printed circuit board. Additional conductive traces, such as 118a and 118b located on other layers are not in electrical contact with the leads 122 on component 121. In the preferred embodiment of this invention the electrical connection to component 121 is made by using an anisotropically conductive adhesive 128. Each of the cover layer-substrates 111a, 111b is formed by a dielectric ink. Figure 16 also shows the use of dielectric cover layer 124 and dielectric adhesive layer 130 used in the manner as previously described for corresponding layers 18, 26 in Figure 7.

Figure 17 shows a coated through hole used to make electrical connection with a leaded component. A conductive ink deposited in the lead holes is employed to establish electrical integrity with the leads, in the same manner as for a single layer configuration. In the preferred embodiment, the same conductive ink is employed in the coated lead holes as in the conductive traces. Figure 17 also shows that the conductors 118 in some layers, such as conductors 118a, 118b, and 118d can electrically contact lead 144, while other conductor traces 118b in other layers may be electrically isolated from the component lead.

Via holes 132 shown in Figure 18 are fabricated in much the same manner as with through hole leads. Conductive ink is deposited in aligned aperture defined in the dielectric ink-substrate layers to interconnect conductive traces, such as traces 118w, 118y and 118z on various layers. Other traces, such as traces 118x will be electrically isolated from the vias.

Although the preferred embodiment depicts multiple panel layers on a single side of the initial substrate 111, multiple panel layers, each individually isolated from the adjacent layer by a dielectric cover layer serving as an insulating substrate, can be formed on both sides of the initial substrate. Communication between any or all of the layers, on both sides of the initial substrate can be established through vias in the initial substrate. Furthermore, additional primary substrates, such as a polymeric film, can be employed with dielectric cover insulating substrate layers formed between the primary substrates. Again communication can be established between layers through vias extending through the primary substrate.

Figure 19 illustrates an alternative embodiment of a circuit panel assembly 212 which embodies the features of the present invention. The assembly 212 comprises a flat substrate 211 of readily flexible plastic film defining a panel element. As a specific example, the substrate 211 may comprise a sheet of polyester, polyimide, polycarbonate, polyvinyl or polyetherimide film, having a thickness in the range of between about 1-10 mils, preferably 2-5 mils.

The panel element 212 further includes a plurality of electrically conductive traces 218 on at least one surface of the substrate 211, and which define a plurality of component connecting areas for electrically connecting components 222 and 223 in the same manner as described in Figures 1 to 14 for the rigid circuit board.

The same basic elements, the conductive ink, anisotropically conductive adhesive and dielectric cover layer, used for fabricating the rigid circuit board may be used for fabricating the flexible board 212. The flexible board can be made in the same manner as the rigid board as described in Figures 8 to 13.

Alternatively, the flexible circuit panel assembly can be made in a continuous process as shown in Figures 20 and 22. Figure 20 illustrates a strip 310 of serially interconnected and distinct flexible circuit panel assemblies 312 which embody the features of the present invention. The strip 310 comprises a flat substrate 311 of readily flexible plastic film defining a plurality of distinct serially arranged panel elements which conform to the circuit panel assemblies 312. Also, the substrate includes a continuous edge strip 314 along each side of the serially arranged panel elements, with each of the edge strips 314 including regularly spaced apart sprocket holes 315 for use during the fabrication of the assemblies as further described below. As a specific example, the substrate 311 may comprise a sheet of polyester, polyimide, polycarbonate, polyvinyl or polyetherimide film, having a thickness in the range of between about 1-10 mils, preferably 2-5 mils.

Each panel element further includes a plurality of electrically conductive traces 318 on at least one surface of the substrate, and which define a plurality of component connecting areas for electrically connecting components 322, 323 in the same manner as previously described. The serially interconnected and distinct flexible circuit panel assemblies can be made with the same conductive ink, anisotropically conductive adhesive and dielectric cover layers as previously described for the other embodiments.

Figure 22 schematically illustrates a method for continuously fabricating a strip 310 of serially interconnected circuit panel assemblies 312 as illustrated in Figure 20. In the illustrated embodiment, a suitable substrate 311 of readily flexible plastic film, such as polyester, polyetherimide, polycarbonate, polyvinyl or polyimide film having a thickness of between about 1-10 mils, preferably 2-5 mils, is mounted on a delivery spool 342. The film substrate is withdrawn from the spool and continuously advanced along a path of travel, which includes several processing stations. Specifically, the advancing film 311 initially passes through a pair of cooperating tools 344 which serve to punch the via apertures, as well as the sprocket holes along the two side edges. Next, the advancing film passes between a screen printing roll 345, and follower roll 343, which serve to apply the conductive ink in the desired pattern of conductive traces, on one surface of the film in the illustrated embodiment. In this regard, it will be understood that the conductive ink is applied in a repeating pattern on the surfaces of the advancing substrate to define a plurality of distinct, serially arranged panel elements along the substrate. Also, the pattern of traces will define the component connecting areas, as described above, and a portion of selected ones of the traces will extend into each component connecting area to define the component contact member mounting pads within the component connecting area which serve as pads for the surface mount components as described in Figures 1 to 7. Also, certain of the traces will lead to the via apertures.

In the preferred embodiment, a plurality of conductive ink traces extending between a plurality of component connecting areas and component mounting pads are defined, thus providing interconnecting circuits for the components to be mounted in the panel as previously described.

After application of the conductive ink, the film passes through a drying oven 346, which serves to heat the film to about 125° C for the purpose of drying the ink. If desired, at this point the film may also pass through additional screen printing and follower rolls (not shown) for applying further conductive ink, having the same composition as that of the originally applied conductive ink, in all of the via apertures to coat the inside of the holes and assure a "through board" connecting capability between traces on the opposite surfaces of the panel. This added conductive ink may then be dried by passing the film through a further oven (not shown) to provide the above described solidified polymer in the apertures.

The film next advances through a screen printing roll 348 and follower rolls 343 for applying a layer of dielectric material upon the portions of the panel outside each of the component connecting areas and so as to cover those portions of the electrically conductive traces outside the connector areas, as previously described. This dielectric cover layer 324 is preferably screen printed onto the panel in liquid ink form, with the apertures 322 left uncovered, and the dielectric ink may include an ultraviolet curable resin as described above. In such event, the dielectric cover layer 324 is thereafter cured by the application of ultraviolet light in the chamber 349.

The anisotropically conductive adhesive layer 328 may then be screen printed onto the component connecting areas of the substrate by passing the advancing substrate through the rolls 350 and 343, and so as to cover each of the component lead traces within the component connecting areas. This layer is suitably dried in the oven 351 by heating to about 125° C. Thereafter, a nonconductive adhesive layer 330 is screen printed over the anisotropically conductive adhesive layer by passing the substrate through rolls 352 and 343, using the same pattern as the anisotropically conductive adhesive layer.

It will be understood that a pattern of conductive traces with component connecting areas and dielectric cover, anisotropically conductive and nonconductive adhesive layers can be applied to the second surface of the film in a similar manner. Alternatively, both sides of the film may be processed at the same time. It will be further understood that screen printing means are used for illustrative purposes only.

After the final nonconductive adhesive layer is dried, the film moves through a component assembly station 354 wherein the various components 323, shown in Figure 20, are mounted to one or both surfaces of the film in the same manner as previously described.

Figure 21 illustrates a fragmentary portion of a multilayer circuit panel assembly 334 in accordance with a further aspect of the present invention. In this embodiment, the several substrate layers 335, 336, 337 include aligned via apertures 338 for electrically conducting between the various layers. In the illustrated embodiment, the assembly includes three substrate layers, each composed of a thin flexible plastic film as described above, and the assembly includes a "through" opening composed of the aligned apertures 338 in the three substrates, and which is adapted to provide a conductive path between the top and bottom substrates. More particularly, the trace 318A on the outer surface of the upper substrate 335 is in electrical communication with the aperture 338 of the substrate 335, which in turn is in electrical contact with the aperture 338 of the substrate 336 and the aperture 338 of the substrate 337, and thus the trace 318B on the outer surface of the lower substrate. A "blind" opening is also illustrated, which is formed by the aligned apertures 339 in the substrates 335 and 336, and which provides a conductive path between the substrate 335 and the substrate 336, and specifically, between the trace 318C of the upper substrate and the trace 318D on the intermediate substrate. As will be apparent from Figure 21, the outer peripheries of selected apertures are coated with a layer of the anisotropically conductive adhesive 328, so that upon lamination of the layers, the aligned portions of the conductive traces surrounding the aligned apertures are electrically and physically interconnected. As will be understood, the apertures may be designed in a variety of configurations to achieve a desired interconnection between the various substrates.

Figure 23 schematically illustrates a method of fabricating a flexible multilayer circuit panel assembly 334 as shown in Figure 21 and in accordance with the present invention. In the illustrated embodiment, each circuit panel assembly 334 comprises three overlying or superposed film substrates 335, 336, 337, with each of the substrates being advanced from a delivery spool 342 along parallel, superposed and spaced apart paths of travel. Each of the three substrates passes through the hole punching rolls 344, and the several pairs of cooperating screen printing rolls 345, 348, 350, 352 and follower rolls 343 and associated ovens 346, 349, 351, 353, for applying the conductive traces 315, dielectric cover layer 324, anisotropically conductive adhesive layer 328, and nonconductive adhesive layer 330, substantially as described above with respect to the embodiment illustrated in Figure 22. At the downstream end of the parallel spaced apart paths of travel, the inside surface of the two outermost substrates contact a further adhesive applicator roll 356, which applies a suitable pattern of adhesive to assure proper lamination when the layers are brought together and passed through the laminating rolls 358.

During lamination, the several films 335, 336, 337 are guided, while held in registry by means of the sprocket holes 315, so that the anisotropically conductive adhesive 328 electrically interconnects aligned traces 318 of each adjacent pair of substrates and physically secures the superposed film substrates. The interconnection may be supplemented by the separate adhesive applied by the rolls 356.

Downstream of the lamination rolls 358, the advancing multilayer substrate passes through an assembly station (not shown) for applying surface mounted components 322, 323, in the manner described above. Thereafter, the advancing substrate is severed between the panel elements so as to form separate multilayer circuit panel assemblies. As will be understood, the surface mounting of the components may alternatively be performed after the severing of the substrates into separate panel elements.

This single and multilayer flexible circuit assemblies as set forth herein are intended for use at normal temperatures which would include at least the temperature range of -20° C to 70° C.

In the drawings and specification, there has been set forth preferred embodiments of the invention, and although specific terms are employed, they are used in a generic and descriptive sense only, and not for purposes of limitation.

CLAIMS:

1. A preformed circuit panel assembly of the type comprising electrical circuitry defined on a common panel for interconnecting electrical components disposed thereon, the panel assembly comprising:

a substrate (11);

a pattern of electrically conductive traces (14), defined on at least one surface of the substrate (11) defining the electrical circuitry;

a plurality of component connecting areas (15);

discrete component contact member mounting elements (16) within respective component connecting areas (15), the contact member mounting element (15) communicating with corresponding conductive traces (14); the panel assembly being characterized in that a layer of anisotropically conductive adhesive (24), electrically conductive normal to the layer, overlies a plurality of component contact member mounting elements (16) within each component connecting area (15), the anisotropically conductive adhesive being electrically insulative between discrete component contact member mounting elements (16), whereby a plurality of electrical components can be connected to the electrical circuitry without the use of solder.

2. The assembly of claim 1 wherein the anisotropically conductive adhesive comprises a plurality of conductive particles randomly dispersed within a nonconductive adhesive binder.

3. The assembly of claim 2 wherein the conductive particles are dispersed to form a plurality of multiparticle clusters.

4. The assembly of claim 1 wherein the layer of anisotropically conductive adhesive completely overlaps at least one entire component connecting area (15), the layer of anisotropically conductive adhesive (24) mechanically securing an electrical component to the substrate and electrically interconnecting the electrical component to the discrete contact member mounting elements (16).

5. The assembly of claim 4 wherein the discrete component contact member mounting elements (16) comprise pads on the surface for the substrate (11) within component connecting areas (15), the layer of an anisotropically conductive adhesive (24) comprising means for surface mounting electrical components to the panel assembly.

6. The assembly of claim 1, 4 or 5 wherein the substrate (11) comprises a metal board.

7. The assembly of claim 6 wherein the substrate comprises a anodized aluminum board (11a).

8. The assembly of claim 1, 4 or 5 wherein the substrate comprises a flexible substrate (211).

9. The assembly of claim 8 wherein the assembly (312) comprises a plurality of separate flexible plastic film layers.

10. The assembly of claim 1, 4, 5, 6 or 8 wherein the substrate (11) has a thermal coefficient of expansion significantly different from the electrical components to be mounted thereon, the anisotropically conductive adhesive layer (24) comprising a compliant interconnection to maintain electrical continuity despite relative movement due to different coefficients of thermal expansion.

11. The assembly of claim 1, 4 or 5 further comprising a plurality of apertures (27, 30) extending through the substrate (11), a solidified electrically conductive polymer (28, 33) being disposed within the apertures (27, 30).

12. The assembly of claim 1, 4 or 5 wherein the traces (14) comprise a solidified electrically conductive polymer.

13. The assembly of claim 1 or 8 wherein the assembly comprises a plurality of separate substrate layers (111, 111a, 111b, 111c) and an anisotropically conductive adhesive layer (128) disposed over discrete component contact member mounting elements (122) on at least one separate substrate layer.

14. The assembly of claim 13 wherein a dielectric cover layer (124) overlies at least a portion of circuitry on each separate substrate layer (111, 111a, 111b, 111c), the dielectric

cover layer forming the substrate on which the circuitry of each layer is defined.

15. The assembly of claim 14 wherein each dielectric cover layer (111, 111a, 111b, 111c) is formed of a solidified dielectric ink.

16. The assembly of claim 15 wherein a solidified conductive polymer on each separate substrate layer (111, 111a, 111b, 111c) define conductive traces (118a, 118b, 118c, 118d).

17. The assembly of claim 12 wherein said separate substrate layers comprise flexible plastic film.

18. The assembly of claim 8 wherein said assembly is serially interconnected to other of said assemblies.

19. The assembly of claim 12 wherein said multilayer assembly is serially interconnected to other of said assemblies.

20. A method of interconnecting a plurality of electrical components (20, 21), comprising the steps of: surface mounting the components (20, 21) on a substrate (11) to interconnect electrically conductive mounting elements (16) to respective component leads (22) overlying the respective mounting elements (16), the improvement comprising the step of depositing a layer of anisotropically conductive adhesive (24), over a plurality of separate component connecting areas (15) on the substrate surface, a plurality of mounting elements extending into each component connecting area (15), the leads being positioned in registry with the corresponding mounting elements, the layer of anisotropically conductive adhesive being electrically conductive only normal to the substrate and only between leads (22) disposed in registry with corresponding mounting element (16), the anisotropically conductive adhesive mechanically securing each of the components (20, 21) to the substrate.

21. The method of claim 20 comprising the further step of forming a dielectric cover layer (18) over the circuitry on the exterior of the component connecting areas (15) by disposing a dielectric ink thereon.

22. The method of claim 20 comprising the further step of forming multiple substrate layers by depositing conductive traces (118a, 118b, 118c) on successive dielectric substrate layers (111a, 111b, 111c), formed by the dielectric ink overlying circuitry on each next adjacent layer.

23. The method of claim 22 comprising the step of defining apertures (132), extending through multiple substrate layers (111a, 111b, 111c) to substrate (111) and depositing a conductive ink in the apertures (132) to interconnect conductive traces (118w, 118y, 118z) on separate substrate layers (111a, 111b, 111c).

24. The method of claim 23 comprising the step of depositing a conductive ink on the substrate layers (111a, 111b, 111c) to form the conductive traces (118x, 118y and 118z).

25. The method of fabricating circuit panel assemblies comprising the steps of:

advancing a substrate (11) along a path of travel;

applying a liquid electrically conductive polymer in a pattern on at least one surface of the advancing substrate to define at least one distinct panel element along the substrate; and

drying the polymer to form a plurality of electrically conductive traces (14) and so as to define at least one component connecting area on said at least one panel element, with said conductive traces (14) including component contact member mounting pads which extend into respective component connecting areas (15) characterized by the further steps of:

applying a liquid adhesive mixture of conductive particles dispersed in a non-conductive thermoplastic resin binder onto the advancing substrate so as to form an anisotropically conductive adhesive layer (24) which covers each of said component connecting areas (15) and the portions of the electrically conductive traces (14) therein, and then drying the liquid anisotropically conductive adhesive mixture to a substantially dry, non-tacky condition; and

disposing a cover layer (18) upon the portions of the advancing substrate outside each of said component connecting areas, so as to protectively cover those portions of the electrically conductive traces outside each of said component connecting areas; whereby

electrical components may be electrically connected to the contact member mounting pads without the use of solder.

26. The method of fabricating circuit panel assemblies as described in claim 25 wherein the cover layer (18) is a liquid dielectric polymer material.

27. The method of fabricating circuit panel assemblies as described in claim 25 wherein the cover layer (18) is a layer of flexible plastic film.

28. The method of fabricating circuit panel assemblies as described in claim 26 or 27 further comprising the steps of applying a liquid electrically conductive polymer in a pattern on the surface of the cover layer and drying the polymer to form a plurality of conductive traces, disposing an additional cover layer over desired portions of said traces so as to protectively cover those portions of the electrically conductive traces whereby a multilayer circuit panel assembly is formed wherein electrical connections may be made without the use of solder.

29. The method of fabricating circuit panel assemblies as described in claim 26 or 27 wherein the substrate is a continuous strip of flexible substrate and the circuit panel assemblies are fabricated to form a strip (310) of serially interconnected preformed assemblies.

30. The method of fabricating circuit panel assemblies as described in claim 29 further comprising the steps of:

advancing a plurality of flexible plastic film substrates along parallel, superposed and spaced apart paths of travel;

applying the liquid adhesive mixture of conductive particles dispersed in a non-conductive thermoplastic resin binder onto at least portions of the opposing surfaces of the advancing substrates so as to form a conductive adhesive layer which covers portions of the electrically conductive traces thereon; and

guiding the advancing substrates into a superposed contiguous relationship, with the conductive adhesive electrically interconnecting aligned traces of each adjacent pair of substrates and physically securing the superposed substrates, and with the panel elements in registry to form a strip (334) of serially interconnected multilayer circuit panel assemblies.

31. The method of fabricating circuit panel assemblies as described in claim 29 or 30 further including the step of severing the substrate between the repeated patterns and so as to separate the panel element and form separate flexible panel assemblies.

AMENDED CLAIMS

[received by the International Bureau on 19 September 1986 (19.09.86);
original claims 1-31 replaced by new claims 1-15 (3 pages)]

1. A preformed circuit panel assembly of the type comprising electrical circuitry defined on a common panel for interconnecting electrical components disposed thereon, the panel assembly comprising:

a substrate (11);

a pattern of electrically conductive traces (14), defined on at least one surface of the substrate (11) defining the electrical circiutry;

a plurality of component connecting areas (15);

discrete component contact member mounting elements (16) within respective component connecting areas (15), the contact member mounting element (15) communicating with corresponding conductive traces (14); the panel assembly being characterized in that a layer of anisotropically conductive adhesive (24), electrically conductive normal to the layer, overlies a plurality of component contact member mounting elements (16) within each component connecting area (15), the anisotropically conductive adhesive being electrically insulative between discrete component contact member mounting elements (16), wherein the substrate (11) has a thermal coefficient of expansion significantly different from the electrical components to be mounted thereon, the anisotropically conductive adhesive layer (24) comprising a compliant interconnection to maintain electrical continuity despite relative movement due to different coefficients of thermal expansion, whereby

a plurality of electrical components can be connected to the electrical circuitry without the use of solder.

2. The assembly of claim 1 wherein the anisotropically conductive adhesive comprises a plurality of conductive particles randomly dispersed within a nonconductive adhesive binder to form a plurality of multiparticle clusters.

3. The assembly of claim 1 wherein the layer of anisotropically conductive adhesive completely overlaps at least

one entire component connecting area (15), the layer of anisotropically conductive adhesive (24) mechanically securing an electrical component to the substrate and electrically interconnecting the electrical component to the discrete contact member mounting elements (16), the mounting elements comprising pads on the surface of the substrate (11) within component connecting areas (15), and the layer of an anisotropically conductive adhesive (24) comprising means for surface mounting electrical components to the panel assembly.

4. The assembly of claim 1, 2 or 3 wherein the substrate (11) comprises a metal board.

5. The assembly of claim 1, 2 or 3 wherein the substrate comprises a flexible substrate (211).

6. The assembly of claim 5 wherein the assembly (312) comprises a plurality of separate flexible plastic film layers.

7. The assembly of claim 1, 2, 3 or 5 further comprising a plurality of apertures (27, 30) extending through the substrate (11), a solidified electrically conductive polymer (28, 33) being disposed within the apertures (27, 30).

8. The assembly of claim 1 or 5 wherein the assembly comprises a plurality of separate substrate layers (111, 111a, 111b, 111c) and an anisotropically conductive adhesive layer (128) disposed over discrete component contact member mounting elements (122) on at least one separate substrate layer.

9. The assembly of claim 8 wherein a dielectric cover layer (124) overlies at least a portion of circuitry on each separate substrate layer (111, 111a, 111b, 111c), the dielectric cover layer forming the substrate on which the circuitry of each layer is defined.

10. The assembly of claim 9 wherein each dielectric cover layer (111, 111a, 111b, 111c) is formed of a solidified dielectric ink.

11. The assembly of claim 5 wherein said assembly is serially interconnected to other of said assemblies.

12. A method of interconnecting a plurality of electrical components (20, 21), comprising the steps of: surface mounting the components (20, 21) on a substrate (11) to interconnect electrically conductive mounting elements (16) to respective component leads (22) overlying the respective mounting elements (16), the improvement comprising the step of depositing a layer of anisotropically conductive adhesive (24), over a plurality of separate component connecting areas (15) on the substrate surface, a plurality of mounting elements extending into each component connecting area (15), the leads being positioned in registry with the corresponding mounting elements, the layer of anisotropically conductive adhesive being electrically conductive only normal to the substrate and only between leads (22) disposed in registry with corresponding mounting element (16), the anisotropically conductive adhesive mechanically securing each of the components (20, 21) to the substrate.

13. The method of claim 12 comprising the further step of forming at least one dielectric cover layer (18) over the circuitry on the exterior of the component connecting areas (15) by disposing a dielectric ink thereon.

14. The method of claim 13 comprising the further step of forming multiple substrate layers by depositing conductive traces (118a, 118b, 118c) on successive dielectric substrate layers (111a, 111b, 111c), formed by the dielectric ink overlying circuitry on each next adjacent layer.

15. The method of claim 12, 13 or 14 comprising the further step of advancing at least one substrate along a path to form a plurality of interconnected panel assemblies.

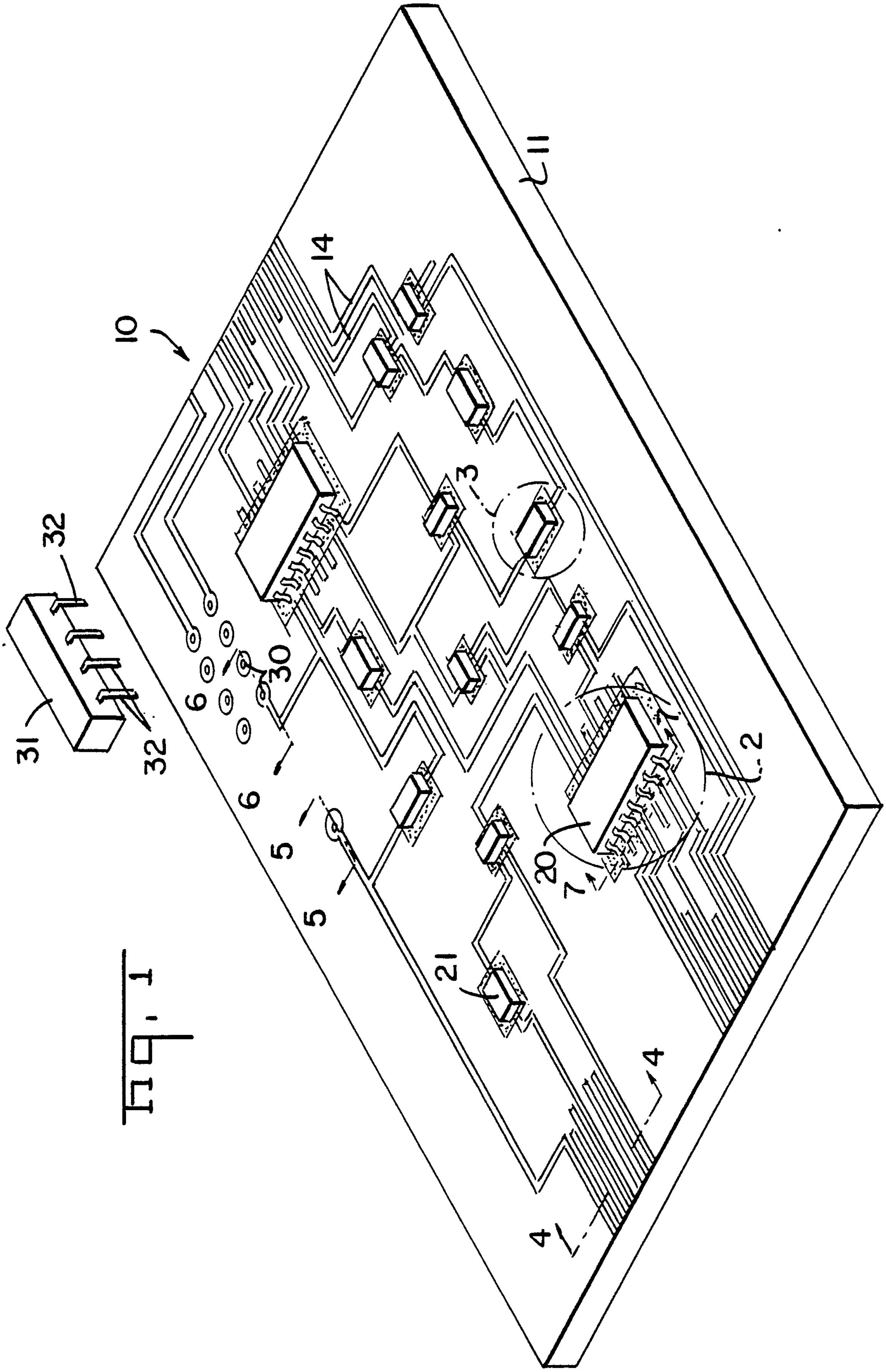

Fig. 1

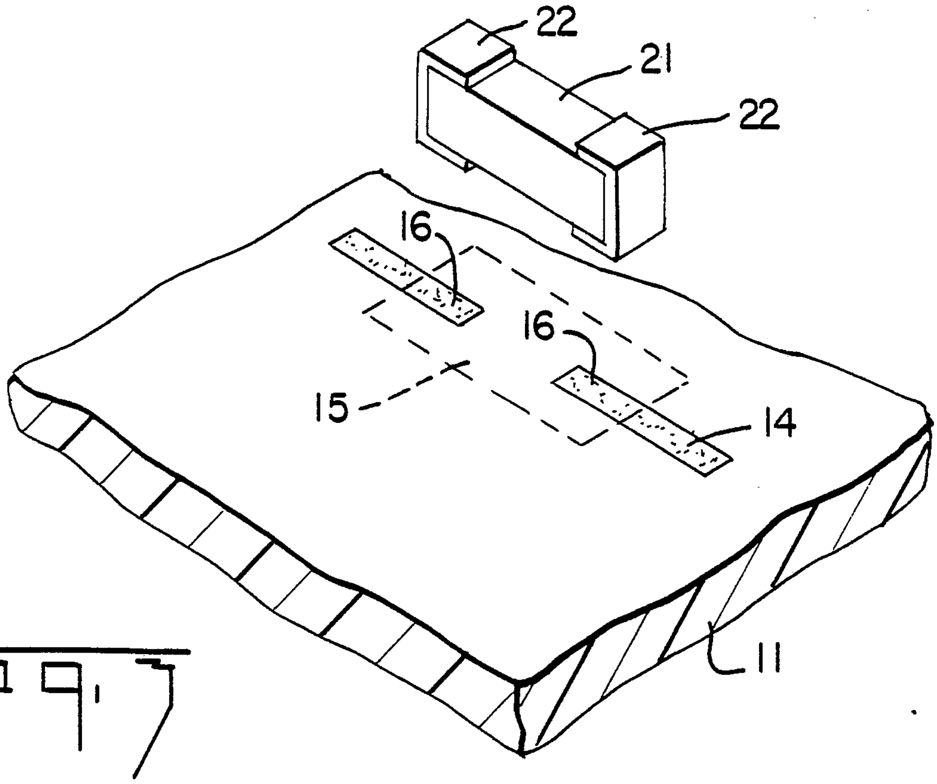

Fig. 3

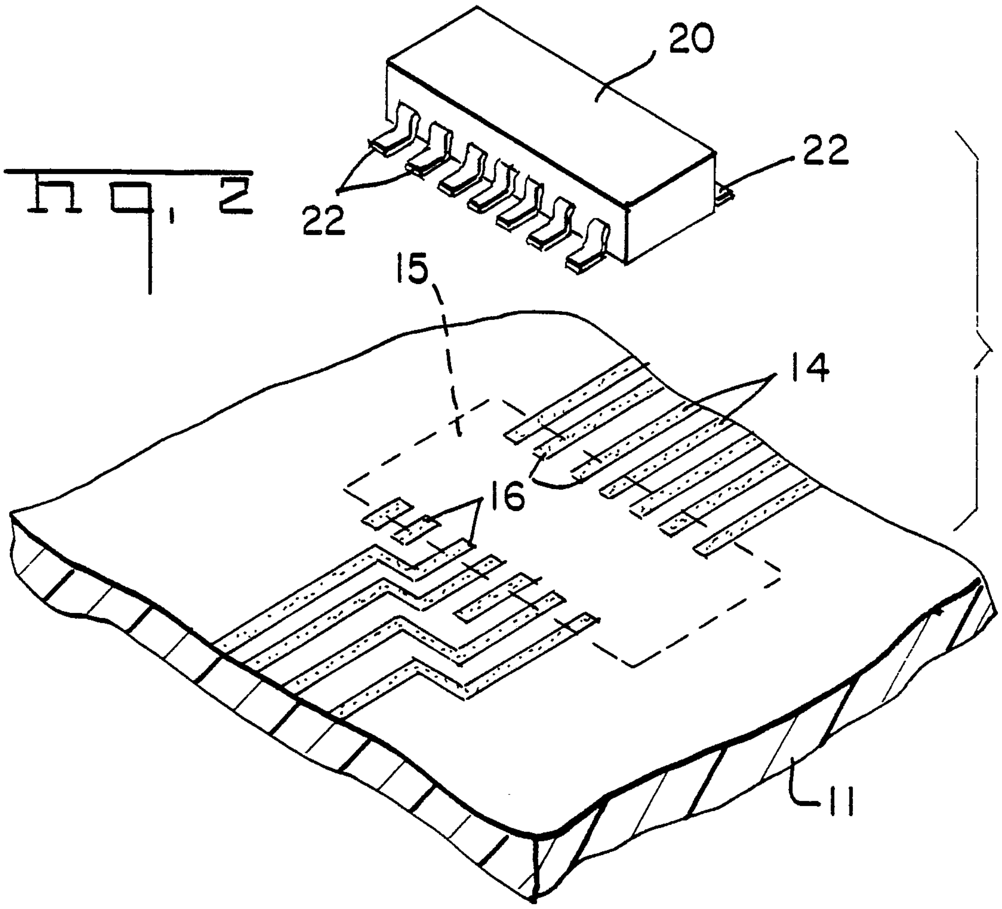

Fig. 2

Fig. 4

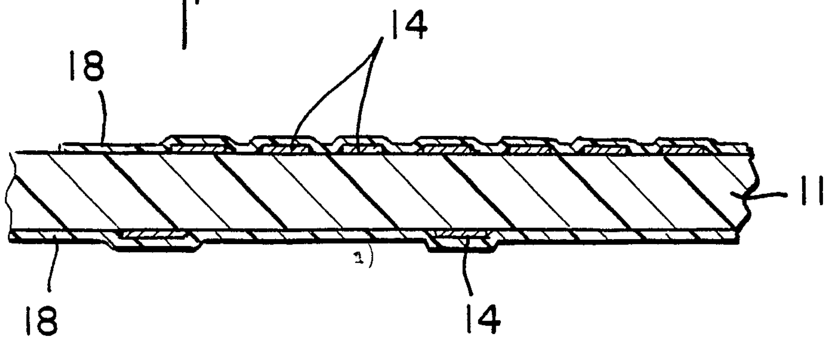

Fig. 5

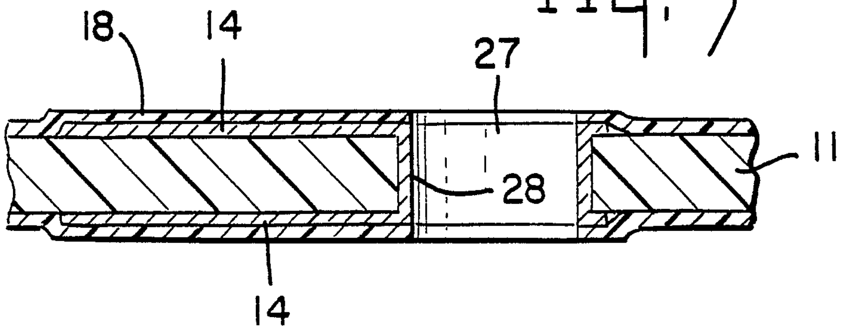

Fig. 6

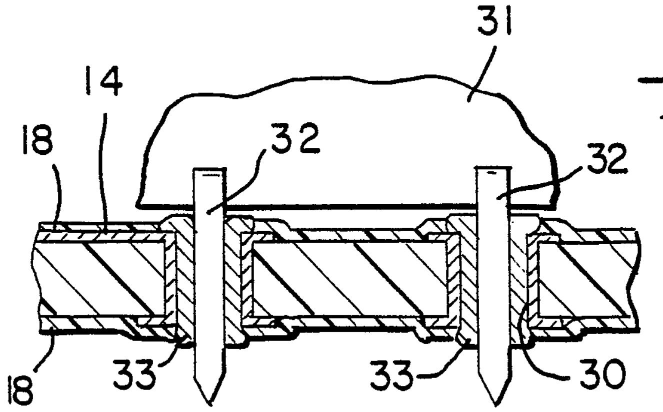

Fig. 7

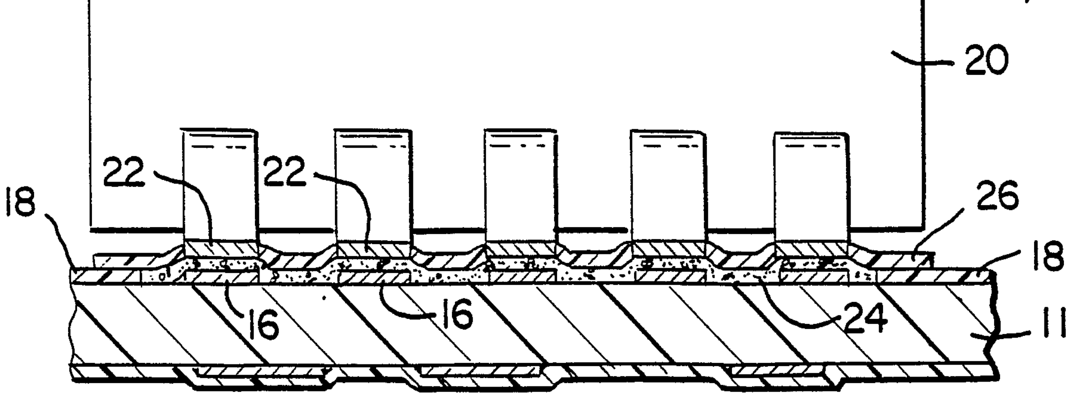

Fig. 8

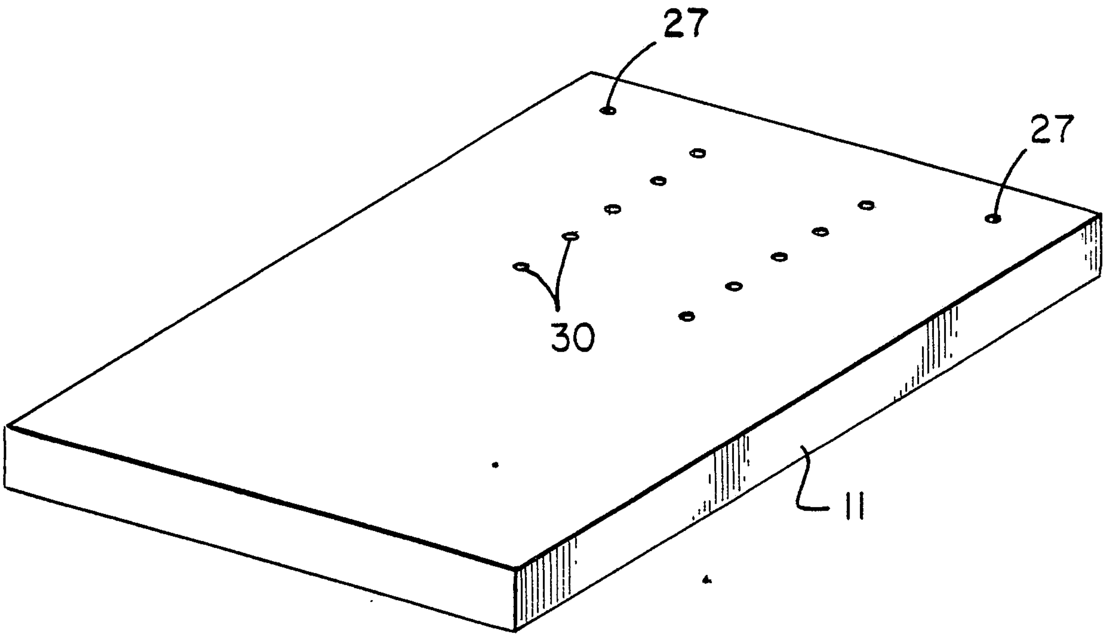

Fig. 9

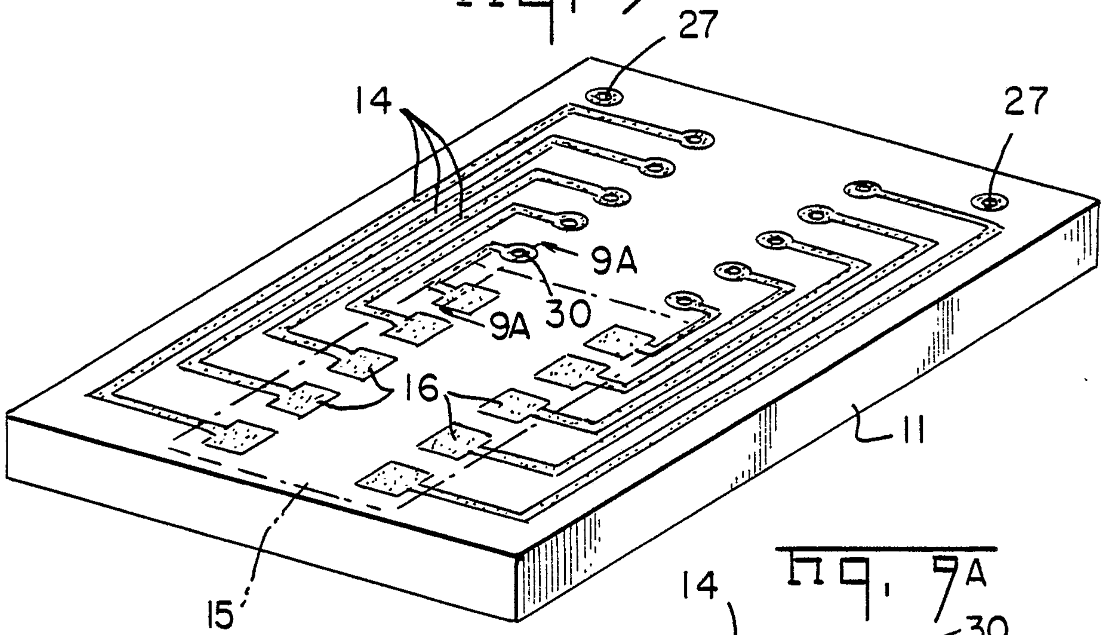

Fig. 9A

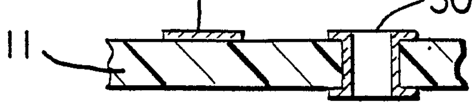

Fig. 10

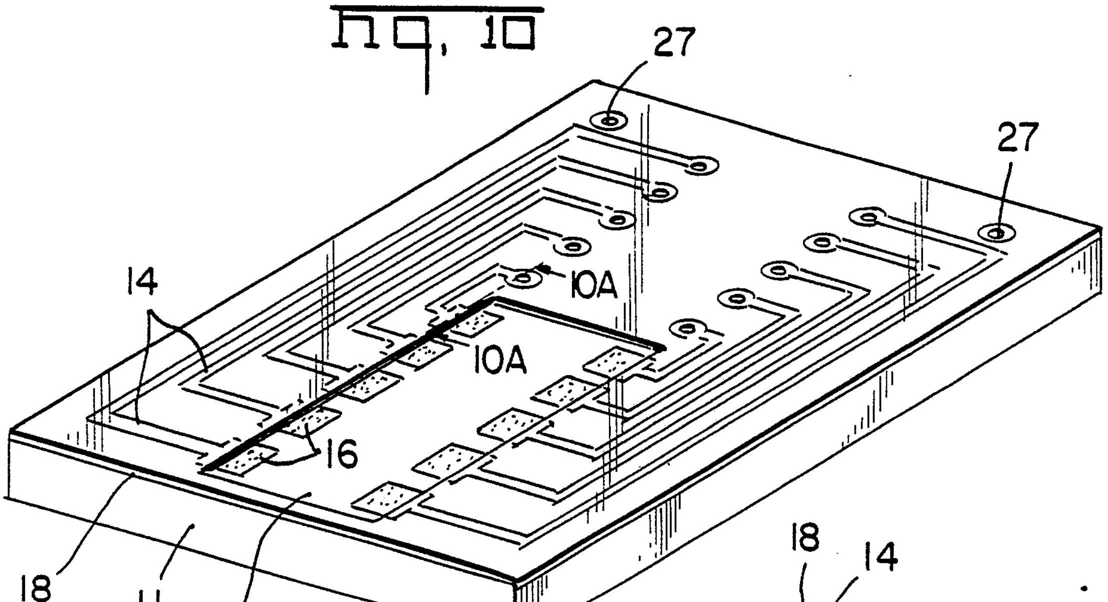

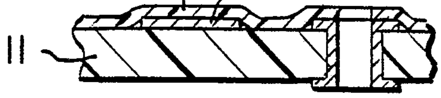

Fig. 10A

Fig. 11

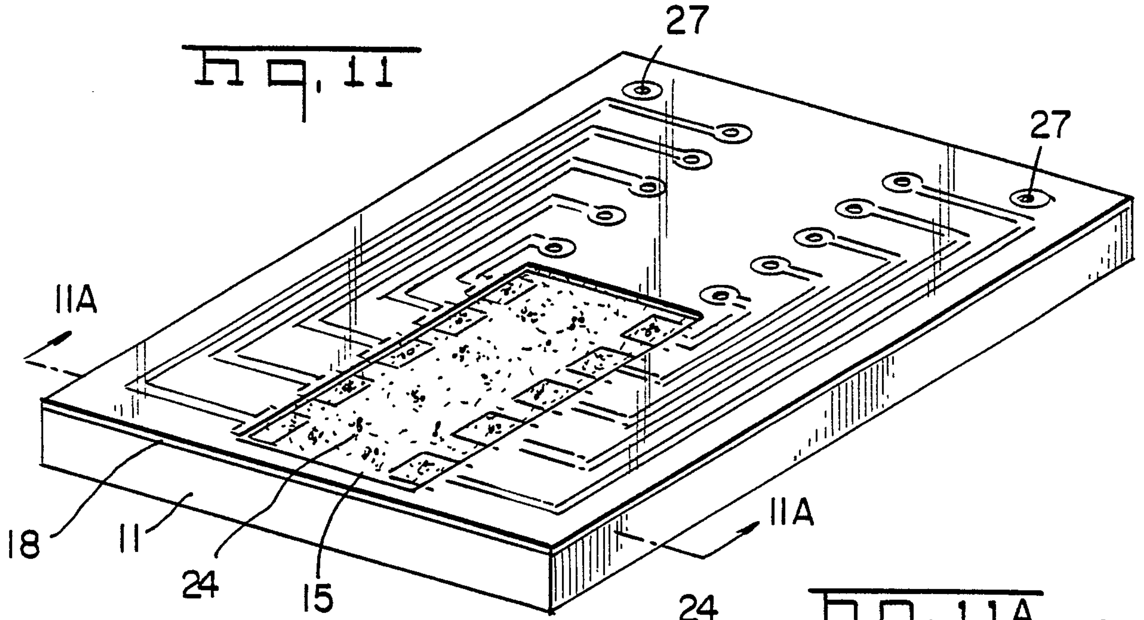

Fig. 11A

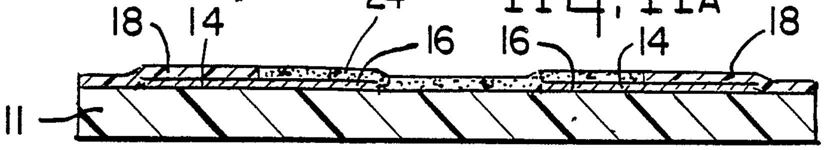

Fig. 12

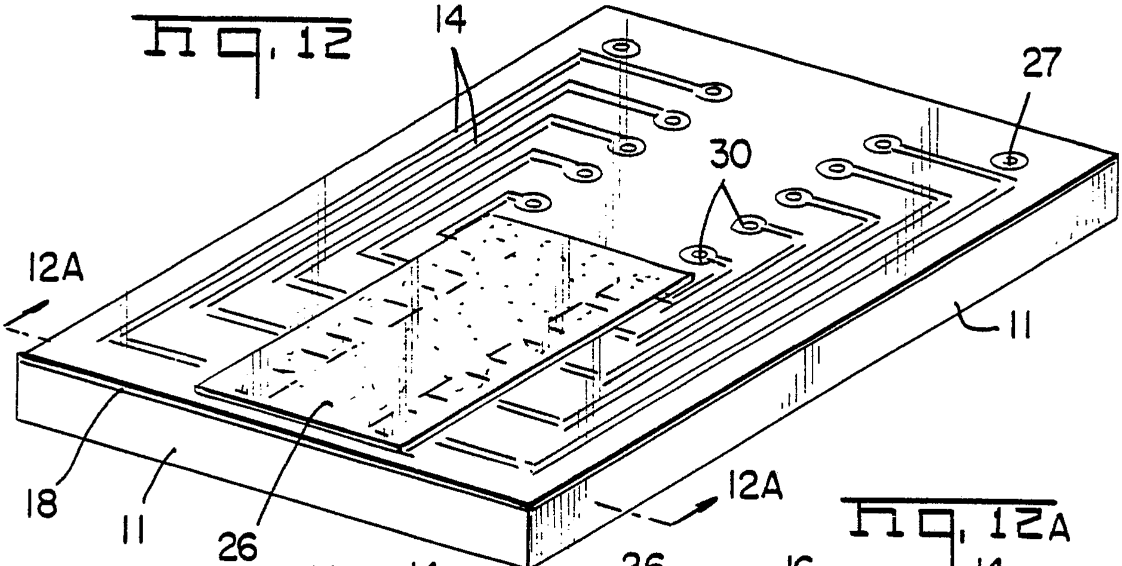

Fig. 12A

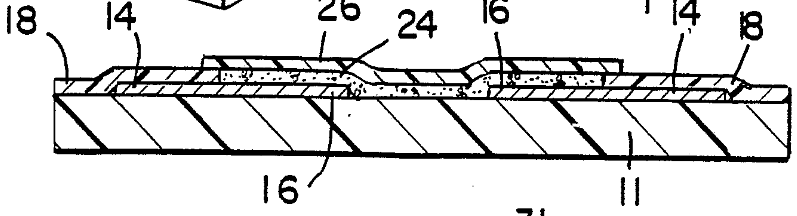

Fig. 13

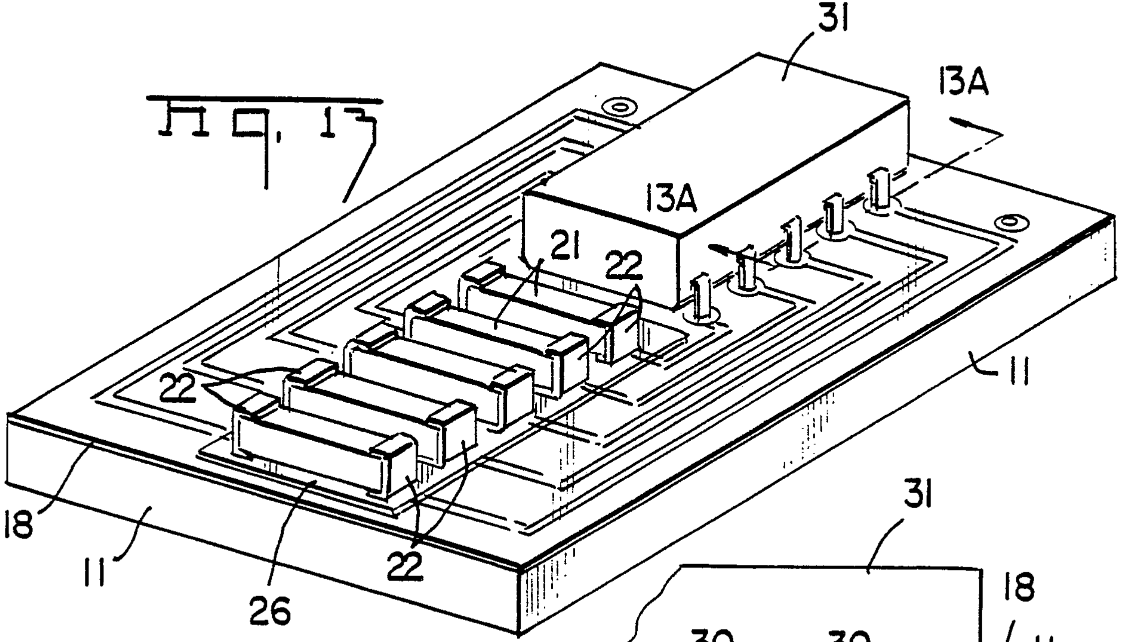

Fig. 13A

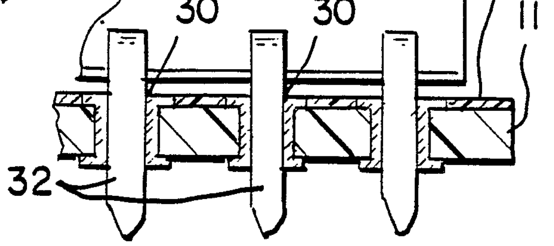

Fig. 13B

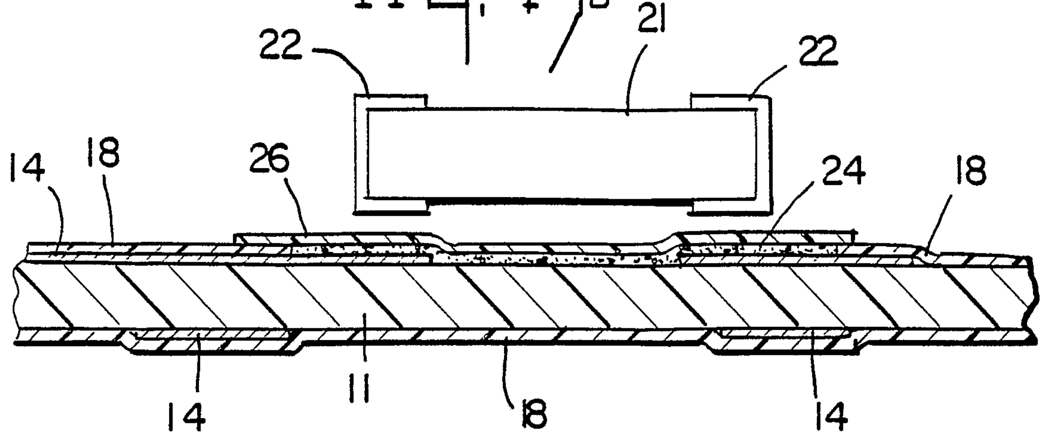

Fig. 13C

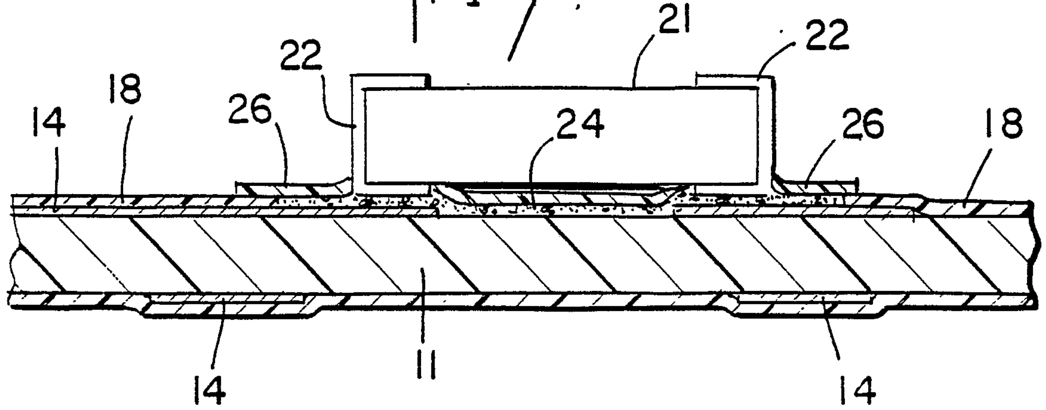

Fig. 14

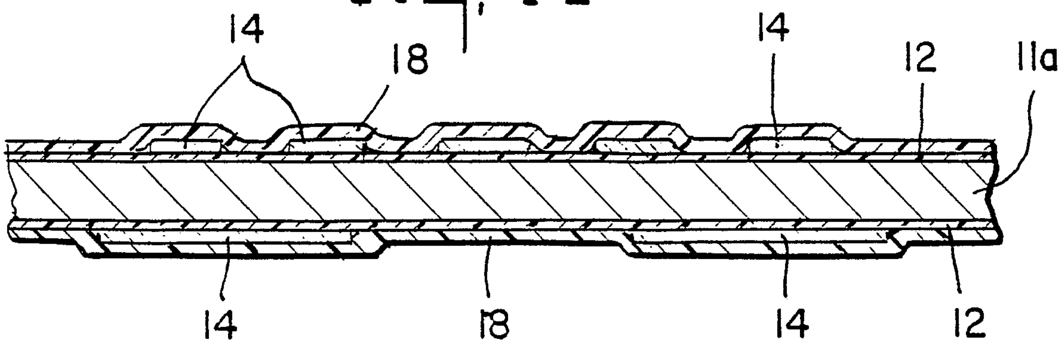

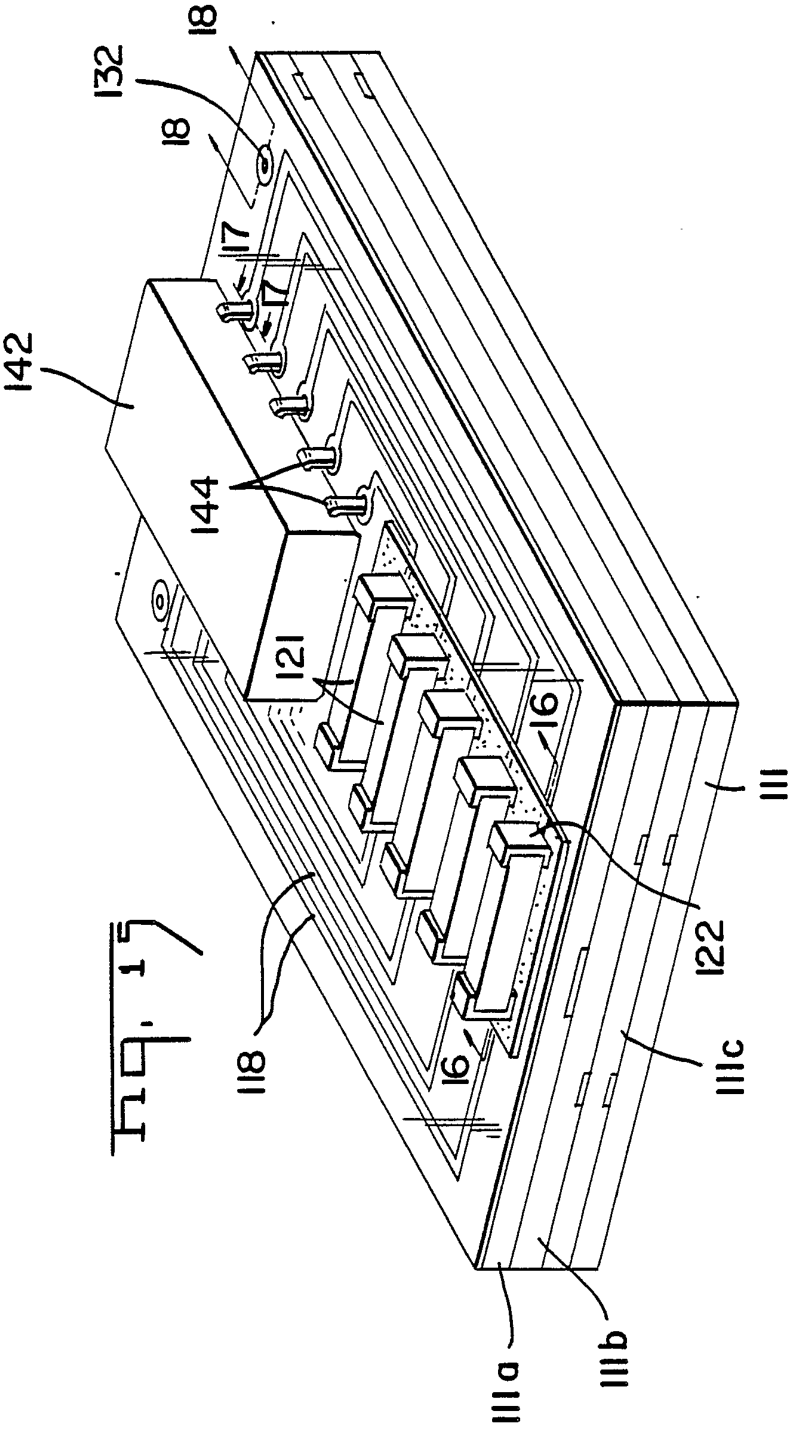

Fig. 15

Fig. 16

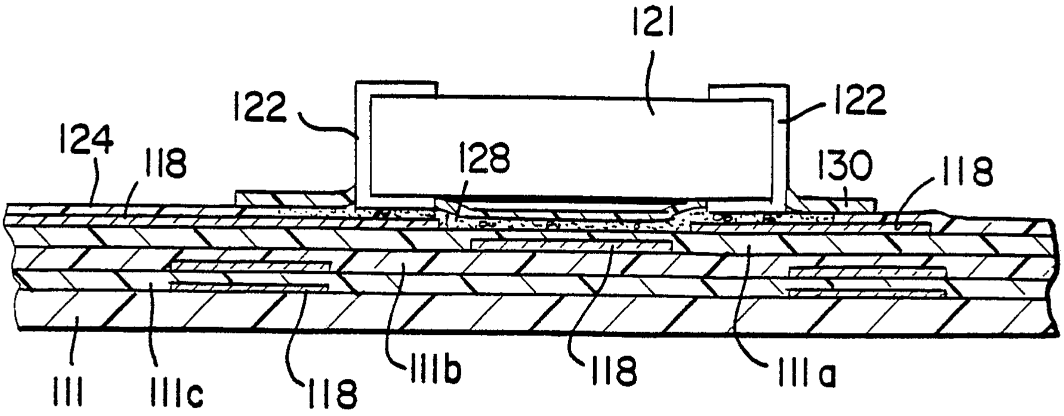

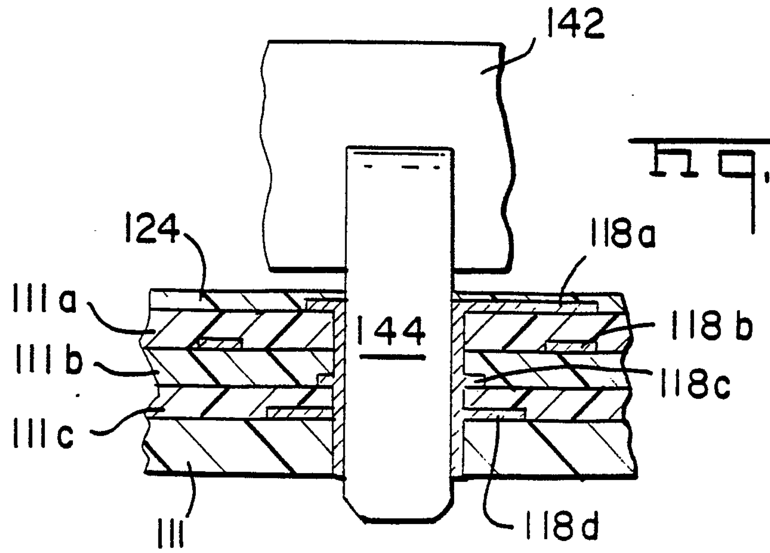

Fig. 17

Fig. 18

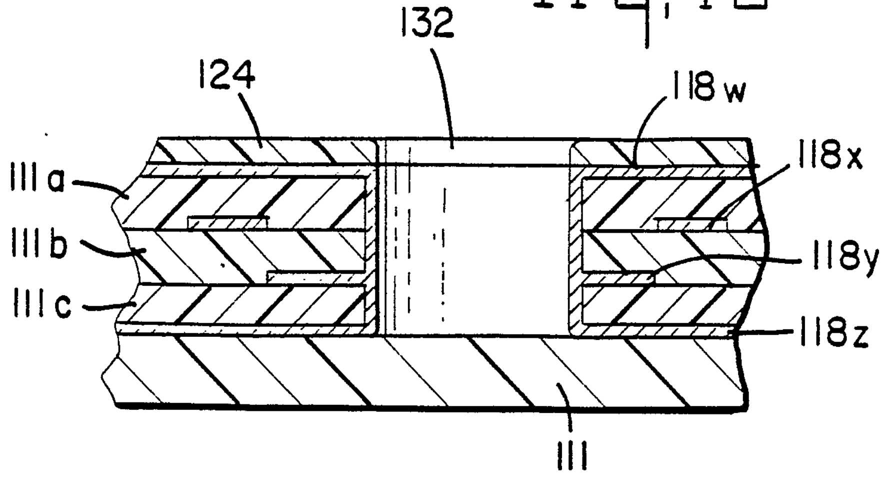

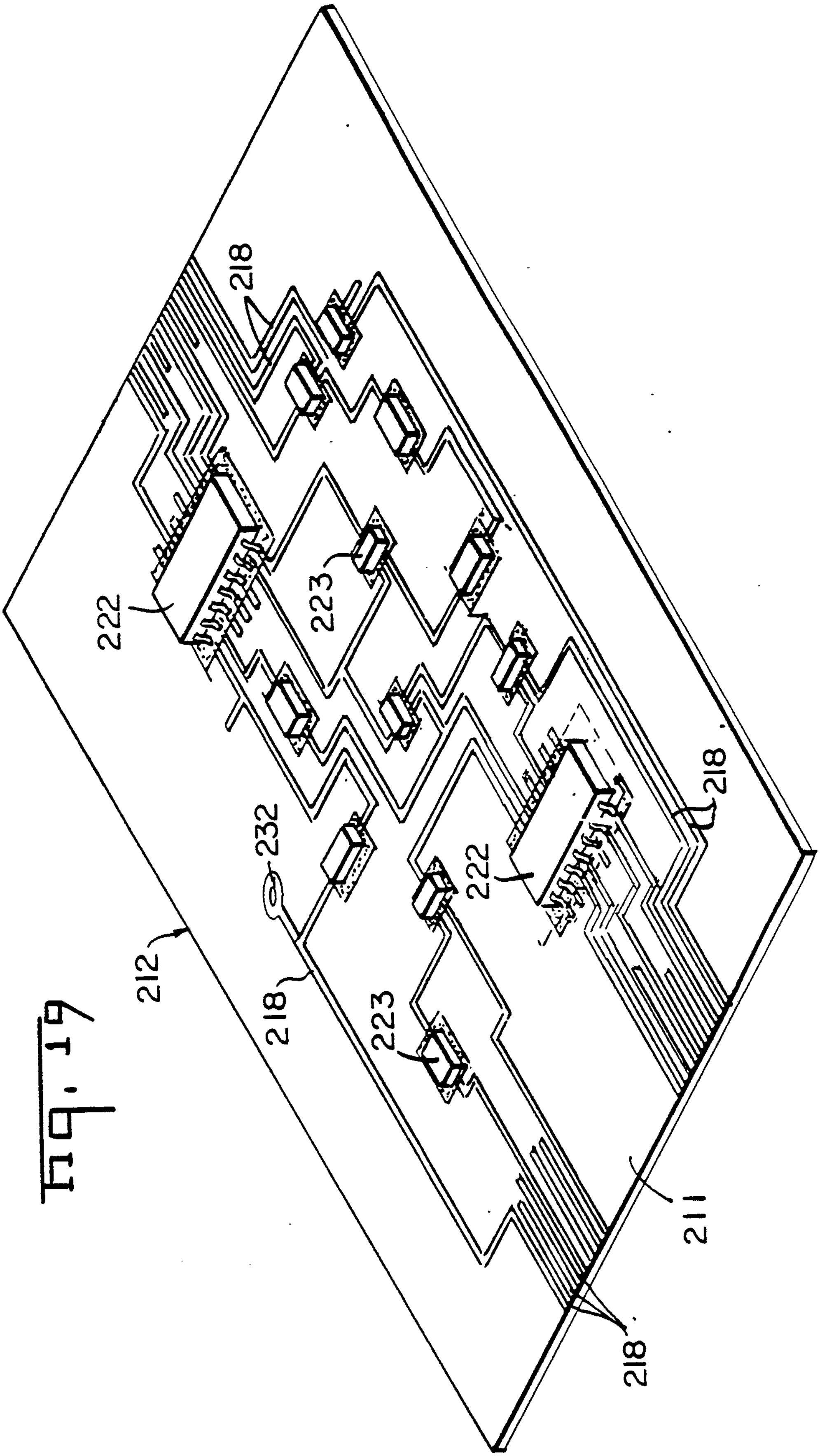

Fig. 19

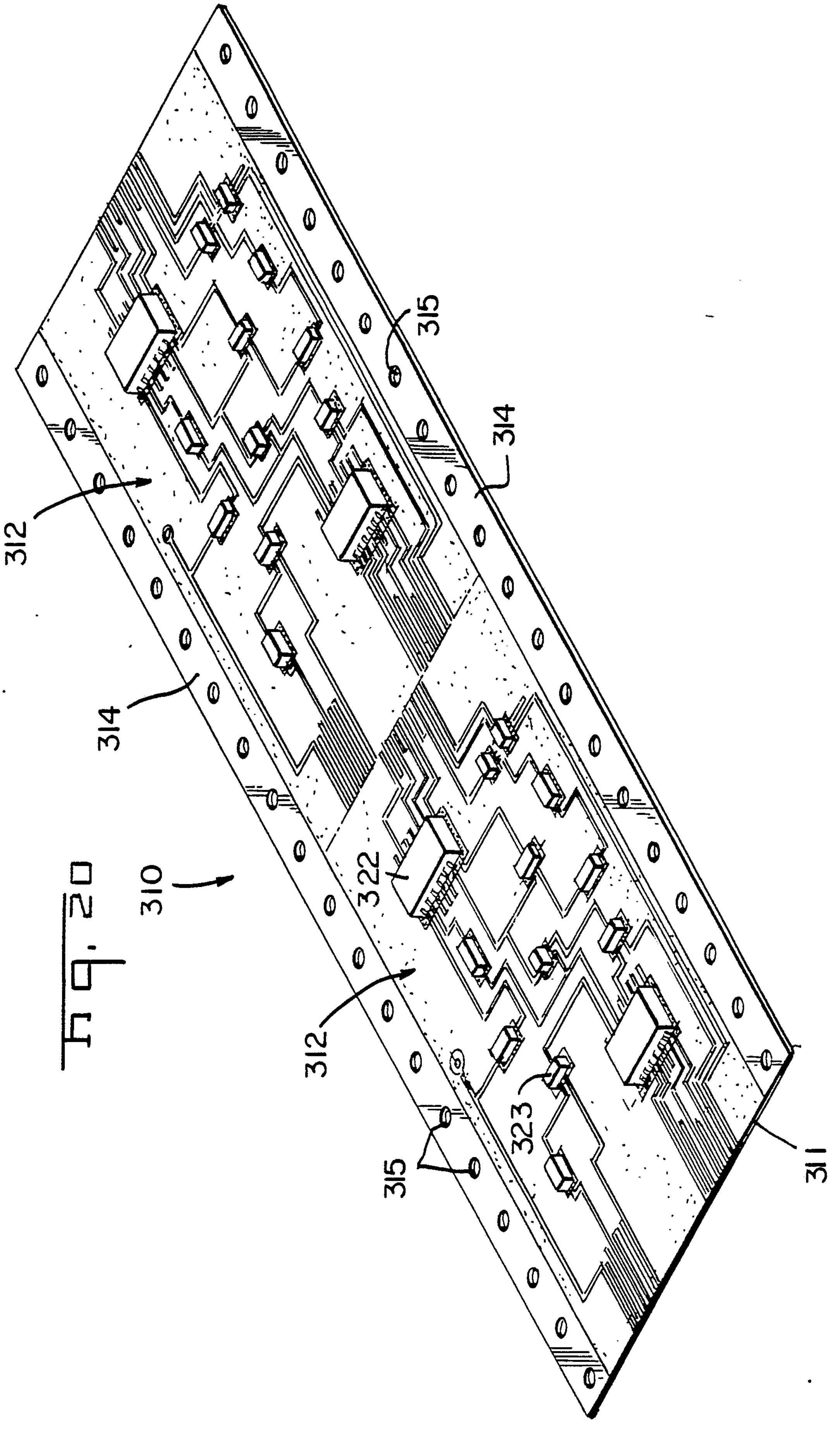

Fig. 20

Fig. 21

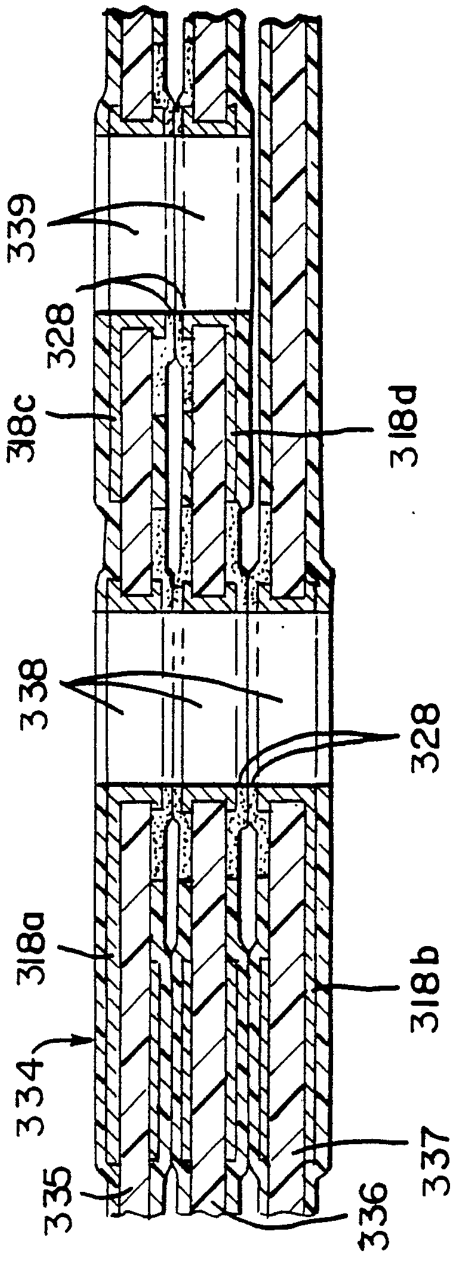

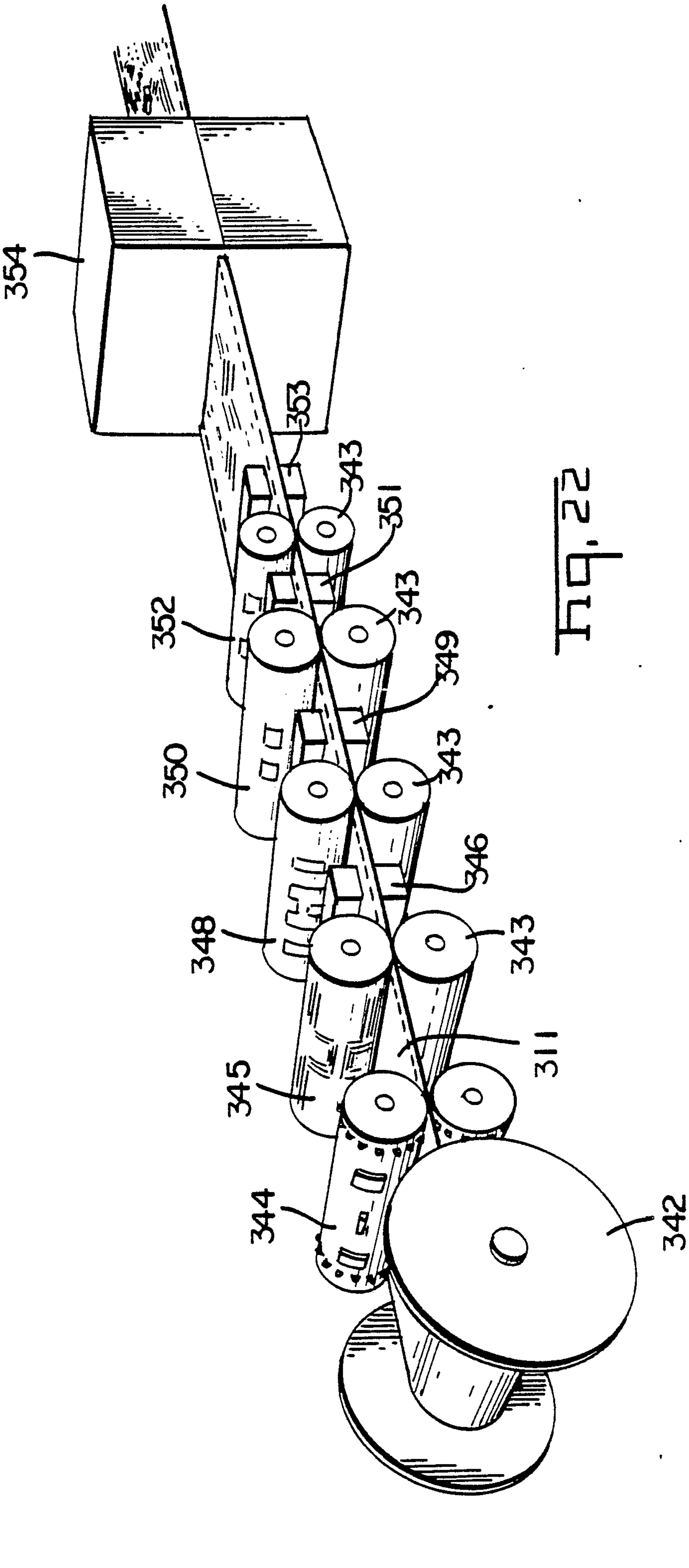

Fig. 22

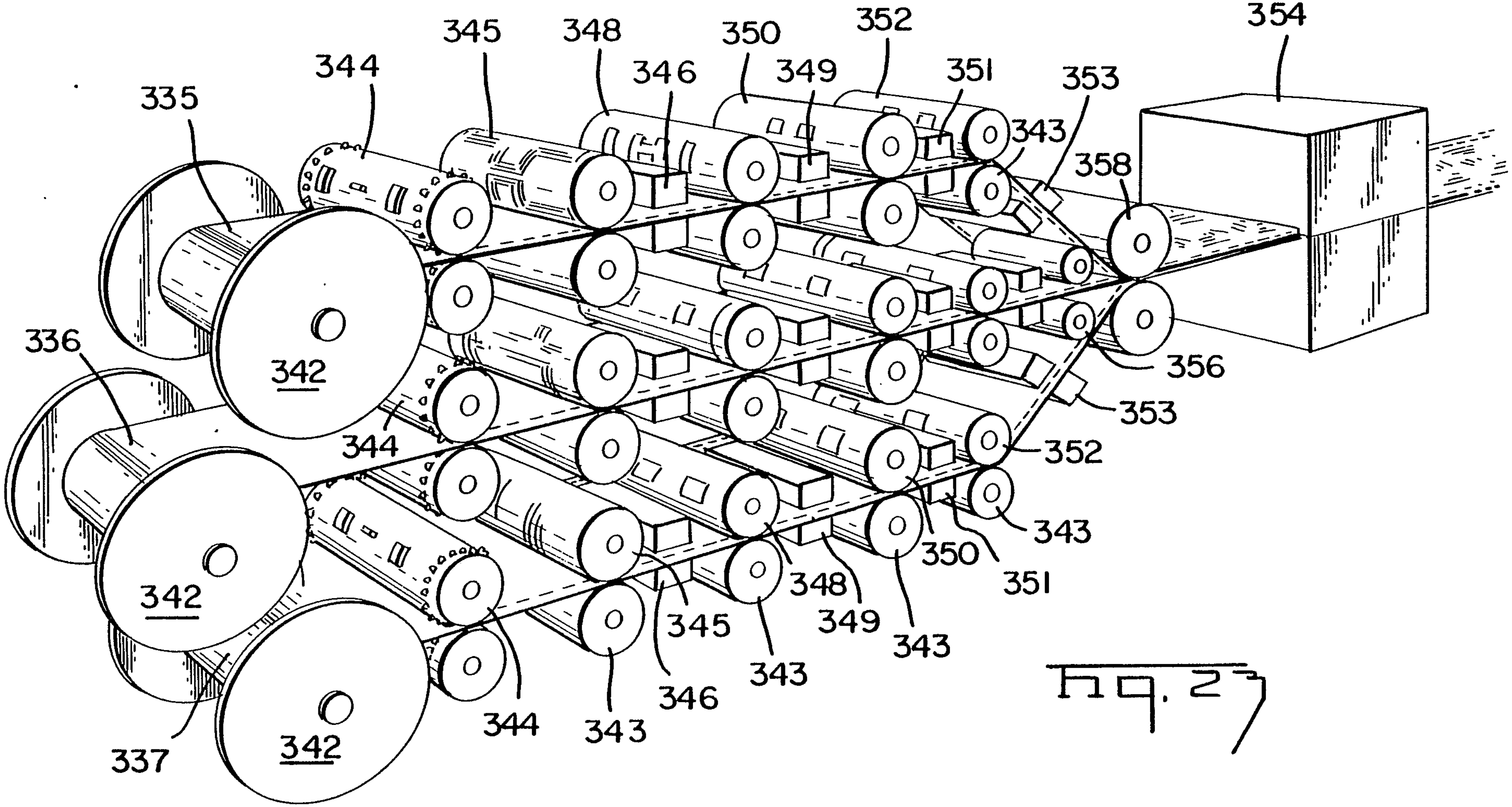
335
344
345
348
346
350
349
352
351
353
343
358
354
336
342
342
342
344
356
353
352
343
350
351
348
349
343
345
346
343
344
343
337

Fig. 27

/

INTERNATIONAL SEARCH REPORT

International Application No PCT/US 86/00641

I. CLASSIFICATION OF SUBJECT MATTER (if several classification symbols apply, indicate all) [6]

According to International Patent Classification (IPC) or to both National Classification and IPC

IPC^4: H 05 K 3/32; H 05 K 3/46

II. FIELDS SEARCHED

Minimum Documentation Searched [7]

Classification System	Classification Symbols
IPC^4	H 05 K H 01 R

Documentation Searched other than Minimum Documentation to the Extent that such Documents are Included in the Fields Searched [8]

III. DOCUMENTS CONSIDERED TO BE RELEVANT [9]

Category [8]	Citation of Document, [11] with indication, where appropriate, of the relevant passages [12]	Relevant to Claim No. [13]
X	FR, A, 2282148 (K.K.SEIKOSHA) 12 March 1976, see page 1, lines 24-39; page 3, line 26-page 4, line 14; page 5, line 34 - page 6, line 15	1-2,4-5, 20
A		30
	--	
X	FR, A, 2475302 (ROGERS CORP.) 7 August 1981, see page 3, line 7 - page 5, line 23; page 8, line 28 - page 9, line 32; figures 1,2-3	1-2,4-5,8, 12
A		20,25,30
	--	
A	GB, A, 2078448 (STANDARD TELEPHONES & CABLES) 6 January 1982, see page 1, line 114 - page 2, line 5; page 2, lines 58-71	11-16,21-24,28
	--	
A	DE, A, 2915240 (MITSUI ELECTRIC CO. LTD.) 3 January 1980, see page 11, last paragraph	19,29,31
	--	
A	US, A, 3165672 (BURROUGH CORP.) 12 January 1965, see column 2, lines 5-32	6-7
	--	
A	GB, A, 1223785 (G.T. SCHJELDAHL CO.) 3 March 1971	./.

* Special categories of cited documents: [10]

"A" document defining the general state of the art which is not considered to be of particular relevance

"E" earlier document but published on or after the international filing date

"L" document which may throw doubts on priority claim(s) or which is cited to establish the publication date of another citation or other special reason (as specified)

"O" document referring to an oral disclosure, use, exhibition or other means

"P" document published prior to the international filing date but later than the priority date claimed

"T" later document published after the international filing date or priority date and not in conflict with the application but cited to understand the principle or theory underlying the invention

"X" document of particular relevance; the claimed invention cannot be considered novel or cannot be considered to involve an inventive step

"Y" document of particular relevance; the claimed invention cannot be considered to involve an inventive step when the document is combined with one or more other such documents, such combination being obvious to a person skilled in the art.

"&" document member of the same patent family

IV. CERTIFICATION

Date of the Actual Completion of the International Search 27th June 1986	Date of Mailing of this International Search Report 30 JUL 1986
International Searching Authority EUROPEAN PATENT OFFICE	Signature of Authorized Officer M. VAN MOL

International Application No.PCT/US 86/00641

III. DOCUMENTS CONSIDERED TO BE RELEVANT (CONTINUED FROM THE SECOND SHEET)

Category *	Citation of Document, with indication, where appropriate, of the relevant passages	Relevant to Claim No
E	WO, A, 86/2204 (AMP INC.) 10 April 1986, see page 1, line 17 - page 2, line 24; page 2, line 31 - page 4, line 2; page 5, line 3 - page 6, line 2; page 8, lines 18-31; example 1	1-5,8,20-21,25-26,30

ANNEX TO THE INTERNATIONAL SEARCH REPORT ON

INTERNATIONAL APPLICATION NO. PCT/US 86/00641 (SA 12779)

This Annex lists the patent family members relating to the patent documents cited in the above-mentioned international search report. The members are as contained in the European Patent Office EDP file on 14/07/86

The European Patent Office is in no way liable for these particulars which are merely given for the purpose of information.

Patent document cited in search report	Publication date	Patent family member(s)	Publication date
FR-A- 2282148	12/03/76	NL-A- 7509591	17/02/76
		DE-A- 2536361	26/02/76
		GB-A- 1477780	29/06/77
		CH-A- 607666	29/09/78
		US-A- 4113981	12/09/78
		JP-A- 51020941	19/02/76
		JP-A- 51021192	20/02/76
FR-A- 2475302	07/08/81	BE-A- 887273	14/05/81
		GB-A- 2068645	12/08/81
		JP-A- 56122193	25/09/81
GB-A- 2078448	06/01/82	None	
DE-A- 2915240	03/01/80	GB-A,B 2040589	28/08/80
		JP-A- 55004946	14/01/80
		US-A- 4437140	13/03/84
		JP-A- 55011617	26/01/80
		JP-A- 55018033	07/02/80
		JP-A- 55071086	28/05/80
		JP-A- 55075257	06/06/80
		JP-A- 55075258	06/06/80
US-A- 3165672		None	
GB-A- 1223785	03/03/71	None	
WO-A- 862204		None	

For more details about this annex :
see Official Journal of the European Patent Office, No. 12/82