Innovation, Sciences et Développement économique Canada
Office de la Propriété Intellectuelle du Canada

Innovation, Science and Economic Development Canada
Canadian Intellectual Property Office

CA 2792363 C 2018/11/06

(11)(21) 2 792 363

(12) BREVET CANADIEN
CANADIAN PATENT

(13) C

(86) Date de dépôt PCT/PCT Filing Date: 2011/03/28
(87) Date publication PCT/PCT Publication Date: 2011/10/06
(45) Date de délivrance/Issue Date: 2018/11/06
(85) Entrée phase nationale/National Entry: 2012/09/06
(86) N° demande PCT/PCT Application No.: SE 2011/050342
(87) N° publication PCT/PCT Publication No.: 2011/123028
(30) Priorité/Priority: 2010/04/01 (SE1050317-5)

(51) Cl.Int./Int.Cl. *B25D 9/12* (2006.01), *E21B 1/02* (2006.01), *B25D 17/24* (2006.01)

(72) Inventeur/Inventor:
OSTLING, THOMAS, SE

(73) Propriétaire/Owner:
EPIROC ROCK DRILLS AKTIEBOLAG, SE

(74) Agent: FETHERSTONHAUGH & CO.

(54) Titre : PERFORATEUR MECANIQUE ET UTILISATION ASSOCIEE POUR EMPECHER LA SURVENUE ET LA DIFFUSION DE BULLES DE CAVITATION

(54) Title: ROCK DRILLING MACHINE AND USE THEREOF FOR HINDERING OCCURRENCE AND SPREADING OF CAVITATION BUBBLES

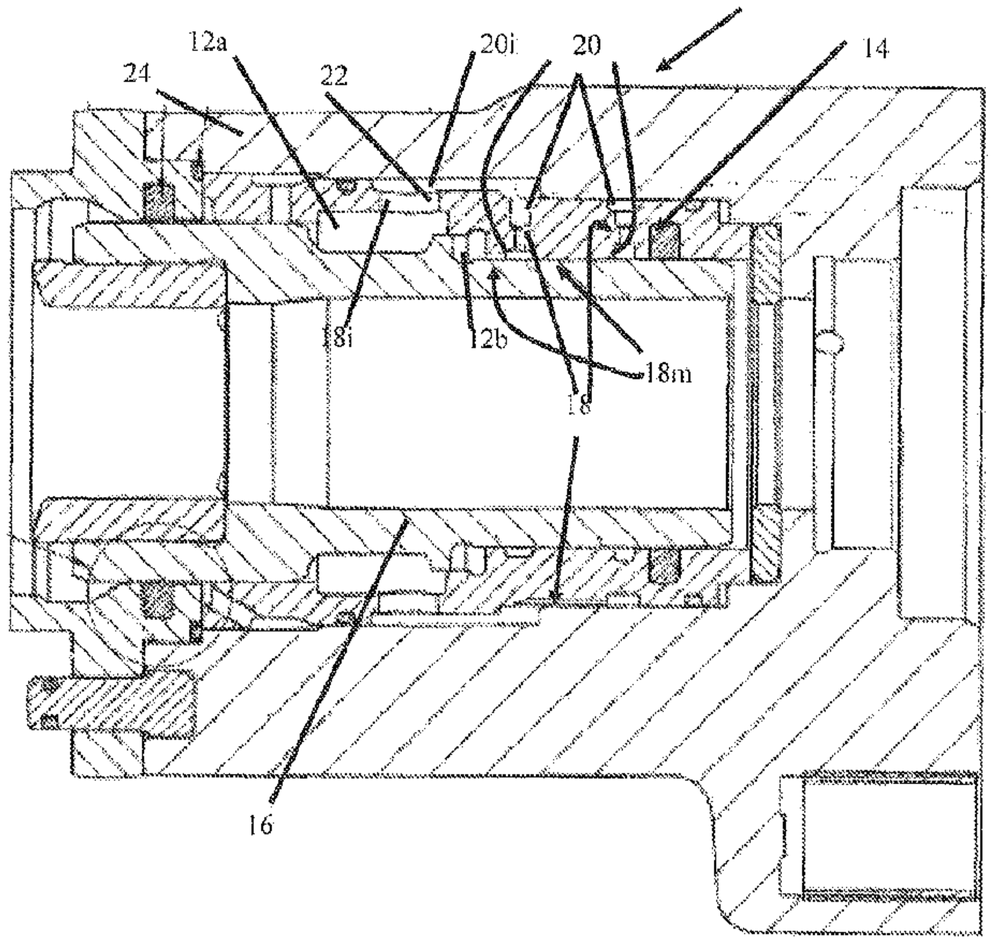

(57) Abrégé/Abstract:
Rock drilling machine (10) comprising a piston that is arranged to move back and forth in a chamber (12a, 12b) when the rock drilling machine (10) is in use, a cavitation-sensitive component (14), and an oil channel that is arranged to extend between the chamber (12a, 12b) and said cavitation-sensitive component (14). The oil channel comprises a series of restrictions (18) and oil volumes (20) to hinder the movement of cavitation bubbles through said oil channel.

(12) INTERNATIONAL APPLICATION PUBLISHED UNDER THE PATENT COOPERATION TREATY (PCT)

(19) World Intellectual Property Organization
International Bureau

(43) International Publication Date
6 October 2011 (06.10.2011)

PCT

(10) International Publication Number
WO 2011/123028 A1

(51) International Patent Classification:
B25D 9/12 (2006.01) *B25D 17/24* (2006.01)
E21B 1/02 (2006.01)

(21) International Application Number:
PCT/SE2011/050342

(22) International Filing Date:
28 March 2011 (28.03.2011)

(25) Filing Language: Swedish

(26) Publication Language: English

(30) Priority Data:
1050317-5 1 April 2010 (01.04.2010) SE

(71) Applicant *(for all designated States except US)*: **Atlas Copco Rock Drills AB** [SE/SE]; S-701 91 Örebro (SE).

(72) Inventor; and
(75) Inventor/Applicant *(for US only)*: **ÖSTLING, Thomas** [SE/SE]; Skivlingsvägen 8, S-633 58 Eskilstuna (SE).

(74) Agent: **Valea AB**; Lindholmspiren 5, S-417 56 Göteborg (SE).

(81) Designated States *(unless otherwise indicated, for every kind of national protection available)*: AE, AG, AL, AM, AO, AT, AU, AZ, BA, BB, BG, BH, BR, BW, BY, BZ, CA, CH, CL, CN, CO, CR, CU, CZ, DE, DK, DM, DO, DZ, EC, EE, EG, ES, FI, GB, GD, GE, GH, GM, GT, HN, HR, HU, ID, IL, IN, IS, JP, KE, KG, KM, KN, KP, KR, KZ, LA, LC, LK, LR, LS, LT, LU, LY, MA, MD, ME, MG, MK, MN, MW, MX, MY, MZ, NA, NG, NI, NO, NZ, OM, PE, PG, PH, PL, PT, RO, RS, RU, SC, SD, SE, SG, SK, SL, SM, ST, SV, SY, TH, TJ, TM, TN, TR, TT, TZ, UA, UG, US, UZ, VC, VN, ZA, ZM, ZW.

(84) Designated States *(unless otherwise indicated, for every kind of regional protection available)*: ARIPO (BW, GH, GM, KE, LR, LS, MW, MZ, NA, SD, SL, SZ, TZ, UG, ZM, ZW), Eurasian (AM, AZ, BY, KG, KZ, MD, RU, TJ, TM), European (AL, AT, BE, BG, CH, CY, CZ, DE, DK, EE, ES, FI, FR, GB, GR, HR, HU, IE, IS, IT, LT, LU, LV, MC, MK, MT, NL, NO, PL, PT, RO, RS, SE, SI, SK, SM, TR), OAPI (BF, BJ, CF, CG, CI, CM, GA, GN, GQ, GW, ML, MR, NE, SN, TD, TG).

Published:

— *with international search report (Art. 21(3))*

— *with amended claims (Art. 19(1))*

(54) Title: ROCK DRILLING MACHINE AND USE THEREOF FOR HINDERING OCCURRENCE AND SPREADING OF CAVITATION BUBBLES

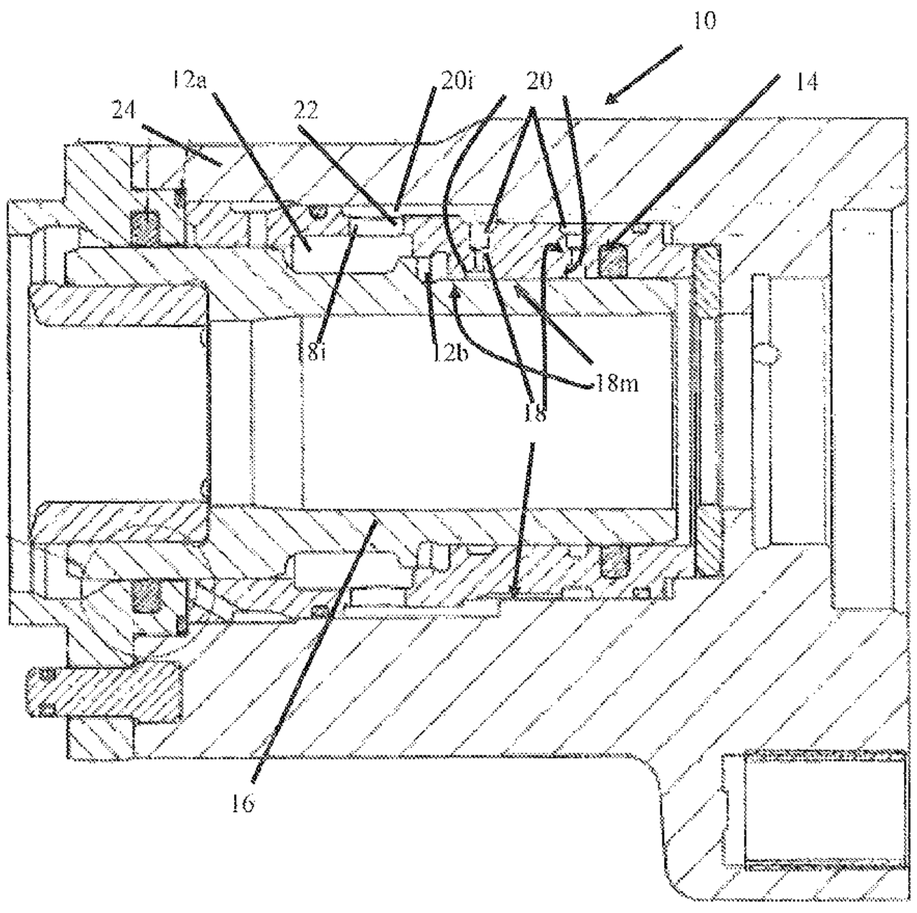

Fig. 1

(57) Abstract: Rock drilling machine (10) comprising a piston that is arranged to move back and forth in a chamber (12a, 12b) when the rock drilling machine (10) is in use, a cavitation-sensitive component (14), and an oil channel that is arranged to extend between the chamber (12a, 12b) and said cavitation-sensitive component (14). The oil channel comprises a series of restrictions (18) and oil volumes (20) to hinder the movement of cavitation bubbles through said oil channel.

WO 2011/123028 A1

Rock drilling machine and use thereof for hindering occurrence and spreading of cavitation bubbles

TECHNICAL FIELD

The present invention concerns a rock drilling machine and a method to hinder the occurrence and spreading of cavitation bubbles in a rock drilling machine.

BACKGROUND OF THE INVENTION

Cavitation is the occurrence of cavities (voids) in liquids in the form of bubbles where the liquid has transformed into a gas when the static pressure in the liquid has decreased. Cavitation is a mixture of gas formation, the release of trapped air in the liquid and the expansion of air bubbles contained in the liquid.

In cases where the cavitation bubbles implode when the static pressure increases, a very thin jet stream with large force can be formed from the bubble which can damage solid surfaces in the vicinity. A blister forms in a low pressure zone and adheres to a solid surface and implodes when the surrounding static pressure increases. The effect is the same as thousands of sharp nails hammering the surface with a large force whereby the material's ultimate tensile strength can be exceeded, which eventually gives rise to a visible loss of material, often leaving thousands of small craters in the material. This is a known phenomenon in hydraulic rock drilling machines.

Cavitation occurs for example in the area around the damper piston, i.e. the component that forces the adapter/drilling steel/bore crown against the rock so that joints can be tightened between impacts, when the damper piston moves forwards and thereby quickly increases the volume between the damper piston and the damper chamber or the machine body. This problem is usually combatted using a one way valve that fills the volume with oil in order to decrease the occurrence of cavitation bubbles (see US 4,993,504). When the damper piston moves forwards, a substantial pressure decrease occurs which leads to cavitation if the oil cannot be replaced at the same rate as the volume increases. Cavitation bubbles therefore occur since the hydraulic pressure is low and the pressure decrease propagates through all hydraulically connected spaces. Oil starts to flow to the area with the lowest pressure from all possible directions. Cavitation bubbles can thereby spread to and/or also occur in places other than in the original space between the damper piston and the damper chamber (machine body. The low pressure causes the oil from surrounding spaces to flow to the low pressure area to re-establish

mean pressure in the damper device. For this reason many drilling machines often have a damper accumulator so that a large volume of oil is readily available to even out the hydraulic pressure, but this is not sufficient to solve the cavitation problem. When the cavitation bubbles finally collapse there is an obvious risk that some of them will be located in the vicinity of sensitive components and will for example damage seals.

SUMMARY OF THE INVENTION

An aim of the present invention is to provide a rock drilling machine that hinders the spreading of already created cavitation bubbles, and filters the pressure decrease so that new cavitation bubbles do not occur in other volumes.

According to an embodiment, there is provided a rock drilling machine that comprises a piston that is arranged to
move back and forth in a chamber when the rock drilling machine is in use, a cavitation-sensitive component and an oil channel that is arranged to extend between the chamber and said cavitation-sensitive component. The oil channel comprises a series of restrictions and oil volumes, i.e. spaces where oil can collect, in order to hinder the movement of cavitation bubbles through said oil channel.

The movement of oil from the spaces hydraulically connected to the chamber is hindered when a pressure decrease occurs in the chamber. The spread and the occurrence of cavitation bubbles is therefore limited to the chamber itself, whose material is resistant to cavitation damage. Such a solution requires no components with moveable parts and it does not for example require the use of a relatively expensive one way valve, which additionally takes up valuable space in the rock drilling machine.

According to an embodiment of the invention said series of restrictions and oil volumes at least includes two restrictions and one oil volume, or at least three restrictions and two oil volumes, etc. Alternatively, said series of restrictions and oil volumes includes one restriction and two oil volumes, two restrictions and three oil volumes etc.

Said series of restrictions can however include as many restrictions and oil volumes as desired so that the oil channel between the chamber and the cavitation-sensitive component is as long as possible. According to an embodiment of the invention said series of restrictions and oil volumes comprises alternating restrictions and oil volumes so

that the pressure decrease that is formed in the chamber is filtered and does not propagate fully to the cavitation-sensitive component, and the flow of oil in the opposite direction is suppressed. The combination of the alternating restrictions and oil volumes in series provides a filter function and a smoother pressure profile adjacent to cavitation-sensitive components in the rock drilling machine.

According to another embodiment of the invention said restrictions are arranged to decrease the cross sectional area of said oil channel by at least 50%, at least 60%, at least 70%, at least 80% or at least 90% or more. It should be noted that the expression "restriction" in this document is intended to include even a gap between adjacent components of the rock drilling machine through which gap oil can for example be sucked into the chamber when a low pressure occurs in the chamber.

According to a further embodiment of the invention at least one restriction is arranged exactly adjacent to the chamber, i.e. where the oil channel meets the chamber.

According to an embodiment of the invention said cavitation-sensitive component of the rock drilling machine is a seal or a guide, such as a bronze guide.

According to another embodiment of the invention said piston is a damper piston, or a piston in the percussion- or breaker part of the rock drilling machine.

According to a further embodiment of the invention the rock drilling machine comprises a plurality of cavitation-sensitive components and/or a plurality of oil channels that are arranged to extend between one or more chambers to one or more cavitation-sensitive components. According to an embodiment of the invention at least one, a plurality, or all of the chambers of the rock drilling machine are substantially isolated from the spaces hydraulically connected to the chamber. Cavitation-sensitive components are consequently isolated from cavitation and are thereby protected from cavitation damage.

According to an embodiment of the invention the total length of said oil channel (measured from the chamber to the cavitation-sensitive component along the oil channel from one end of the oil channel to the other end of the oil channel) is longer than the shortest distance between the chamber and the cavitation-sensitive component

(measured from one end of the oil channel to the other end of the oil channel), at least 50% longer, at least 60% longer, at least 70% longer or even longer.

The present invention also concerns a method to hinder the occurrence and spreading of cavitation bubbles of a rock drilling machine. The method comprises the step of arranging an oil channel that is arranged to extend between a piston chamber and a cavitation-sensitive component of the rock drilling machine to comprise a series of restrictions and oil volumes to hinder the movement of cavitation bubbles through said oil channel.

According to an embodiment of the invention said series of restrictions and oil volumes includes at least two restrictions and one oil volume or at least three restrictions and two oil volumes.

According to another embodiment of the invention said series of restrictions and oil volumes comprises alternating restrictions and oil volumes, or consists of alternating restrictions and oil volumes.

According to further embodiment of the invention said restrictions are arranged to decrease said oil channel's cross sectional area by at least 50%, at least 60%, at least 70%, at least 80% or at least 90% or more.

According to an embodiment of the invention at least one restriction is arranged exactly adjacent to the chamber.

According to another embodiment of the invention said cavitation-sensitive component of the rock drilling machine is a seal or a bronze guide.

According to a further embodiment of the invention said piston is a damper piston or a piston in the percussion or breaker part of the rock drilling machine.

According to an embodiment, there is provided a rock drilling machine comprising a piston that is arranged to move back and forth in a pressure chamber when the rock drilling machine is in use, a cavitation-sensitive component, and an oil channel that is arranged to extend between the pressure chamber and said cavitation-sensitive component, wherein said oil channel comprises a series of restrictions and oil volumes, which are spaces to collect oil, to hinder the spreading of cavitation bubbles through said oil channel, since movement of oil from said oil volumes, which are hydraulically connected to said pressure chamber, is hindered when a pressure decrease occurs in said pressure chamber.

According to another embodiment, there is provided a use of a rock drilling machine as described herein to hinder the occurrence and spreading of cavitation bubbles of a rock drilling machine.

BRIEF DESCRIPTION OF THE DRAWING

In the following, the present invention will be described in more detail with reference to the accompanying schematic drawing, in which:

Figure 1 shows part of a rock drilling machine according to an embodiment of the present invention.

It should be noted that the drawing has not necessarily been drawn to scale and that the dimensions of certain elements may have been exaggerated for the sake of clarity.

DETAILED DESCRIPTION OF EMBODIMENTS

Figure 1 shows part of a rock drilling machine 10 according to an embodiment of the present invention. The rock drilling machine 10 comprises a damper piston 16 that is arranged to move back and forth in a chamber, which in figure 1, due to the damper piston's position in the chamber, is divided into a front part 12a, and a rear part 12b. A seal 14 is arranged at a distance from the chamber 12a, 12b around the damper piston 16.

In the illustrated embodiment the rock drilling machine comprises a first oil channel that comprises a first restriction 18i, a dedicated constriction or obstruction, in order to hinder the passage of cavitation bubbles between the front part of the chamber 12a and the oil volume 20i.

As can be seen in figure 1 there is a plurality of interconnected oil channels through which oil can flow from oil volumes 20 in the rock drilling machine between the seal 14 and the chamber 12a, 12b. These oil channels comprise a series of alternating restrictions 18 and oil volumes 20 which hinder the spreading of cavitation bubbles between the seal 14 and the chamber 12a, 12b when a low pressure occurs in the chamber. The spreading and the occurrence of cavitation bubbles is therefore limited to the chamber 12a, 12b itself, whose material is resistant to cavitation damage. In the illustrated embodiment the chamber 12a, 12b is substantially isolated from all of the spaces 20 hydraulically connected to the chamber. Cavitation-sensitive components, such as the seal 14, are consequently isolated from cavitation and are thereby protected from cavitation damage.

It is favourable if the oil channel that includes a series of restrictions 18, 18i and oil volumes 20, 20i has a long extension, i.e. that its total length (measured from the chamber 12 to the seal 14 along the oil channel) is longer than the shortest distance between the chamber 12 and the seal 14 (measured from one end of the oil channel to the other end of the oil channel), at least 50% longer, at least 60% longer, at least 70%

longer or even longer. A long extension can be achieved for example by the placement of oil volumes 20, 20i and restrictions 18, 18i. A long oil channel gives a long signal time for the pressure decrease and the cavitation bubbles/pressure decrease is/are forced to pass through a larger amount (volume) of oil between the chamber 12 and the seal 14.

According to an embodiment of the invention a restriction 18, i.e. a dedicated' constriction or obstruction, is arranged to decrease an oil channel's cross sectional area by at least 50%, at least 60%, at least 70%, at least 80% or at least 90% or more. It should be noted that the expression "restriction" is intended to also include a gap 18m between adjacent components of the rock drilling machine.

The illustrated embodiment shows a damper piston 16. The present invention can however be used on another piston of the rock drilling machine, for example a piston in the percussion or breaker part of the rock drilling machine such as a percussion piston or a breaker piston.

The present invention also concerns a method to hinder the occurrence and spreading of cavitation bubbles of a rock drilling machine. The method comprises the step of arranging an oil channel that is arranged to extend between a piston chamber and a cavitation-sensitive component of the rock drilling machine to comprise a series of restrictions that decrease an oil channel's cross sectional area by at least 50%, at least 60%, at least 70%, at least 80% or at least 90% or more, and oil volumes to hinder the movement of cavitation bubbles through said oil channel. According to an embodiment of the invention said oil channel is arranged to comprise a series of alternating restrictions and oil volumes.

CLAIMS:

1. Rock drilling machine comprising a piston that is arranged to move back and forth in a pressure chamber when the rock drilling machine is in use, a cavitation-sensitive component, and an oil channel that is arranged to extend between the pressure chamber and said cavitation-sensitive component, wherein said oil channel comprises a series of restrictions and oil volumes, which are spaces to collect oil, to hinder the spreading of cavitation bubbles through said oil channel, since movement of oil from said oil volumes, which are hydraulically connected to said pressure chamber, is hindered when a pressure decrease occurs in said pressure chamber.

2. Rock drilling machine according to claim 1, wherein said series of restrictions and oil volumes includes at least two restrictions and one oil volume, or at least three restrictions and two oil volumes.

3. Rock drilling machine according to claim 1 or claim 2, wherein said series of restrictions and oil volumes comprises alternating restrictions and oil volumes.

4. Rock drilling machine according to any one of claims 1 to 3, wherein said restrictions are arranged to decrease said oil channel's cross sectional area by at least 50%.

5. Rock drilling machine according to any one of claims 1 to 4, wherein said at least one restriction is arranged where the oil channel meets the pressure chamber.

6. Rock drilling machine according to any one of claims 1 to 5, wherein said cavitation-sensitive component of the rock drilling machine is a seal or a guide, such as a bronze guide.

7. Rock drilling machine according to any one of claims 1 to 6, wherein said piston is a damper piston or a piston in the percussion or breaker part of the rock drilling machine.

8. Rock drilling machine according to any one of claims 1 to 7, wherein the total length of said oil channel measured from the pressure chamber to the cavitation-sensitive component along the oil channel is at least 50% longer than the shortest distance between the pressure chamber and the cavitation-sensitive component measured from one end of the oil channel to the other end of the oil channel.

9. Rock drilling machine according to any one of claims 1 to 7, wherein the total length of said oil channel measured from the pressure chamber to the cavitation-sensitive component along the oil channel is at least 60% longer than the shortest distance between the pressure chamber and the cavitation-sensitive component measured from one end of the oil channel to the other end of the oil channel.

10. Rock drilling machine according to any one of claims 1 to 7, wherein the total length of said oil channel measured from the pressure chamber to the cavitation-sensitive component along the oil channel is at least 70% longer than the shortest distance between the pressure chamber and the cavitation-sensitive component measured from one end of the oil channel to the other end of the oil channel.

11. Use of a rock drilling machine according to any one of claims 1 to 10 to hinder the occurrence and spreading of cavitation bubbles of a rock drilling machine.

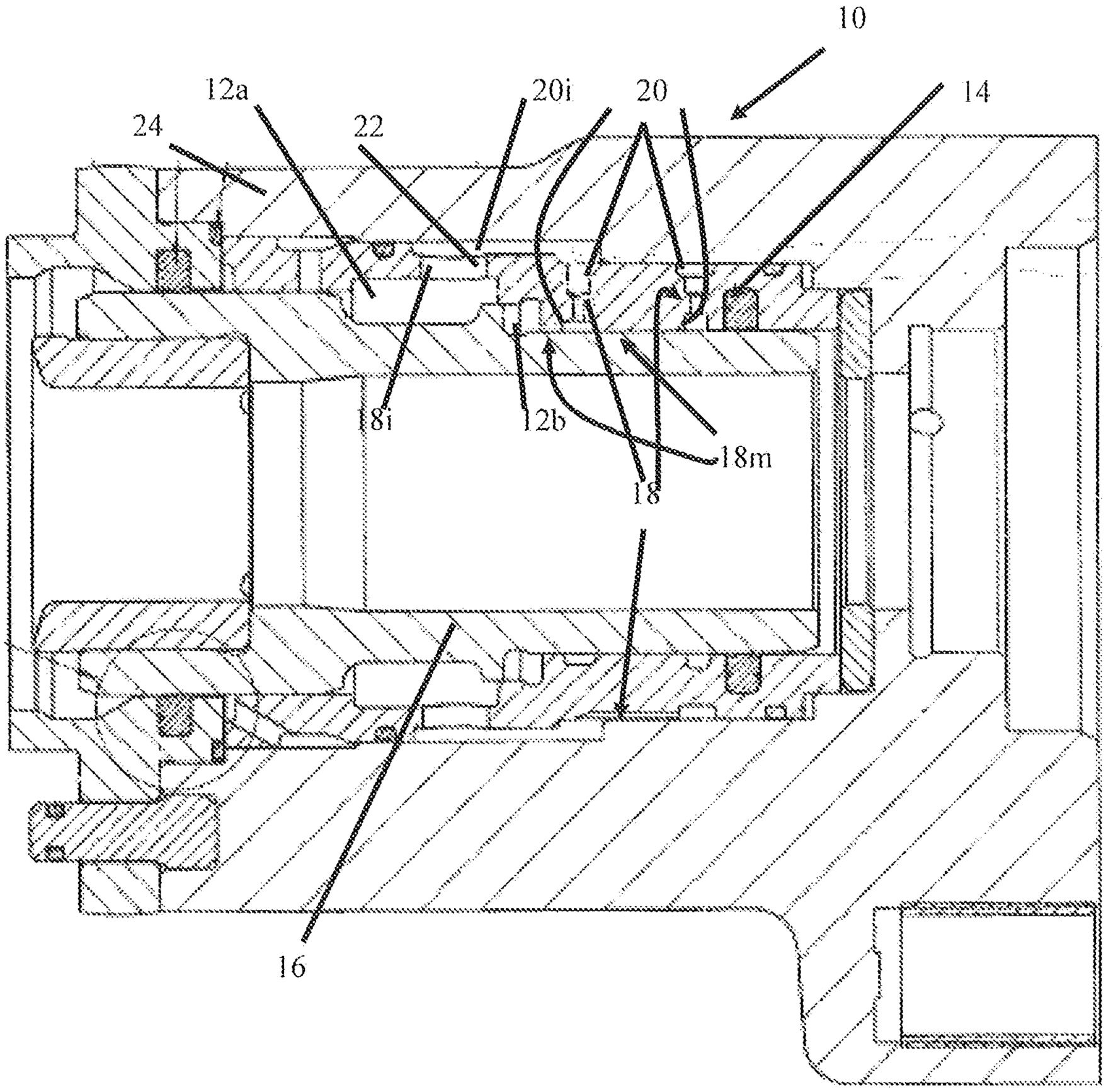

Fig. 1

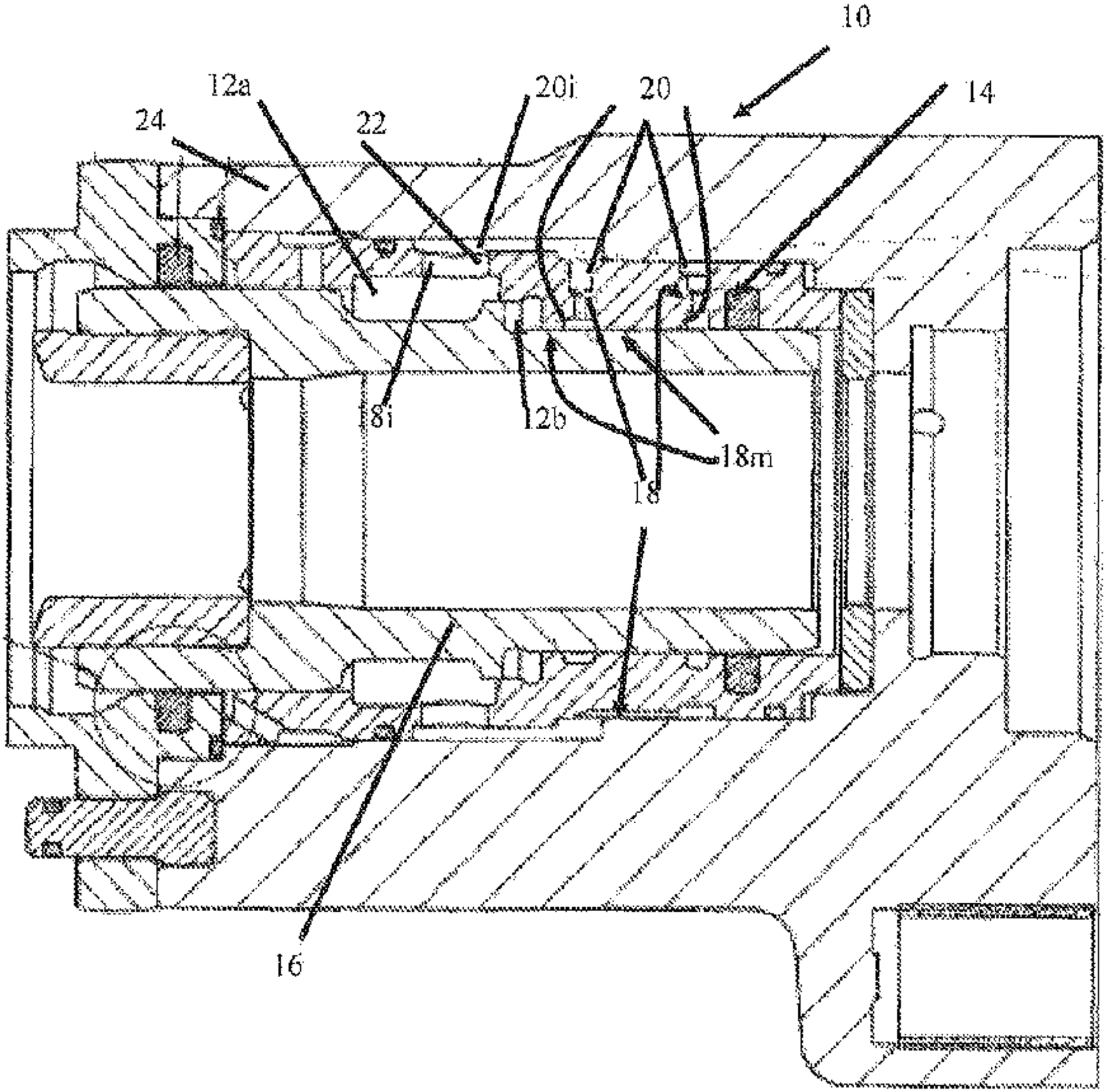
10
12a
20i
20
14
24
22
18i
12b
18m
18
16