US00D790349S

# (12) United States Design Patent

Loritz

(10) Patent No.: US D790,349 S
(45) Date of Patent: ** Jun. 27, 2017

(54) **TAMPER-EVIDENT CONTAINER**

(71) Applicant: **Ken Loritz**, Irvine, CA (US)

(72) Inventor: **Ken Loritz**, Irvine, CA (US)

(**) Term: **15 Years**

(21) Appl. No.: **29/527,658**

(22) Filed: **May 20, 2015**

**Related U.S. Application Data**

(63) Continuation of application No. 13/906,337, filed on May 30, 2013, now Pat. No. 9,061,812.

(51) **LOC (10) Cl.** ..... **09-05**

(52) **U.S. Cl.**
USPC ..... **D9/549**

(58) **Field of Classification Search**
USPC ..... D7/213, 602; D9/434–436, 438, 440, D9/443–445, 447, 449, 499, 518, 420, D9/549; 222/536; 215/228
CPC ..... B65D 50/046
See application file for complete search history.

(56) **References Cited**

U.S. PATENT DOCUMENTS


| | | | | |
|---|---|---|---|---|
| D125,152 | S * | 2/1941 | Hahn | 206/766 |
| D255,426 | S * | 6/1980 | Kaufman | D32/41 |
| D280,281 | S * | 8/1985 | Conti | D7/602 |
| D282,897 | S * | 3/1986 | Conti | D22/126 |
| D326,019 | S * | 5/1992 | Spangler | 401/289 |
| D356,259 | S * | 3/1995 | Hoyt | D8/14 |
| D368,856 | S * | 4/1996 | Peay | D9/447 |
| D445,335 | S * | 7/2001 | Hou | D9/436 |
| 6,375,377 | B1 * | 4/2002 | Lowery | B05C 17/10 401/183 |
| 6,439,409 | B1 * | 8/2002 | Dressel | B65D 50/046 215/209 |
| D540,169 | S * | 4/2007 | Tanner | D9/420 |
| D543,842 | S * | 6/2007 | Jackson | D9/420 |
| D555,490 | S * | 11/2007 | Liu | D9/549 |
| D598,738 | S * | 8/2009 | Supranowicz | D9/420 |
| D621,951 | S * | 8/2010 | Bucholtz | D24/224 |
| D644,739 | S * | 9/2011 | Belfance | D24/224 |
| D679,584 | S * | 4/2013 | Wada | D9/420 |
| D731,244 | S * | 6/2015 | Kohl | D7/510 |
| D747,649 | S * | 1/2016 | Phillips | D9/438 |
| D751,902 | S * | 3/2016 | Sturk | D9/447 |
| D777,028 | S * | 1/2017 | Chen | D9/420 |

OTHER PUBLICATIONS

Candy Warehouse. M&M's Minis Candy Tubes: 24-Piece Box. 2016 [earliest online date], [site visited May 9, 2016]. Available from Internet, <URL:http://www.candywarehouse.com/colors/assorted/products/mms-minis-candy-tubes-24-piece-box/>.*

* cited by examiner


*Primary Examiner* — Robert M Spear
*Assistant Examiner* — Darcey E Heflin
(74) *Attorney, Agent, or Firm* — Kafantaris Law Offices; Theo Kafantaris

(57) **CLAIM**

The ornamental design for a tamper-evident container, as shown and described.

**DESCRIPTION**

FIG. **1** is a front perspective view of a tamper-evident container showing my new design;
FIG. **2** is a rear perspective view thereof with the container cap partially opened;
FIG. **3** is a rear plan view thereof;
FIG. **4** is a left side elevational view thereof;
FIG. **5** is a top plan view thereof; and,
FIG. **6** is a bottom plan view thereof.

**1 Claim, 5 Drawing Sheets**

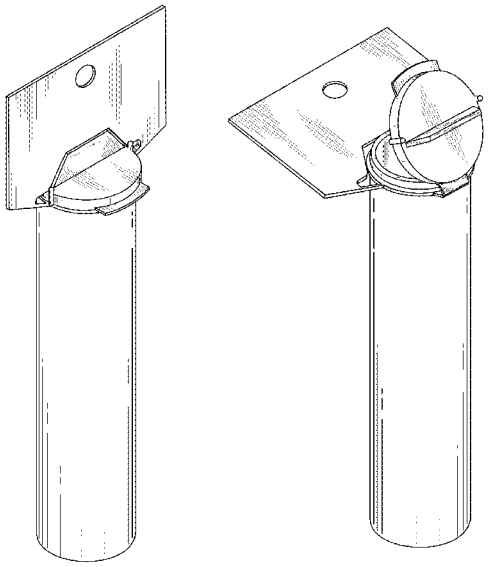

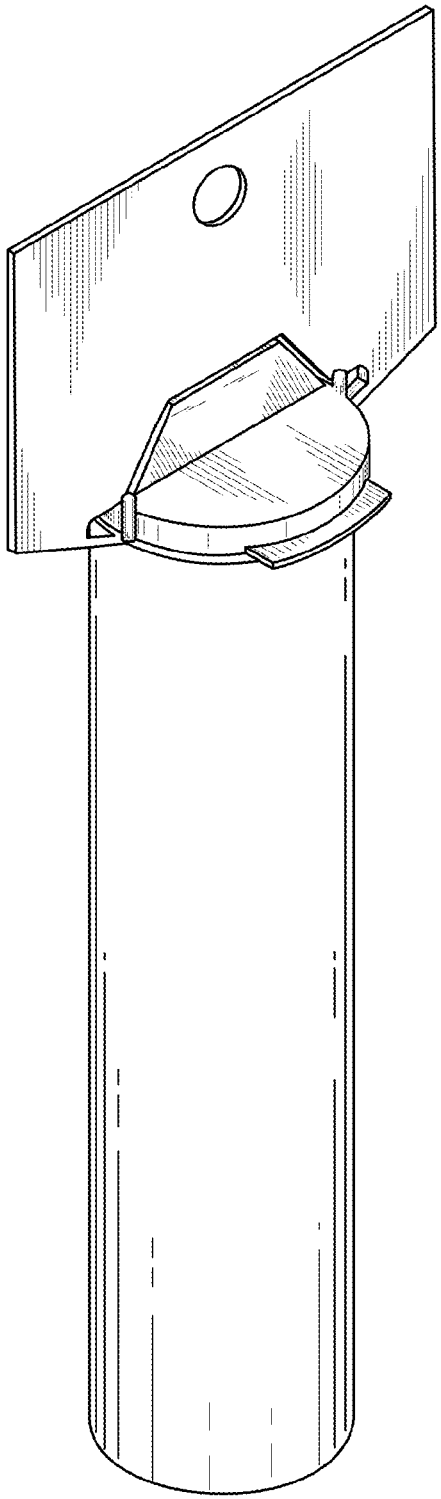

FIG. 1

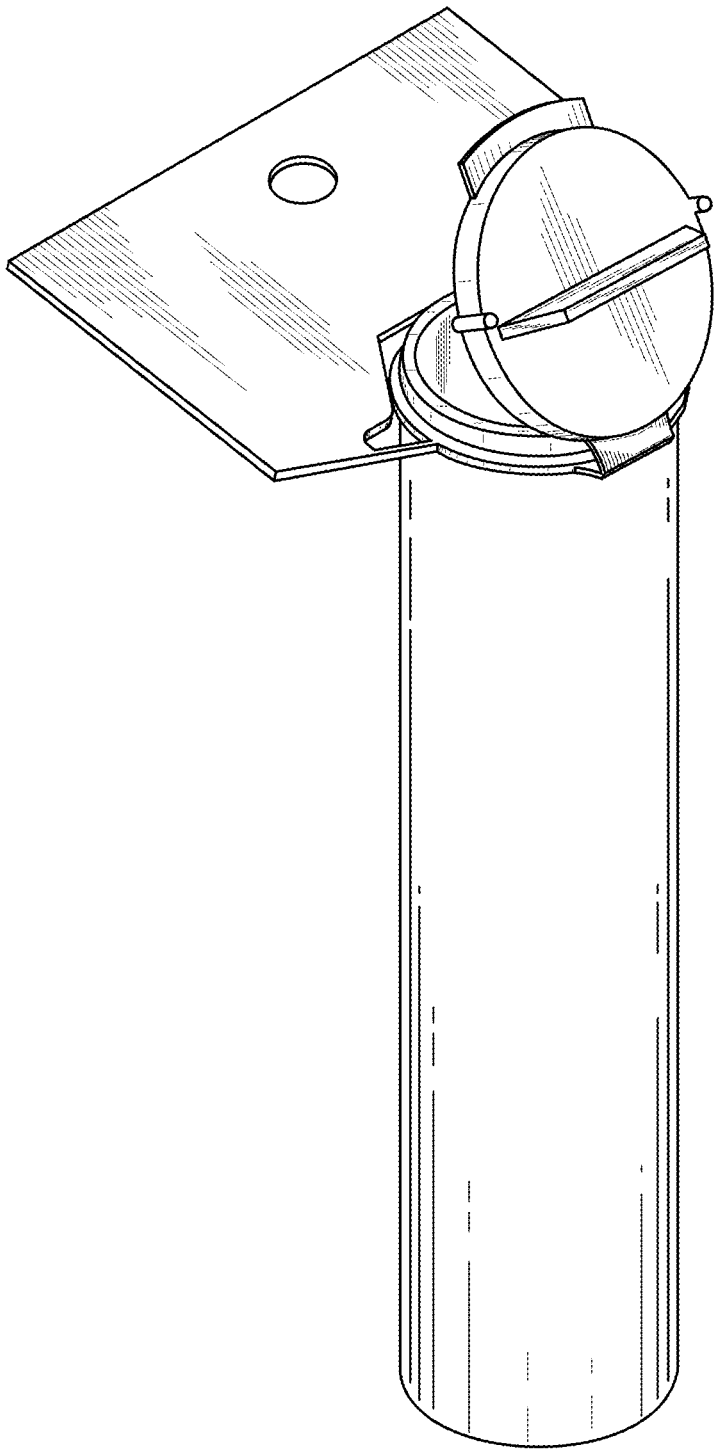

FIG. 2

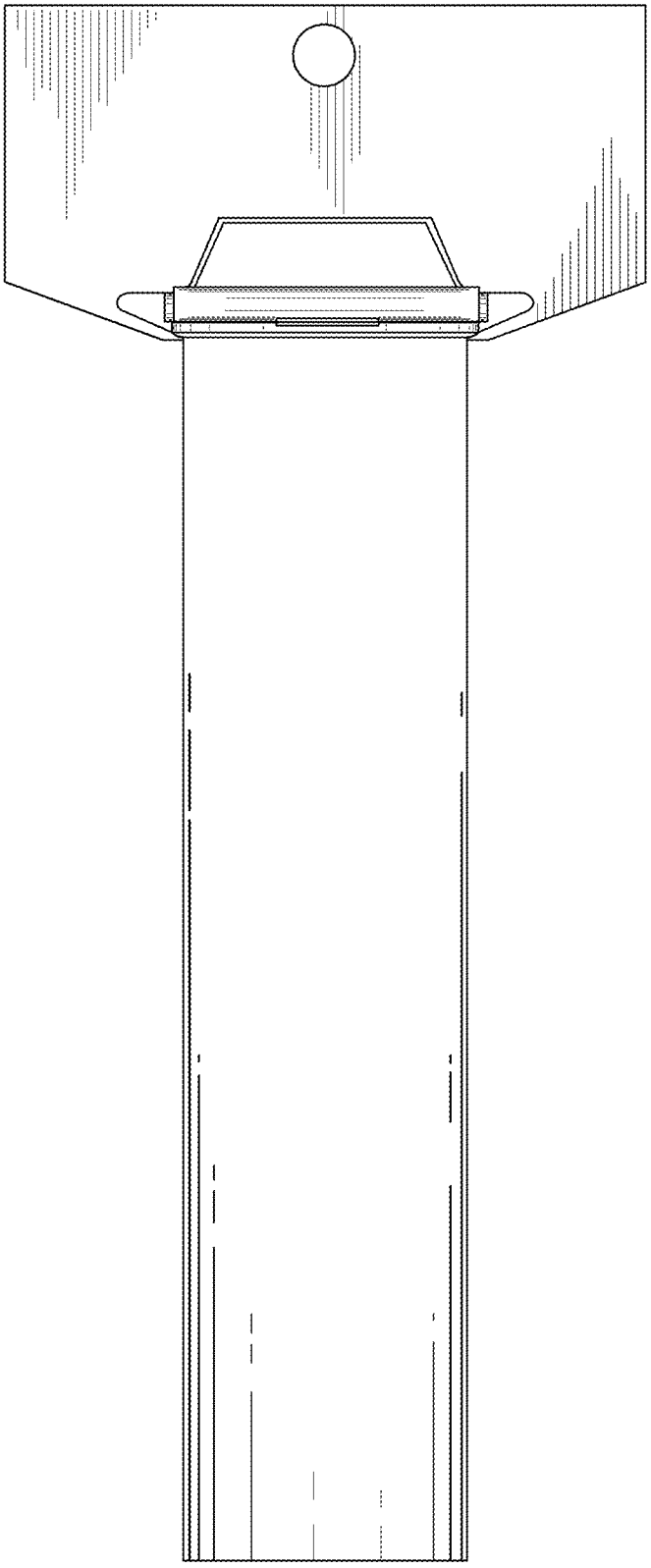

FIG. 3

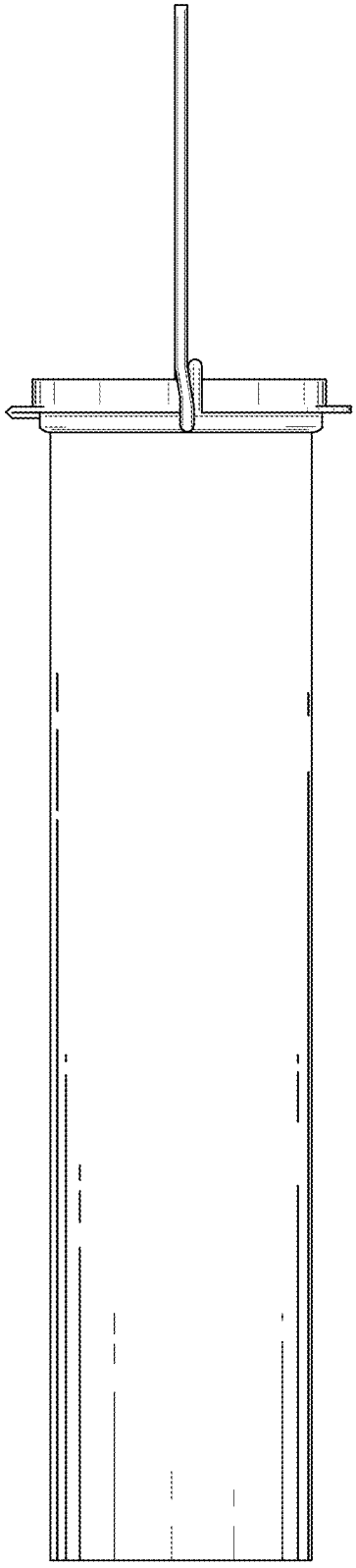

FIG. 4

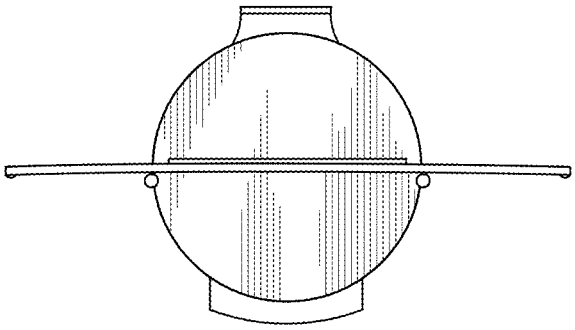

FIG. 5

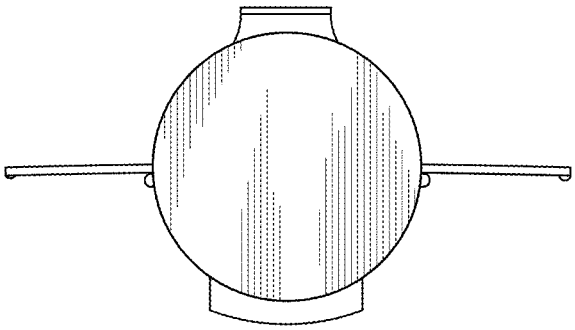

FIG. 6