W. L. DEMING.

ROTARY CLEANSER.

APPLICATION FILED MAY 20, 1916.

1,261,778.

Patented Apr. 9, 1918.

3 SHEETS—SHEET 1.

Fig. 2

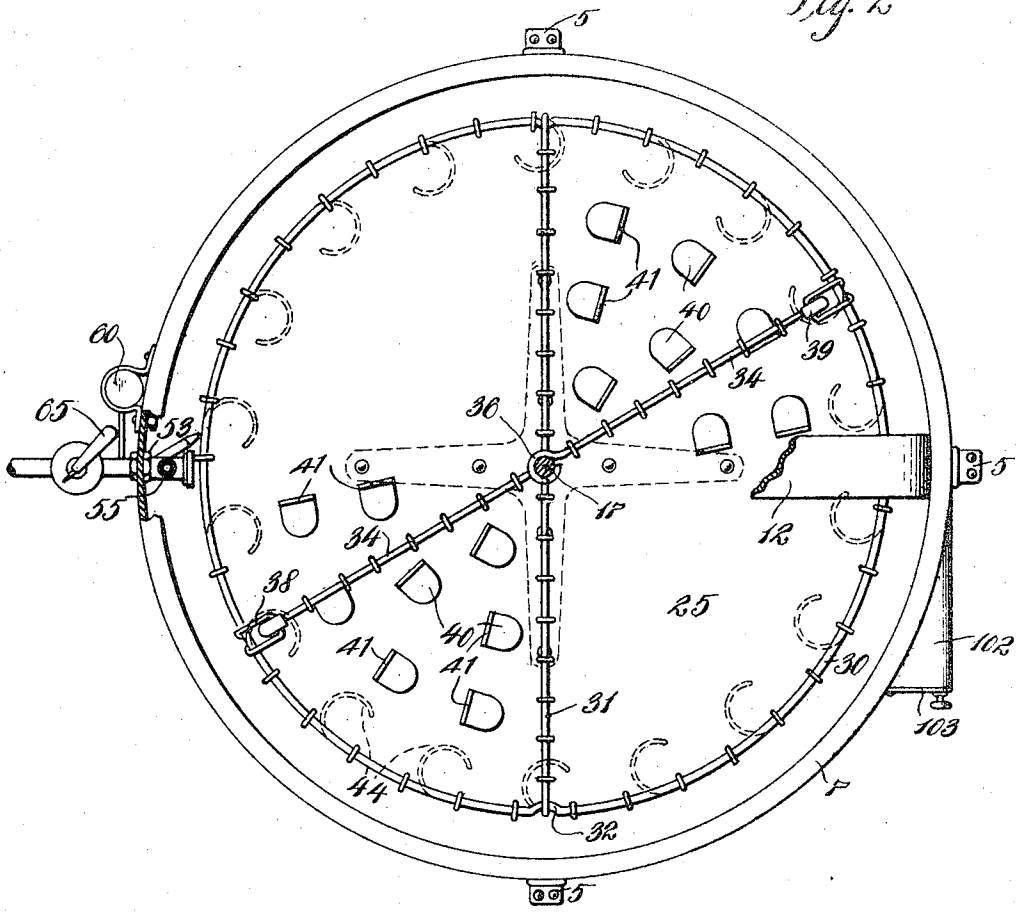

Fig. 1

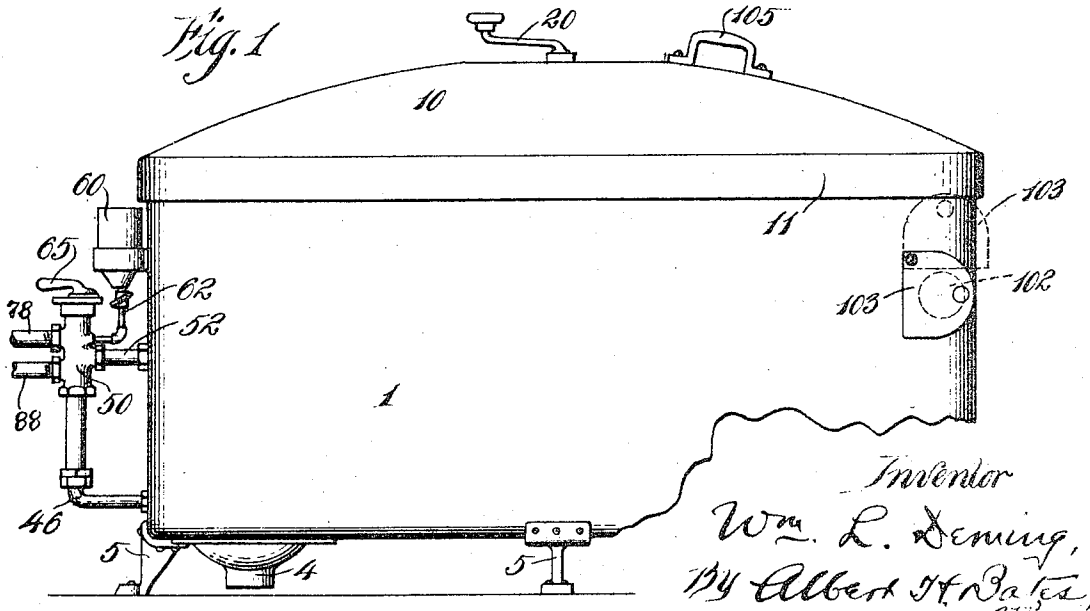

Inventor

Wm. L. Deming,

By Albert H. Bates,

Atty.

W. L. DEMING.

ROTARY CLEANSER.

APPLICATION FILED MAY 20, 1916.

1,261,778.

Patented Apr. 9, 1918.

3 SHEETS—SHEET 2.

Fig. 4

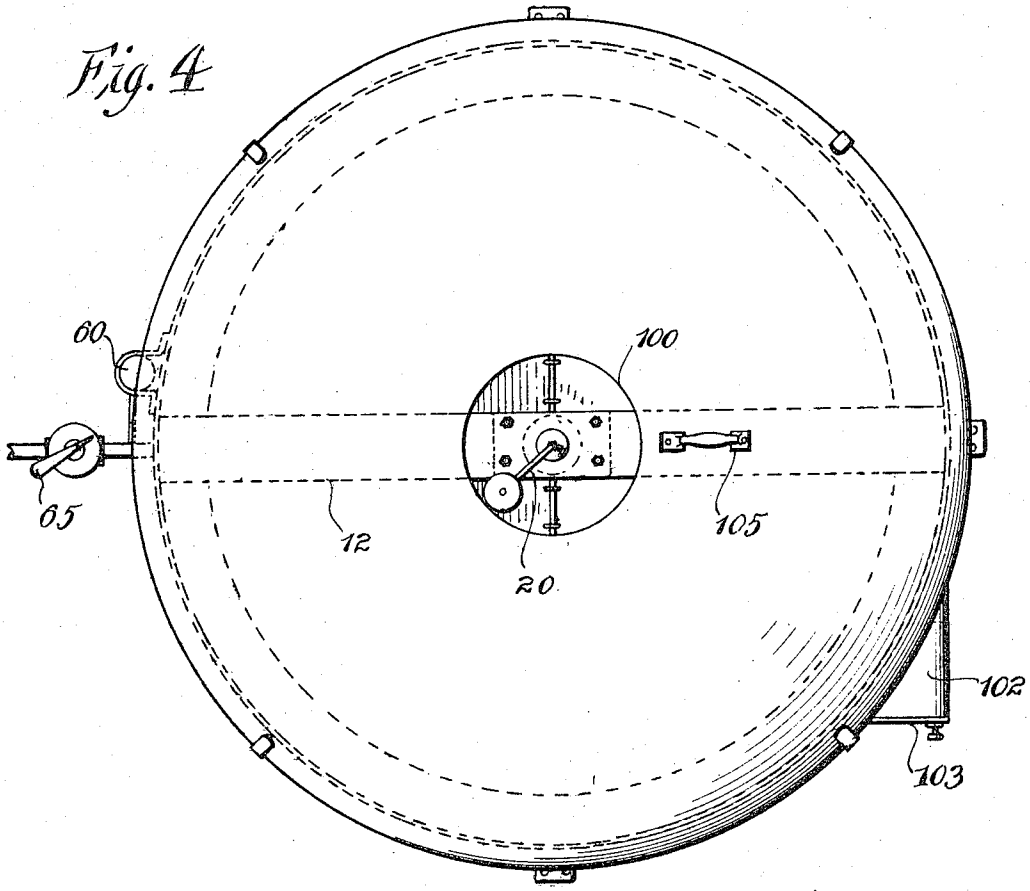

Fig. 3

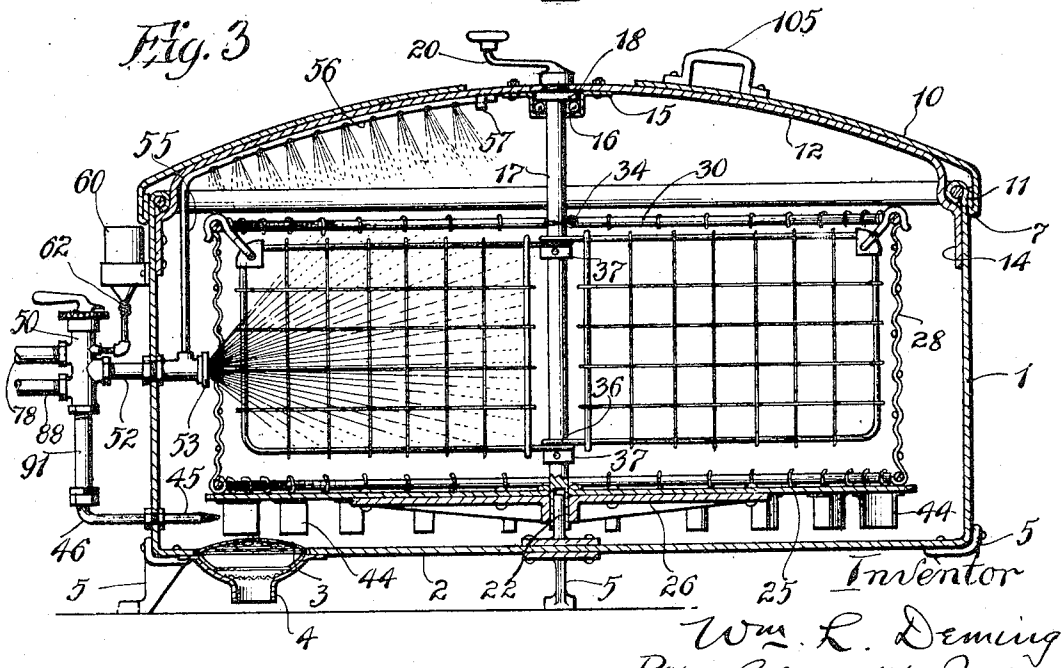

Inventor

Wm. L. Deming,

By Albert H. Baker,

Atty

W. L. DEMING.

ROTARY CLEANSER.

APPLICATION FILED MAY 20, 1916.

1,261,778.

Patented Apr. 9, 1918.

3 SHEETS—SHEET 3.

Fig. 5

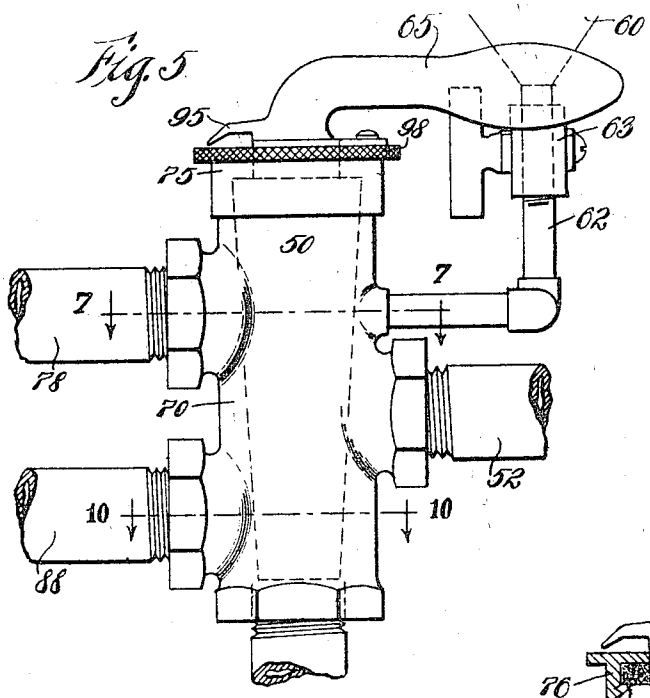

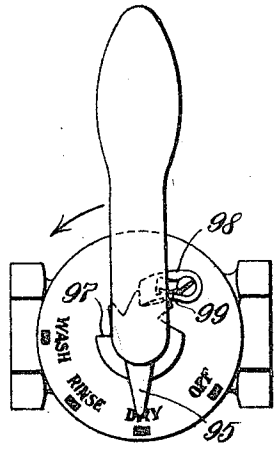

Fig. 11

Fig. 7

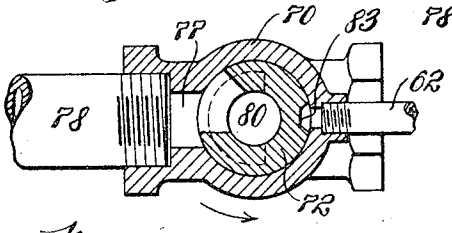

Fig. 8

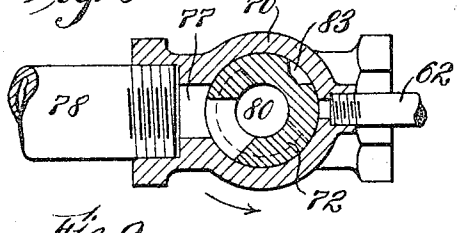

Fig. 9

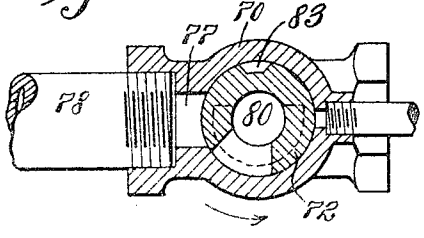

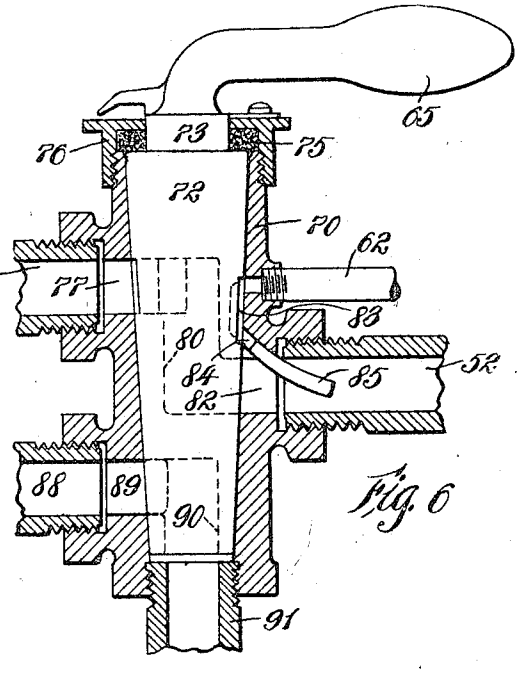

Fig. 6

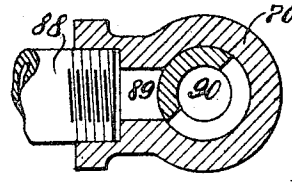

Fig. 10

Inventor.

Wm. L. Deming,

By Albert H. Bates,

Atty.

UNITED STATES PATENT OFFICE.

WILLIAM L. DEMING, OF SALEM, OHIO.

ROTARY CLEANSER.

1,261,778. Specification of Letters Patent. Patented Apr. 9, 1918.

Application filed May 20, 1916. Serial No. 98,967.

To all whom it may concern:

Be it known that I, WILLIAM L. DEMING, a citizen of the United States, residing at Salem, in the county of Columbiana and State of Ohio, have invented a certain new and useful Improvement in Rotary Cleansers, of which the following is a full, clear, and exact description, reference being had to the accompanying drawings.

This invention relates to a machine for washing such articles as dishes, cooking utensils, knives, forks, etc.

The general object of the invention is to provide such a machine which may be cheaply manufactured, simple in construction and very convenient to operate.

In carrying out my invention I provide a rotary receptacle for the articles to be cleansed, mounted within a stationary casing and having means whereby a stream of water may rotate the receptacle, and I also provide means for spraying cleansing liquid onto the articles to be cleaned while they are revolved in the receptacle. A more specific object of the invention is to so arrange the device that the dishes and other articles may be very conveniently placed in position in the receptacle so that it may be balanced and rotate evenly. A further object is to provide means controlling the cleansing water or other liquid and the water for rotating the receptacle, which, by operating a single member through a series of steps, may first wash the dishes with water and soap or other cleansing liquid, then rinse the same, while rotating the container, causing the air to dry the dishes after which the further movement of such member acts to discontinue the rotation.

My invention is hereinafter more fully described in connection with the drawings, and other objects will become apparent in such description. The essential characteristics are summarized in the claims.

In the drawings, Figure 1 is a side elevation of my rotary cleanser; Fig. 2 is a sectional plan of the same with the cover removed; Fig. 3 is a vertical transverse section; Fig. 4 is a plan of the same with the cover in position; Fig. 5 is a side elevation of the controlling valve; Fig. 6 is a vertical central section through the valve casing and passages leading thereto; Figs. 7, 8 and 9 are sections through the valve casing showing successive positions of the plug in the operation of the cleanser. These sections are taken substantially on the line 7—7 of Fig. 5; Fig. 10 is a similar section through the lower portion of the valve device, taken substantially on the line 10—10 of Fig. 5; and Fig. 11 is a plan of the controlling device.

Referring to the drawings by numerals, 1 indicates a substantially cylindrical casing shown as having a closed bottom 2, preferably slanting toward a draining opening, shown as fitted with a suitable screen 3 below which is a suitable waste passage 4. The casing 1 is shown as mounted on legs 5 which may be of any suitable construction. This casing is preferably made of light sheet metal, and has its upper edge curved inwardly over a reinforcing ring, as indicated at 7. Fitted over the upper edge of the casing 1 is preferably provided an upwardly curved or dome-shaped cover 10 having a downwardly extending flange portion 11 embracing the upper edge of the casing.

Extending transversely across the casing I have shown a bridge member 12 having its ends curved around the bead portion 7 and secured to the sides of the casing 1 at 14 by rivets or any suitable means. This bridge member carries a hollow ball bearing member 15 in which I provided an annular series of balls 16 adapted to engage the sides of a vertical shaft 17 and the under side of an annular flange or shoulder 18 rigid with the shaft. This shaft preferably extends upwardly through the bridge member and may be provided with any suitable knob or rotating means, for example I have shown a crank 20. The lower end of this shaft is guided by an upwardly extending projection 22 rigidly secured to the bottom 2 and fitting a corresponding bore in the lower end of the shaft 17. This shaft carries the receptacle for the articles to be cleansed, and it will be noted that the weight is entirely supported on the balls 16, the lower end of the shaft merely being positioned by the projection.

The receptacle for the dishes preferably comprises a substantially horizontal plate member 25 secured and supported by a spider 26 surrounding the lower end of the shaft 17 and rigid therewith. This plate 25, which is preferably of sheet metal, extends outwardly to a point adjacent but separate from the cylindrical walls 1 of the casing,

and rising from its periphery is a substantially cylindrical wall of woven wire, indicated at 28 and strengthened at its upper end by a ring 30. Thus the plate 25 and the wire wall 28 form, in effect, a basket rotatably mounted on the shaft 17. The ring 30 is preferably braced by a transverse rod 31 secured at its ends to offset portions 32 in the ring 30 and bound to the shaft 17 at its intermediate point. Depending from the transverse rod 31 are radially arranged vertical walls of open wire mesh dividing the basket into two compartments and forming walls against which articles to be cleansed may be rested or leaned. To provide for loading the two compartments of the basket receptacle with dishes so that the weight on opposite sides of the shaft may be substantially equal, I provide two radially arranged vertical walls 34 made of open wire weave and secured to a U-shaped wire having its opposite ends rotatably embracing the shaft 17, as indicated at 36. The loops around the shafts of the two movable walls rest one upon the other, and the lower loops rest upon suitable collars, indicated at 37. These walls may be swung about the shaft 17 and are secured in any desired position by hooks 38, shown as secured through clips 39 at the upper portion of the wall and adapted to extend over and embrace the ring 30.

In leaning the dishes against the wall 31, it is desirable to provide projections extending upwardly from the plate 25 against which the edges of the dishes may rest to prevent their displacement. This I accomplish by turning upwardly tongues 41 integral with the metal of the plate, thus leaving openings 40 through which water may drain while the dishes are being washed and rinsed. In placing the dishes in position it is desirable to begin by leaning them against the wall 31 and then one against the other at one side of the receptacle and then placing others at the opposite sides of the receptacle until the weight is substantially evenly divided. Then to prevent displacement of the dishes, the walls 34 are swung toward the dishes and secured in position by the hooks 38.

The rotation of the basket receptacle is accomplished by providing, on the lower side of the plate 25 adjacent its periphery, downward blades so faced that they may receive water in their concave side, projected from a nozzle 45 formed on the end of a tube 46 extending from the wall 1 and connected with a controlling valve indicated generally at 50 in Figs. 1 and 3.

As the water is projected from this nozzle substantially tangentially of the plate 25, it is turned backwardly on itself by the cups or blades 44 and results in using the force of the stream to rotate the receptacle.

Extending inwardly from another portion of the valve 50 is a tube 52, having on its inner end, a nozzle 53, standing substantially midway of the height of the wall 28 and adapted to project a cone-shaped spray inwardly against articles carried by the receptacle. Rising from the tube 52, adjacent the nozzle 53 is a pipe 55 which is curved inwardly and lies along the under side of the bridge 12 at 56, being secured by a suitable clip 57. The portion 56 of this tube is provided with a series of openings 58 on its under side adapted to project small streams downwardly to the articles in the receptacle. At 60 is indicated a container for liquid soap or the like from which a tube 62 leads to the controlling device 50 where such liquid may be mixed with the water projected from the nozzle 53 and tube 60, depending upon the position of the operating member 65 for the valve device 50.

This controlling device is adapted in preferred form to direct hot water and soap onto the articles in the receptacle first, while at the same time directing water to the projections underneath the receptacle whereby it is rotated, then shut off the soap directing hot water to the dishes while the receptacle rotates, and then close off the hot water while rotating only, whereby the dishes may be dried by such rotation. The form of this controlling device illustrated in the drawings, will now be described.

Referring to Figs. 5 to 11, 70 indicates a casing or body of the controlling valve 50, shown as provided with a vertical tapered opening into which is rotatably fitted a plug 72 having an upward extension 73 rigidly carrying the handle 65. Surrounding the extension is a ring of suitable packing material 75, inclosed in a cap member 76 threaded onto the upper end of the casing. Leading transversely toward the plug 72 is a hot water passage 77 to which water is led through a suitable pipe 78 threaded into the casing, as shown. Water flowing through the passage 77 enters a sector-shaped opening communicating with an axial passage 80, leading downwardly to an exit passage 82 through which water may flow to the pipe 52 and nozzle 53. This pipe 78, I prefer to use for hot water.

In the side of the body 70, opposite the pipe 78, is a small pipe 62 leading from the liquid soap receptacle 60 under the control of a cock 63. This pipe communicates with a short passage adapted to register with a groove 83 formed in the surface of the plug 70 and extending downwardly to a short passage 84 communicating with the exit passage for the hot water. To cause the soap to be drawn downwardly through these passages, I provide a short curved tube 85 having a contracted end opening toward the direction in which the water is flowing and

having its upper end fitting into the passage 84 and the passage at the end of the pipe 62, the valve is in a position to permit water to flow through the hot water passages thereby causing the mixing of the soap with the hot water.

Beneath the pipe 78 is shown a similar pipe 88 communicating with a passage 89 leading to the plug 70 and adapted to register with a sector-shaped opening in the plug which communicates with an axial bore 90 leading downwardly to an opening in the lower end of the stem 70 which receives the threaded end of a pipe 91 leading to the pipe 46 which as heretofore stated, leads water to the nozzle for rotating the basket receptacle.

The operation of this valve controlling device is as follows: With the handle 65 in the position shown in Figs. 5 and 6, the plug presents surfaces closing the passages 77, 83 and 89, and on turning the valve in the direction of the arrow in Figs. 7 to 9 and 11, a short distance, for example, one-eighth of a turn, the sector-shaped openings of the passages 80 and 90 are brought opposite the passages 77 and 89 respectively, thus allowing hot water to pass through the pipe 78 through the plug and pipe 52 to the interior of the casing where it is forcibly thrown against the dishes. This first movement also brings the groove 83 into position to allow soap to pass downwardly from the tube 62 to the short tube 85 and mix with the water thrown against the articles to be cleaned. With the valve in this same position the sector-shaped opening of the passage 90 registers with the opening 89, thus allowing water (preferably cold) to pass through the pipe 88, passage 90 and pipe 91 to the nozzle 45, where it is thrown against the blades 44 on the under side of the receptacle, thereby acting to rotate this receptacle, while the hot water mixed with soap, or other cleansing fluid, is thrown against the articles to be cleaned and these articles are revolved within the casing presenting all surfaces to the streams of water thrown onto the same. The cleaning water passes outwardly through the open sides of the basket and downwardly through the openings 41 and is drained off through the draining opening in the bottom of the casing.

The above operation is continued long enough to thoroughly cleanse the dishes and they may be rinsed by turning the handle 65 another step in the same direction, thus bringing the groove 83 out of registration with the passages for the soap thereby closing the same while the sector-shaped openings for the hot and cold water still remain in registration with the corresponding passages, thus hot water is thrown upon the dishes which still continue to revolve. The position of the plug under the two conditions described, is shown in the sections in Figs. 7 and 8. It will be noted that in the first (Fig. 7) the groove 83 is in registration with the soap passages and in Fig. 8 it is brought out of registration while the hot water passage still remains in communication.

A still further movement of the handle brings the sector-shaped opening for the hot water passage out of registration with the passage 77 and also the passage 82 thereby stopping the flow of hot water (this position is indicated in Fig. 9) but the opening for the cold water, extending through more degrees of the surface of the plug, may still remain in registration with the passage 89, thus the cold water may continue to revolve the receptacle drying the dishes by the tendency of centrifugal force to throw the water off as well as causing air to pass rapidly over the same. A still further movement of the handle may close the cold water passage, as shown in the section in Fig. 10, thus completing the operation and leaving the valve entirely closed.

At 95 is shown an indicator which may stand over suitable marks on the top of the cap 75, labeled to indicate the operation being performed when a valve is in a certain position, for example, in Fig. 11, the indicator stands over a mark labeled "dry," meaning that the cold water only is passing through the valve which is acting to rotate the receptacle causing the dishes to be dried, as above described.

To prevent the operations taking place in reverse order or out of order by inadvertently turning the handle in the wrong direction I may provide notches 97 in the shank 73 of the plug and which may be engaged by a pawl 98 pivoted to the top of the cap and actuated by a spring 99. These notches are preferably so arranged that each notch may correspond to an operation so that it is not necessary to observe closely the position of the indicator, but to perform the complete operation, one need only move the handle so that each notch is successively engaged by the pawl. The click of the pawl indicates the handle has been brought to proper position for the next operation. In the particular form of valve shown, the movement of the handle required for the several operations is materially less than the entire revolution, but the pawl prevents the handle passing in the wrong direction and the surfaces are so arranged that the valve remains closed from the time it is first shut off until it is brought around to the first operating position.

Economy of cold water may be effected by rotating the receptacle manually by means of the crank 20 and this handle is also useful in connection with the motor. The starting of the rotation may be hastened by the use of the crank. This may sometimes be

necessary when the receptacle is heavily loaded. In the top of the cover is indicated an opening 100 of a size adapted to pass freely over the crank irrespective of its position. This opening may permit the circulation of air over the dishes during the drying operation. Air entering through this opening may pass outwardly through a tangentially arranged passage 102 shown as closed by a pivoted cover 103 extending across the open end of this passage. It will be seen that as the dishes within the receptacle are being rotated after the hot water is shut off air will be caused to circulate rapidly and will enter through the opening 100 and be forced outwardly something after the manner of a blower through the opening 102 when the cover 103 is raised, as indicated in Fig. 1. Thus a very free circulation of the air is permitted over the dishes which, being heated by the hot water, tend to dry very quickly.

After the dishes are completely dried, as described by the above operation, the cover 10 may be removed, a suitable handle being provided at 105, thus allowing free access to the interior for removal of the articles.

Having thus described my invention, what I claim is:

1. In a device of the character described, the combination of a casing having an open top and bottom closed except for a draining opening, a removable cover fitting over the top of the casing, a transverse bridge member extending across the top of the casing beneath the cover, a rotary container supported by said bridge member, means above the cover for manually rotating the container, the cover having a central opening larger than said means, a motor below the container for rotating the same, and means for discharging water into the container.

2. In a device of the character described, the combination of a casing having an open top, a removable cover adapted to close the top and having an opening therein, a rotary container carried in said casing, a water motor for rotating the container, an opening on the wall of the casing, means for preventing water splashing out of the casing, said casing being adapted to be opened to permit air to flow downwardly through the cover over the articles and thence outwardly through the opening in the wall of the casing.

3. In a device of the character described, a casing having a bottom closed except for a draining opening and having an open top, a removable cover adapted to close the top and having an opening therein, a transverse support extending across the top of the casing, a rotary container carried by said support, means for forcibly directing water against articles in the container, a water motor for rotating the container, independently of the water directed against the articles, there being an orifice on the wall of the casing, and means for opening and closing said orifice.

4. In a device of the character described, the combination of a casing, a rotary container within the casing, a water motor for rotating the container, means for directing water against articles within the container while being revolved, a passage for hot water and a separate passage for water, valve means for controlling hot water directed against the articles and simultaneously directing water to the motor and adapted in another position to close the hot water passage while allowing the motor to rotate, and to thereafter close the passage to the motor.

5. In a device of the character described, the combination of a rotary container for miscellaneous articles, a motor for rotating said container, a passage for forcibly directing hot water against the articles within the container, valve means controlling said passage, means directing liquid detergent into the hot water and mixing it therewith, said valve means adapted in different positions to direct hot water and liquid detergent to the articles and water to the motor, then to direct hot water only to the articles and water to the motor, then to close the hot water passage leaving the water passage only to the motor open allowing the articles to be dried by the action of centrifugal force and air, then in another position to close all of said passages.

6. In a device of the character described, the combination of a rotary container, a water motor for rotating said container, a nozzle for forcibly directing hot water against articles within the container, a hot water passage leading to said nozzle, a passage leading to the water motor, a valve controlling said passages, means for operating said valve and adapted in different positions to direct hot water to the articles and water to the motor, then to close the hot water passage leaving the water passage to the motor open, then in another position to close all of said passages, and means for preventing the rotation of said valve in the opposite direction.

7. In a device of the character described, the combination of a casing, a rotary container for miscellaneous articles within the casing, a nozzle for forcibly directing hot water against articles in the container, a passage leading to said nozzle, a valve controlling said passage, a passage for liquid detergent leading to said valve, means for operating the valve, said valve being so constructed that it may first direct hot water and liquid detergent against the articles and then shut off the liquid detergent directing only hot water, means for

preventing the operation of the controlling means in a direction that would reverse the order of these operations.

8. In a device of the character described, the combination of a container, a side nozzle and a perforated tube for forcibly directing hot water laterally and downwardly against articles within the container, a hot water passage leading to said nozzle and tube, a passage for liquid detergent, valve means controlling said passages, means directing the liquid detergent into the hot water, means for operating said valve means and adapted in different positions to direct hot water and liquid detergent to the articles, then direct hot water only to the articles, then in another position to close each of said passages.

9. In a device of the character described, the combination of a substantially closed casing, a rotary container within the casing having a reticulated wall, a series of blades projecting downwardly from the bottom of the container, means for simultaneously directing motive water forcibly against said blades and cleansing water through the wall of the container against articles carried therein, and a single valve adapted in one position to turn on both the motive and cleansing water, and in another position to turn on the motive water without the cleansing water, and openings in the casing for enabling circulation of air during the last mentioned operation.

10. In a device of the character described, the combination of a casing, a rotary container within the casing, a water motor for rotating the container, means for directing cleansing water against articles within the container while being revolved, and a single valve adapted in one position to open the passageways for both the cleansing water and for the motor water and in another position to open the passageway for the motor water only.

11. In a device of the character described, the combination of a stationary casing, an upright shaft mounted in the casing, a basket-like container carried on the upright shaft and rotatable about the axis thereof, a movable radial partition within the container, and means for rotating the container.

12. In a device of the character described, the combination of a stationary casing, an upright shaft mounted in the casing, a round basket-like container carried on the upright shaft, a diametric partition within the container rigid therewith, and a radial partition on each side of said diametric partition and movable about the axis of said shaft.

WILLIAM L. DEMING.