(No Model.) 4 Sheets—Sheet 1.

F. E. HERDMAN.

REGULATING ADMISSION OF CURRENTS TO MOTORS.

No. 587,311. Patented Aug. 3, 1897.

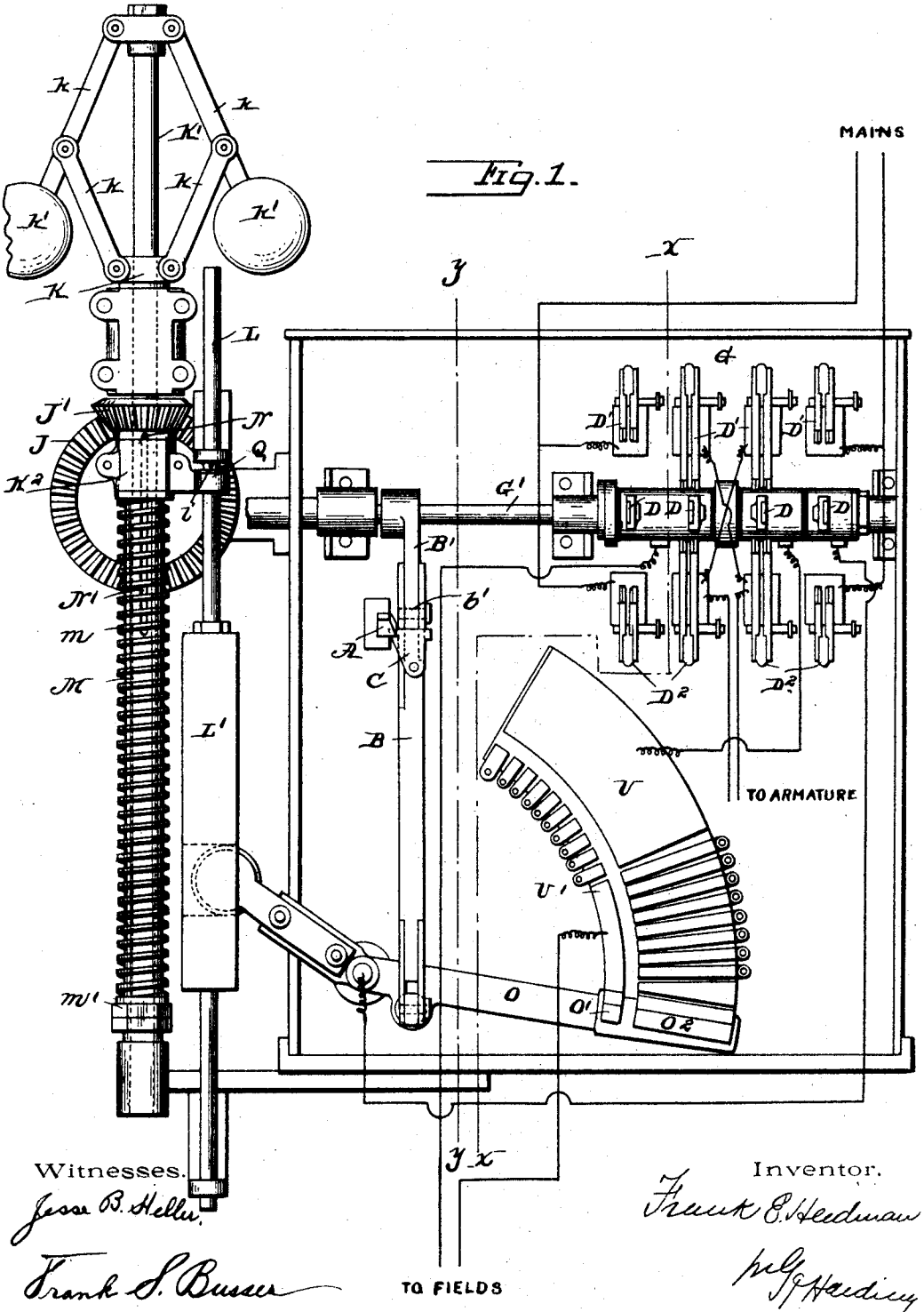

Fig. 1.

Witnesses.
Jesse B. Heller.
Frank S. Busser

Inventor.
Frank E. Herdman
by G. Harding
Attorney.

THE NORRIS PETERS CO., PHOTO-LITHO., WASHINGTON, D. C.

(No Model.)

4 Sheets—Sheet 2.

F. E. HERDMAN.

REGULATING ADMISSION OF CURRENTS TO MOTORS.

No. 587,311. Patented Aug. 3, 1897.

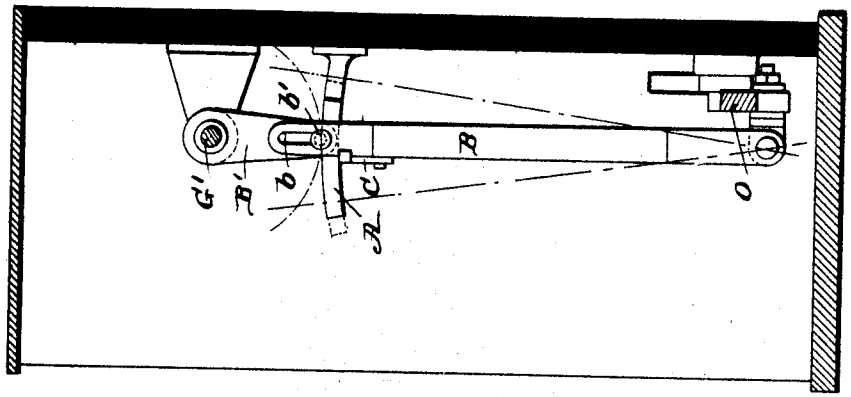

Fig. 3.

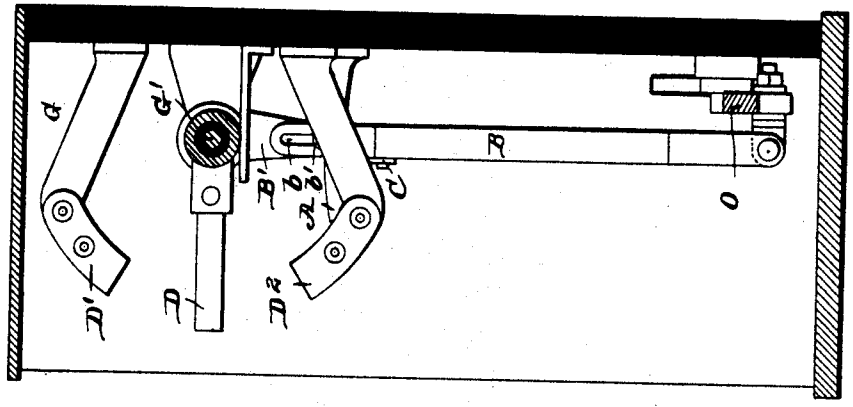

Fig. 2.

Witnesses.

Jesse B. Heller,

Frank S. Busser

Inventor.

Frank E. Herdman

per C. J. Harding

Attorney.

THE NORRIS PETERS CO., PHOTO-LITHO., WASHINGTON, D. C.

(No Model.) 4 Sheets—Sheet 3.

F. E. HERDMAN.

REGULATING ADMISSION OF CURRENTS TO MOTORS.

No. 587,311. Patented Aug. 3, 1897.

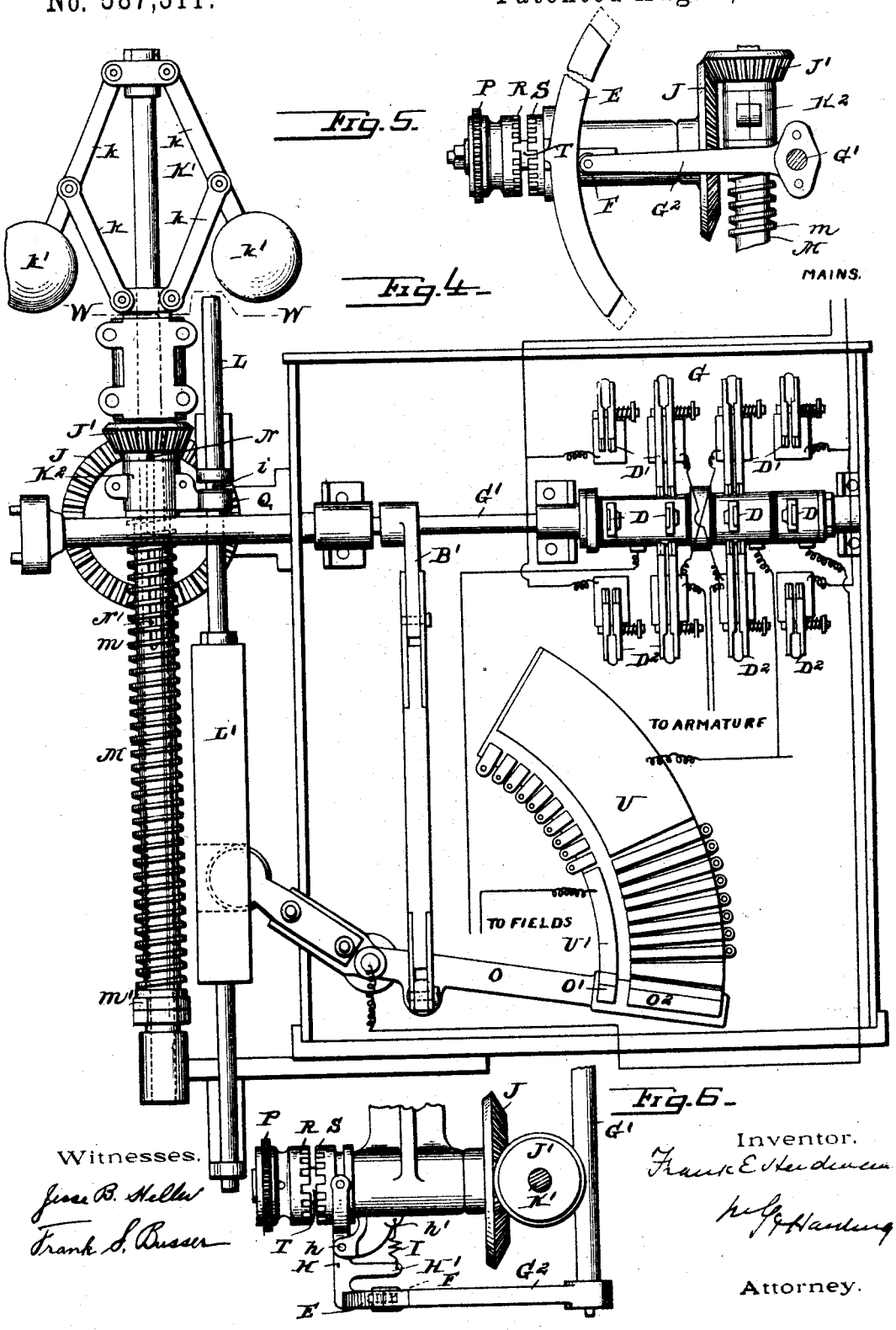

Witnesses.
Jesse B. Heller
Frank S. Busser

Inventor.
Frank E. Herdman
per G. H. Harding
Attorney.

THE NORRIS PETERS CO., PHOTO-LITHO., WASHINGTON, D. C.

(No Model.) 4 Sheets—Sheet 4.

F. E. HERDMAN.

REGULATING ADMISSION OF CURRENTS TO MOTORS.

No. 587,311. Patented Aug. 3, 1897.

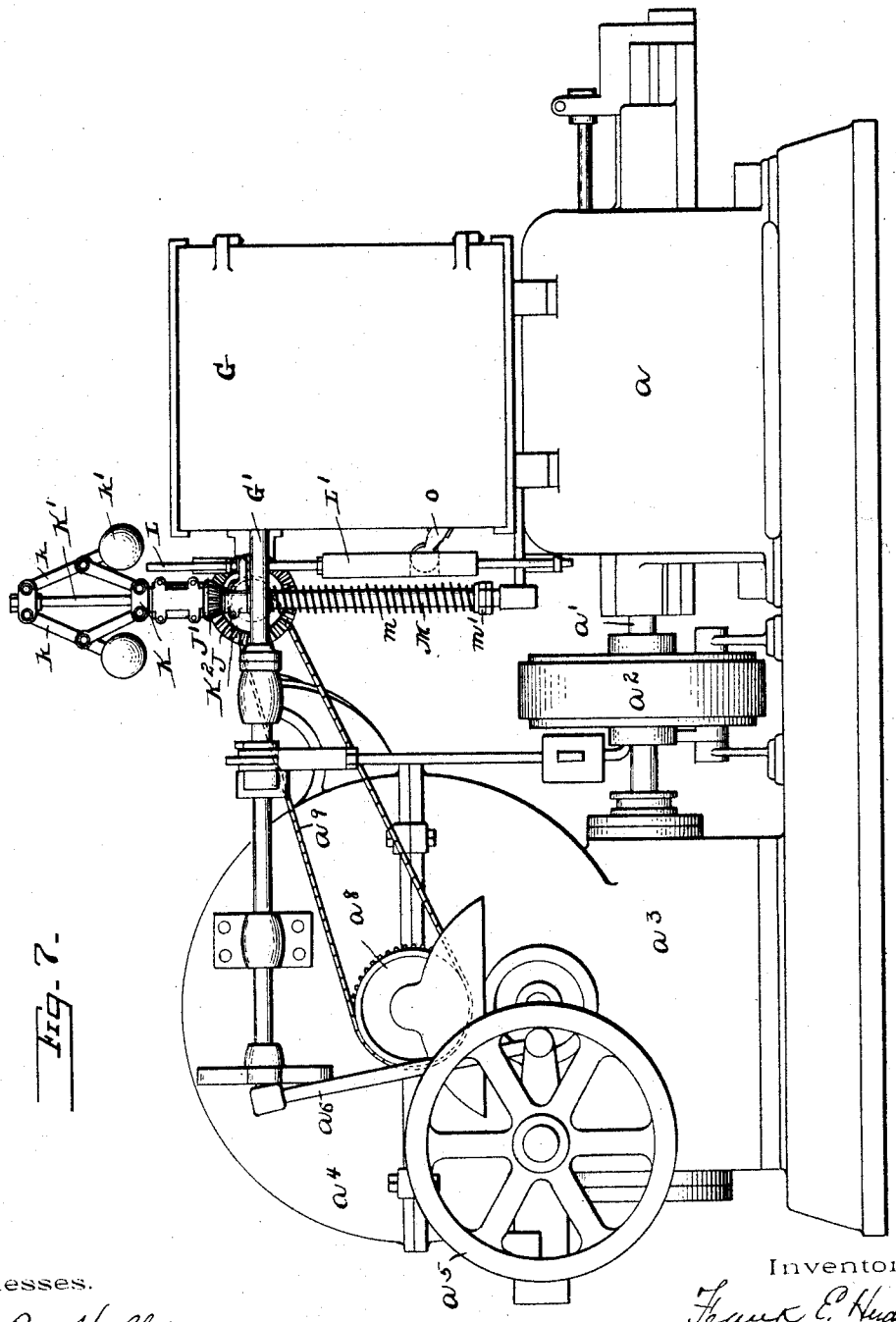

Fig. 7.

Witnesses.
Jesse B. Keller.
Frank S. Bussey

Inventor.
Frank E. Herdman
by J. H. Harding
Attorney.

THE NORRIS PETERS CO., PHOTO-LITHO., WASHINGTON, D. C.

UNITED STATES PATENT OFFICE.

FRANK E. HERDMAN, OF WINNETKA, ILLINOIS.

REGULATING ADMISSION OF CURRENTS TO MOTORS.

SPECIFICATION forming part of Letters Patent No. 587,311, dated August 3, 1897.

Application filed November 27, 1896. Serial No. 613,490. (No model.)

To all whom it may concern:

Be it known that I, FRANK E. HERDMAN, a citizen of the United States, residing at Winnetka, county of Cook, and State of Illinois, have invented a new and useful Improvement in Regulating Admission of Currents to Motors, of which the following is a full, clear, and exact description, reference being had to the accompanying drawings, which form a part of this specification.

My invention has for its object, generally speaking, to regulate the resistance in circuit and strength of current according to the speed of the motor, and is more specifically designed as an improvement upon the invention described and claimed in a patent issued to me September 15, 1896, No. 567,714.

In the drawings, Figure 1 is a front elevation of the switch-box and current-regulating devices. Fig. 2 is a section on line x x of Fig. 1. Fig. 3 is a section on line y y of Fig. 1. Fig. 4 is a view similar to Fig. 1, showing modified form of current-regulating devices. Fig. 5 is a side elevation of a portion of the current-regulating devices shown in Fig. 4. Fig. 6 is a partial section on line w w of Fig. 4. Fig. 7 is a side elevation showing the connection between the current-regulating devices and the motor and switch-controller.

The invention of said patent consists of a centrifugal governor driven by the motor, which is adapted to operate a device for increasing the current in the armature or decreasing the current in the field, or both, to an extent proportionate to the speed of the motor. The governor regulated the movement of the device in one direction, while independent means were provided for moving the device in the other direction.

The principal features of the invention of this patent are shown in the drawings, wherein—

a is the motor, having the shaft a' and the brake-wheel a^2.

a^3 is the worm-casing, having the worm on the shaft a', which drives the drum a^4.

a^5 is the operating-sheave, connected by link a^6 with the operating-bar G'.

G is the snap-switch, operated by turning the operating-bar, for admitting current to the motor.

a^8 is a sprocket-wheel on the drum-shaft, and a^9 a sprocket-chain engaging a sprocket-wheel on a shaft having the bevel-gear J. This bevel-gear meshes with the bevel-gear J', to which is fixed the collar K of the governor. The shaft K' slides within this collar and gear. Secured by links k to the shaft and collar K are governor-balls k'. When the balls of the governor fly out, said shaft is moved downward. Upon this shaft is the collar K^2, moving up and down the shaft.

Q is a projection from the collar K^2, loosely surrounding the rod L, having the weight L'. On this rod is the pin l, resting on the projection Q. On the outside of the shaft K' is a sleeve M, secured to the hub of the wheel J' and extending downward and surrounded by the spring m, which spring rests at its lower end against the nut or projection m'. The sleeve M, being fastened to the hub of the wheel J', causes the spring at its lower end to be held from moving upward or downward. The shaft K' moves inside of the sleeve M, so the sleeve revolves with it. The block carrying the collar K^2 rests on spring m.

N is a pin secured to the shaft K', which pin passes through a slot N' in the sleeve M, so that the revolution of the sleeve by the bevel-gear J revolves the shaft, but the shaft can move up and down independent of the nut against the spring m. By this arrangement the spring can be placed to oppose the movement of the centrifugal governor, thereby giving means of regulation. The nuts m' are on the tube and permit of the adjustment of the tension of the springs m. In this case I use a single rheostat-arm O, controlling the brushes O' and O^2, respectively, of the field and armature resistances. When the balls of the governor fly out, the collar K^2 moves downward, allowing the rod L to drop by means of weight L', moving the arm O over the resistances, and when the balls move inward the arm O moves in the other direction.

In the drawings of the patent hereinbefore referred to a connection between the operating-bar and the rheostat-arm O was shown, which, when the operating-bar was moved from the center to operate the snap-switch to admit current, permitted the rheostat arm to move over the resistances to the extent that the governor and its attachments permitted the weight L' to move the arm. I have

not shown herein this connection, as I have substituted for it the preferred form of my improvement; nor have I considered it necessary to describe the switch and the electrical connection between it and the motor and resistances, as this feature of the machine to which I have applied my invention has been fully described in the patent hereinbefore referred to and forms no part of the present invention. It is only necessary to state that current from the switch passes through the armature and field resistances, the armature-resistance contacts being represented by the letter U and the field-resistance contacts by U′, and that turning the switch in either direction from its center closes the circuits to the armature and field of the motor, and that turning the switch from one direction to the other reverses the motor. As the motor attains its speed the governor-balls revolve and permit the arm O to move over the resistances and cut out the resistances in the armature and throw in the resistances in the field-circuit to an extent proportioned to the speed of the motor and the rapidity with which it attains that speed.

While the arrangement which I have described is operative and accomplishes the object for which it was designed, certain objections to it have arisen which my present invention is designed to remedy. For instance, if the operating-bar was brought sufficiently toward its central position to break the circuit to the motor and was then immediately thrown back, so as to again close the circuit before the motor had come to rest, the speed of the governor would be such as to keep the arm over the resistance-contacts a certain distance, possibly a sufficient distance to cut out the armature resistance. The motor under these conditions would receive nearly the full force of the current. Unless the motor would pick up quickly a fuse would be blown, and if it did so pick up it would be with a very heavy inflow of current. A similar result would certainly take place if the current were as suddenly reversed before the brake acted to bring the machine to rest. The rheostat-arm would be held in such a position by the still revolving governor that a large inflow of current would take place in the opposite direction, which would, without question, blow a fuse. To obviate these difficulties, I have shown two devices. The first consists of a new form of connection between the operating-bar and the resistance-arm.

A quadrant A is attached to the slate and projects therefrom alongside of a lever or link B, which is pivoted to the rheostat-arm and has at its upper end the slot *b*. A lever B′, keyed to the operating-bar, has at its lower end a pin *b*′, which normally rests in the bottom of the slot. On this link B, a short distance below the slot, (and when the link is in its central position just below the quadrant,) is a latch C. The quadrant is narrower at the top than at the bottom, the side adjacent to the link being inclined. When the operating-bar is thrown to the right or left for closing the circuit through the motor in one direction or the other, the link B, by means of the slot-and-pin connection, is thrown to the right or left. The latch C travels along the under edge of the quadrant A, but owing to the engagement of the latch with the quadrant the link B and arm O are locked from moving upward. The quadrant is of such length that the latch will not pass from under either end of it until the operating-bar has been thrown sufficiently to close the blades D with the contacts D′ D′ D′ D′ or D^2 D^2 D^2 D^2 of the snap-switch. When this occurs, the link B is no longer locked from moving upwardly, as the latch has cleared the quadrant and the weight L′ is free to carry the resistance-arm O over the contacts. At the instant the latch C has cleared the quadrant the pin *b*′ rests in the upper end of the slot *b*, and as link B moves upwardly, due to the upward travel of arm O, the pin, relatively speaking, will travel downward in the slot. If now the snap-switch is brought to its center and then suddenly thrown open again, either in the same direction or to reverse, the operation of the device will be as follows: In throwing the operating-bar to the center the link B and arm O will be brought to the center, due to the engagement of the pin with the bottom of the slot, the latch C sliding over the inclined face of the quadrant A and dropping in beneath the quadrant, so as to lock the link and rheostat-arm in their central positions. In this position the rheostat-arm is locked from passing over the contacts, even though the governor has a speed. As the operating-bar and switch are manipulated to again close the circuit in either direction through the motor the rheostat-arm is locked from moving over the contacts, by means of the engagement of latch C with quadrant A, until the operating-bar has been thrown sufficiently to close the snap-switch, as just described. Such being the case, the resistances cannot be cut out of the circuit, due to the speed of the motor and governor, until the snap-switch has closed the circuit through the motor. With this arrangement, therefore, the motor necessarily will have the full resistance in the circuit when the circuit is first closed through it.

The quadrant may be somewhat longer, as shown in dotted lines, than I have described it—that is, it may be of such length that the snap-switch will be closed shortly before the latch C passes from under the quadrant. For instance, it may be desirable in the application of my improvement to electrically-operated elevators to run the car two or three inches, so as to make a more accurate stop. It is better under these circumstances that no armature resistances at all be cut out of the circuit. If the quadrant is made of the length which I have just mentioned, the operating-bar may be thrown just far enough to close

the snap-switch, but not so far as to free the latch C. In this position of the operating-bar current is admitted to the motor, but the rheostat-arm is held so as to retain the entire resistance in the armature-circuit, thereby allowing the operator to run these few inches without the very quick manipulation of the control-lever and operating-bar that would be necessary in case the latch was released at the instant the snap-switch closed.

I have shown in Figs. 4, 5, and 6 a modified form of my invention. The connection between rheostat-arm O and the operating bar or shaft is the same as that hereinbefore described, minus the quadrant and latch. Upon the shaft T, carrying the bevel-gear J, which drives the bevel-gear J′ and governor-shaft K′, is a sprocket-wheel P, which is connected by means of a sprocket-chain (not shown) with the motor-shaft or with mechanism driven by the motor-shaft. This sprocket-wheel is loose upon its shaft and carries one jaw R of a clutch. The other jaw S of the clutch is feathered to the shaft which drives the governor. This jaw member has a circumferential groove, within which rests a pin on the end of a lever H. This lever is pivoted at h to a bracket h', fastened to the support for the shaft carrying the bevel-gear J and sprocket-wheel P. A spring I is secured one end to the bracket h' and the other end to an arm H′ of the lever H, which tends to bring the jaw S into engagement with jaw R, and thus enable the governor to be driven by the motor. The free end of lever H carries a cam E directly in line with a roller F at the end of a finger G^2, attached to the operating bar or shaft G′. The inner face of the cam adjacent to the roller F is curved to conform to the line of travel of the roller and has inclined ends. When the operating-shaft is in its central position, the roller is central between the ends of the cam and in such position holds the clutch open. When the operating-shaft is thrown in either direction to admit current to the motor, the roller F passes along the face of the cam, still holding the lever H against the action of the spring until the operating-bar is thrown a sufficient distance to close the snap-switch, at which instant the roller F passes onto the inclined end of the cam and the spring I acts to lock the clutch. Thus this device accomplishes the same result attained by the first-described and preferred construction. If it is desired that the clutch should not close until some time after the snap-switch is closed, the cam E is made somewhat longer, as shown in dotted lines, so that the roller F will still engage it after the operating-bar has closed the switch, thus requiring a further movement of the operating-bar to connect the governor with the motor. As soon as the operating-bar is moved toward its center the cam is engaged by the roller, the clutch is unlocked, and the propelling power being thus disconnected from the governor the balls immediately drop and in so dropping carry the rheostat-arm back to its first position, where it stays until the clutch is again closed in the manner described.

I do not intend to limit myself to either of the means which I have described for rendering the governor ineffective to move the rhoestat-arm over the contacts until the operating-shaft has been thrown sufficiently to close the snap-switch, and while both of the means described are purely mechanical it is evident that electrical means, or means partly mechanical and partly electrical, embodying the same principle may be substituted for the means described—as, for instance, a magnet controlling the clutch, the circuit to the magnet being controlled by the movement of the operating-shaft. These and other means it is unnecessary to describe, as one familiar with my invention in its several embodiments herein set forth may vary the details of construction in many different ways.

Having now fully described my invention, what I claim, and desire to protect by Letters Patent, is—

1. The combination with an electric motor, a source of current-supply, electrical connection between the field and armature of the motor and source of supply, of a current-regulating device adapted in its movement to vary the amount of current passing to the motor, means connected with and operated by the motor to normally control the position of the current-regulating device, a switch for admitting current to the motor, and a device connected with said switch adapted to render said means ineffective to move said current-regulating device during the closing of the switch.

2. The combination with an electric motor, a source of current-supply, electrical connection between the field and armature of the motor and source of supply, of a current-regulating device adapted in its movement to vary the amount of current passing to the motor, means connected with and operated by the motor to normally control the position of the current-regulating device, a switch for admitting current to the motor, a device connected with said switch adapted to render said means ineffective to move said current-regulating device during the closing of the switch, and adapted by a further definite movement of the switch to permit said means to be effective.

3. The combination with an electric motor, a source of current-supply, electrical connection between the field and armature of the motor and source of supply, of a current-regulating device adapted in its movement to vary the amount of current passing to the motor, means connected with and operated by the motor to normally control the position of the current-regulating device, a switch for admitting current to the motor, and a device connecting said switch with said current-regu-

lating device, adapted to lock the current-regulating device during the closing of said switch.

4. The combination with an electric motor, a source of current-supply, electrical connection between the field and armature of the motor and source of supply, of a current-regulating device adapted in its movement to vary the amount of current passing to the motor, means connected with and operated by the motor to normally control the position of the current-regulating device, a switch for admitting current to the motor, a device connecting said switch with said current-regulating device, adapted to lock the current-regulating device during the closing of said switch and adapted by a further definite movement of said switch to unlock said current-regulating device.

5. The combination with an electric motor, a source of current-supply, electrical connection between the field and armature of the motor and source of supply, of a current-regulating device adapted in its movement to vary the amount of current passing to the motor, means connected with and operated by the motor to normally control the position of the current-regulating device, a switch for admitting current to the motor, an operating bar or shaft for controlling the switch, levers connected with the operating-bar and current-regulating device respectively, so connected together as to permit one to slide upon or in relation to the other, a latch on the last-specified lever, and a device independently supported adapted to be engaged by said latch and lock said lever and the current-regulating device from moving toward said operating-bar during the closing of the switch.

6. The combination with an electric motor, a source of current-supply, electrical connection between the field and armature of the motor and source of supply, of a current-regulating device adapted in its movement to vary the amount of current passing to the motor, means connected with and operated by the motor to normally control the position of the current-regulating device, a switch for admitting current to the motor, an operating bar or shaft for controlling the switch, levers connected with the operating-bar and current-regulating device respectively so connected together as to permit one to slide upon or in relation to the other, a latch on the last-specified lever, and a device independently supported adapted to be engaged by said latch and lock said lever and the current-regulating device from moving toward said operating-bar during the closing of the switch, the device being of such length as to disengage said latch and unlock said lever and current-regulating device by a further movement of the switch.

7. The combination with an electric motor, a source of current-supply, electrical connection between the field and armature of the motor and source of supply, of a current-regulating device adapted in its movement to vary the amount of current passing to the motor, a centrifugal governor driven by the motor, connection between said governor and the current-regulating device, the connection being such that the position of the governor normally controls the position of the current-regulating device, a switch for admitting current to the motor, and a device connected with said switch adapted to render said governor ineffective to move said current-regulating device during the closing of said switch.

8. The combination with an electric motor, a source of current-supply, electrical connection between the field and armature of the motor and source of supply, of a current-regulating device adapted in its movement to vary the amount of current passing to the motor, a centrifugal governor driven by the motor, connection between said governor and the current-regulating device, the connection being such that the position of the governor normally controls the position of the current-regulating device, a switch for admitting current to the motor, and a device connected with said switch adapted to render said governor ineffective to move said current-regulating device during the closing of said switch and adapted by a further definite movement of the switch to permit said governor to be effective.

9. The combination with an electric motor, a source of current-supply, electrical connection between the field and armature of the motor and source of supply, of a current-regulating device adapted in its movement to vary the amount of current passing to the motor, a centrifugal governor driven by the motor, connection between said governor and the current-regulating device, the connection being such that the position of the governor normally controls the position of the current-regulating device, a switch for admitting current to the motor, and a device connecting said switch with said current-regulating device, adapted to lock the current-regulating device during the closing of said switch.

10. The combination with an electric motor, a source of current-supply, electrical connection between the field and armature of the motor and source of supply of a current-regulating device adapted in its movement to vary the amount of current passing to the motor, a centrifugal governor driven by the motor, connection between said governor and the current-regulating device, the connection being such that the position of the governor normally controls the position of the current-regulating device, a switch for admitting current to the motor, and a device connecting said switch with said current-regulating device, adapted to lock the current-regulating device during the closing of said switch and adapted by a further definite movement of the switch to unlock said current-regulating device.

11. The combination with an electric motor, a source of current-supply, electrical connec-

tion between the field and armature of the motor and source of supply, of a current-regulating device adapted in its movement to vary the amount of current passing to the motor, a centrifugal governor driven by the motor, connection between said governor and the current-regulating device, the connection being such that the position of the governor normally controls the position of the current-regulating device, a switch for admitting current to the motor, an operating bar or shaft for controlling the switch, levers connected with the operating-bar and current-regulating device respectively so connected together as to permit one to slide upon or in relation to the other, a latch on the last-specified lever, and a device independently supported adapted to be engaged by said latch and lock said lever and the current-regulating device from moving toward said operating-bar during the closing of the switch.

12. The combination with an electric motor, a source of current-supply, electrical connection between the field and armature of the motor and source of supply, of a current-regulating device adapted in its movement to vary the amount of current passing to the motor, a centrifugal governor driven by the motor, connection between said governor and the current-regulating device, the connection being such that the position of the governor normally controls the position of the current-regulating device, a switch for admitting current to the motor, an operating bar or shaft for controlling the switch, levers connected with the operating-bar and current-regulating device respectively so connected together as to permit one to slide upon or in relation to the other, a latch on the last-specified lever, and a device independently supported adapted to be engaged by said latch and lock said lever and the current-regulating device from moving toward said operating-bar during the closing of the switch, the device being of such length as to disengage said latch and unlock said lever and current-regulating device by a further definite movement of the switch.

13. The combination with an electric motor, a source of current-supply, electrical connection between the field and armature of the motor and source of supply, of a current-regulating device adapted in its movement to vary the amount of current passing to the motor, means to operate said current-regulating device, a switch for admitting current to the motor, and a device connected with said switch adapted to render said means ineffective to move said current-regulating device during the closure of the switch.

In testimony of which invention I have hereunto set my hand.

FRANK E. HERDMAN.

Witnesses:

G. E. WEISSENBURGER,

T. E. BARNUM.