(12) INTERNATIONAL APPLICATION PUBLISHED UNDER THE PATENT COOPERATION TREATY (PCT)

(19) World Intellectual Property Organization
International Bureau

(43) International Publication Date
8 July 2010 (08.07.2010)

PCT

(10) International Publication Number
WO 2010/076653 A1

(51) International Patent Classification:
A24F 47/00 (2006.01) *A24D 3/02* (2006.01)

(21) International Application Number:
PCT/IB2009/007953

(22) International Filing Date:
29 December 2009 (29.12.2009)

(25) Filing Language: English

(26) Publication Language: English

(30) Priority Data:
08254189.7 30 December 2008 (30.12.2008) EP

(71) Applicant *(for all designated States except US)*: **PHILIP MORRIS PRODUCTS S.A.** [CH/CH]; Quai Jeanrenaud 3, CH-2000 Neuchatel (CH).

(72) Inventors: **TALLIER, Bernard**; Signal 11, CH-2016 Cortaillod (CH). **LOUVET, Alexis**; Bois-Gentil 122, CH-1018 Lausanne (CH).

(74) Agent: **BRADFORD, Victoria, Sophie**; Reddie & Grose, 16 Theobalds Road, London WC1X 8PL (GB).

(81) Designated States *(unless otherwise indicated, for every kind of national protection available)*: AE, AG, AL, AM, AO, AT, AU, AZ, BA, BB, BG, BH, BR, BW, BY, BZ, CA, CH, CL, CN, CO, CR, CU, CZ, DE, DK, DM, DO, DZ, EC, EE, EG, ES, FI, GB, GD, GE, GH, GM, GT, HN, HR, HU, ID, IL, IN, IS, JP, KE, KG, KM, KN, KP, KR, KZ, LA, LC, LK, LR, LS, LT, LU, LY, MA, MD, ME, MG, MK, MN, MW, MX, MY, MZ, NA, NG, NI, NO, NZ, OM, PE, PG, PH, PL, PT, RO, RS, RU, SC, SD, SE, SG, SK, SL, SM, ST, SV, SY, TH, TJ, TM, TN, TR, TT, TZ, UA, UG, US, UZ, VC, VN, ZA, ZM, ZW.

(84) Designated States *(unless otherwise indicated, for every kind of regional protection available)*: ARIPO (BW, GH, GM, KE, LS, MW, MZ, NA, SD, SL, SZ, TZ, UG, ZM, ZW), Eurasian (AM, AZ, BY, KG, KZ, MD, RU, TJ, TM), European (AT, BE, BG, CH, CY, CZ, DE, DK, EE, ES, FI, FR, GB, GR, HR, HU, IE, IS, IT, LT, LU, LV, MC, MK, MT, NL, NO, PL, PT, RO, SE, SI, SK, SM, TR), OAPI (BF, BJ, CF, CG, CI, CM, GA, GN, GQ, GW, ML, MR, NE, SN, TD, TG).

Published:

— *with international search report (Art. 21(3))*

WO 2010/076653 A1

(54) Title: APPARATUS AND METHOD FOR COMBINING COMPONENTS FOR SMOKING ARTICLES

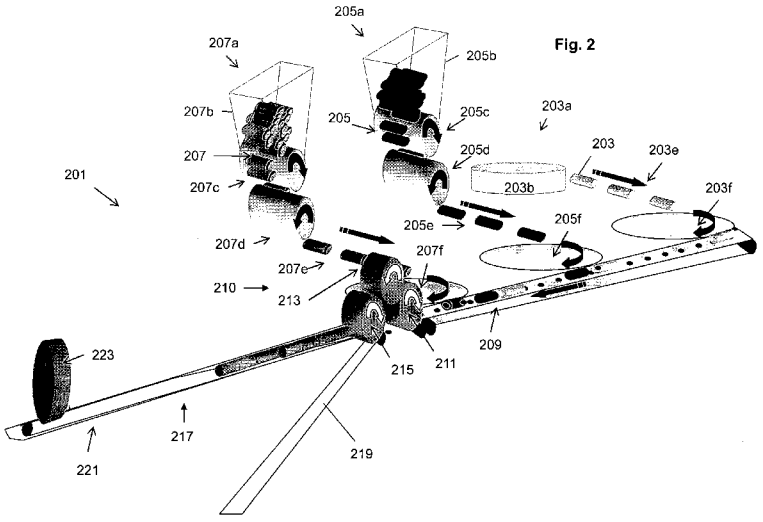

(57) Abstract: There is provided an apparatus and method for combining two or more different components (103, 203;105, 205;107a, 107b, 207) for the production of smoking articles. At least one of the components (103,203) is non-cleanly-cuttable, that is, cannot be cleanly cut with conventional cutting means, for example because it is prone to splinter or fragment. The method comprises the steps of : feeding a stream of components along a moving delivery path (200); compacting the stream of components into groups of two or more different components, each group corresponding to a discrete smoking article, wherein the components within a group abut one another and wherein there is a predefined space between a leading group of components and a trailing group of components; wrapping the components in a web of material; and cutting the web of material in each space between groups of components.

Apparatus and Method for Combining Components for Smoking Articles

The present invention relates to an apparatus and method for combining components for the production of smoking articles.

Apparatus and processes for manufacturing smoking articles consisting of a plurality of components are known in the art. For example, a rolling process may be used, in which the smoking articles and components are substantially perpendicularly aligned with respect to the direction of travel. Alternatively, a linear process may be used, in which the components are substantially longitudinally aligned along the direction of travel. In some arrangements, a combination of the two processes is used, for example, the combining may be carried out as a rolling process and the overwrapping may be carried out as a linear process. However, known apparatus and manufacturing processes are not suitable for manufacturing smoking articles comprising a component made of a material which cannot be cleanly cut with mechanical cutting means, such as a conventional knife or blade.

It is an object of the present invention to provide an apparatus and a method suitable for making smoking articles comprising one or more components made of a material which cannot be cleanly cut with a conventional blade. The apparatus and method of the present invention is particularly, but not exclusively, suitable for manufacturing smoking articles, wherein one of the components is a combustible heat source or fuel element, for example a carbonaceous heat source.

According to a first aspect of the invention, there is provided a method for combining two or more different components for the production of smoking articles, wherein at least one of the components is non-cleanly-cuttable, the method comprising the steps of: feeding a stream of components along a moving delivery path; compacting the stream of components into groups of two or more different components, each group corresponding to a discrete smoking article, wherein the components within a group abut one another and wherein there is a predefined space between a leading group of components and a trailing group of components; wrapping the components in a web of material; and cutting the web of material in each space between groups of components.

According to the first aspect of the invention, there is also provided a method for combining two or more different components for the production of smoking articles, wherein at least one of the components is non-cleanly-cuttable, the method comprising the steps of: feeding a stream of components along a moving delivery path; compacting the stream of components into groups of two or more different components, each group corresponding to a discrete un-tipped smoking article, wherein the components within a group abut one another and wherein there is a predefined space between a leading group of components and a trailing group of components; wrapping the components in a web of material; and cutting the web of material in each space between groups of components.

The non-cleanly-cuttable component is a component which cannot be cleanly cut with conventional mechanical cutting means. For example, the component may comprise a brittle material or a material having a tendency to splinter, crumble or fragment when cut with a conventional blade. Preferably, the non-cleanly-cuttable component is adjacent the space between two groups of components. The smoking article may be tipped or un-tipped. An un-tipped smoking article comprises all components for a smoking article, that is, the entire number and all the types of components for a smoking article, except for a smoking article tip, such as a mouthpiece and a wrapper. Preferably, the non-cleanly-cuttable component and the tip are at opposite ends of the smoking article. The two or more different components may comprise a non-cleanly-cuttable component plus one, two, three, four, five or more further components. Preferably, the two or more different components comprise a non-cleanly-cuttable component plus two, three or four components. Even more preferably, the two or more different components comprise a non-cleanly-cuttable component plus three components, one component of a first type and two components of a second type. The terms "leading group of components" and "trailing group of components" are used to indicate the relative positions of the groups of components on the moving delivery path, and do not necessarily indicate the positions of the components in a smoking article.

The method and apparatus of the invention may advantageously be used to produce various smoking articles but are particularly useful in the manufacture of heated smoking articles such as those described in granted patents US-A-4,714,082, US-A-5,819,751 and US-A-5,040,551, distillation-based smoking articles such as those described in pending patent application PCT/IB2008/002868, and heated cigarettes such as those marketed by the R. J. Reynolds Tobacco Company under the brand names Premier® and Eclipse®.

The method according to the invention is advantageous since different components can easily be substituted, so that the method may readily be adapted to produce different types of smoking article, in different production runs. The method is also advantageous since it can be used to manufacture smoking articles at high speed. Cutting the web of material at the spaces, rather than through the non-cleanly-cuttable component, avoids the risk of damage to the cutting means. In the case of a carbonaceous heat source, this also means that other components do not get black or dirty.

Preferably, the components on the delivery path have their longitudinal axes substantially aligned with each other and with the direction of movement of the delivery path. Preferably, the components on the delivery path are the cylindrical components of the smoking articles. Such a linear combining process is advantageous since it causes minimal or no damage to the components within each smoking article.

The step of feeding the stream of components along the moving delivery path preferably comprises interleaving each of the two or more different components with others of the two or more different components, such that the components on the delivery path are in a desired and

predetermined order.

In a preferred embodiment, the order of the components on the moving delivery path corresponds to smoking articles all facing the same direction with respect to the direction of movement of the delivery path. That is, the components are aligned first component, second component, third component, first component, second component, third component, first component and so on, or equivalently for the appropriate number of components. For example, the components may be aligned heat source, then aerosol-generating substrate, then elongate expansion chamber, then heat source, then aerosol-generating substrate, then elongate expansion chamber and so on.

In that preferred embodiment, preferably the method further comprises, after the step of cutting the web of material in each space between groups of components, rotating every alternate smoking article, such that adjacent smoking articles are facing in the opposite direction with respect to the direction of travel.

In an alternative embodiment, the order of the components on the moving delivery path corresponds to alternate smoking articles facing in opposite directions with respect to the direction of movement of the delivery path. That is, the components are aligned first component, second component, third component, third component, second component, first component, first component, and so on, or equivalently for the appropriate number of components. For example, the components may be aligned heat source, then aerosol-generating substrate, then elongate expansion chamber, then elongate expansion chamber, then aerosol-generating substrate, then heat source and so on.

In one embodiment, the step of compacting the stream of components into groups of components comprises: separating the stream of components into groups of two or more different components, wherein each group corresponds to a discrete smoking article; compacting the components within a group such that they abut one another; and setting the pre-defined space between a leading group of components and a trailing group of components.

The size of the pre-defined space is the size desired between groups of components corresponding to discrete smoking articles. The web of material is cut at each space. Therefore, the size of each space should be accurate, since an inaccurate space could result in damage to the cutting means. The space should be sufficiently large so that the cutting means is able to cut the web of material, but sufficiently small so as not to waste the web of material. In one embodiment, the pre-defined spaced is 1 mm ± 0.5. mm, that is, between 0.5 mm and 1.5 mm. Even more preferably, the pre-defined space is between 0.8 mm and 1.2 mm.

If each group of components corresponds to a discrete un-tipped smoking article, the method of the invention may further comprise, after the step of cutting the web of material, the step of tipping un-tipped smoking articles with tips, to form tipped smoking articles. Preferably, the tip is a mouthpiece. The mouthpiece may comprise cellulose acetate tow. Preferably, the mouthpiece is cylindrical. Preferably, the step of tipping comprises securing the tip to the un-

tipped smoking article by tipping paper.

Preferably, the step of wrapping the components in a web of material comprises wrapping the components in a paper web. Preferably, the web of material comprises pre-applied heat-conducting elements, for example patches of aluminium foil, spaced along the inside of the web of material. The position of the pre-applied heat-conducting elements on the web of material should be precise. The method may further comprise the step of applying glue areas or lines or a continuous or intermittent stream of glue to a web or to patches of heat-conducting material, for subsequent application to the web of material. The method may further comprise the step of applying spaced patches of the heat-conducting material to the inside of the web of material.

The method may further comprise the step of applying glue areas or lines or a continuous or intermittent stream of glue to the inside of the web of material before the step of wrapping the components in the web of material. This will allow the web of material to be secured to one or more of the components. This may assist in maintaining the integrity of the finished smoking articles.

Preferably, the components are substantially cylindrical, with a circular or elliptical cross section.

In a preferred embodiment, the non-cleanly-cuttable component is a heat source. Each heat source may be a carbon-based heat source. Each heat source may be a non-compressible pyrolised carbon-based heat source. Preferably, the heat source is cylindrical. In that case, each heat source on the delivery path preferably has its longitudinal axis substantially aligned with the direction of movement of the delivery path. The heat source may include one or more airflow channels therethrough.

Preferably, the two or more different components include one or more aerosol-generating substrates. Each substrate may comprise tobacco material. Preferably, each substrate is cylindrical. In that case, each substrate on the delivery path preferably has its longitudinal axis substantially aligned with the direction of movement of the delivery path.

Preferably, the two or more different components include one or more elongate expansion chambers. Preferably, each elongate expansion chamber is cylindrical. In that case, each elongate expansion chamber on the delivery path preferably has its longitudinal axis substantially aligned with the direction of movement of the delivery path. Even more preferably, each elongate expansion chamber may comprise a cylindrical open-ended tube. The tube may comprise cardboard.

The components may further include other components, for example a barrier material for locating between the heat source and the aerosol-generating substrate.

In a preferred embodiment, the two or more different components comprise non-cleanly-cuttable heat sources, aerosol-generating substrates, and elongate expansion chambers and each group corresponding to a discrete smoking article comprises one of the non-cleanly-

cuttable heat sources, one or more of the aerosol-generating substrates, and one or more of the elongate expansion chambers.

According to a second aspect of the invention, there is provided apparatus for combining two or more different components for the production of smoking articles, wherein at least one of the components is non-cleanly-cuttable, the apparatus comprising: feeding means for feeding a stream of components along a moving delivery path; compacting means for compacting the stream of components into groups of two or more different components, each group corresponding to a discrete smoking article, wherein the components within a group abut one another and wherein there is a predefined space between a leading group of components and a trailing group of components; wrapping means for wrapping the components in a web of material; and cutting means for cutting the web of material in each space between groups of components.

According to a second aspect of the invention, there is provided apparatus for combining two or more different components for the production of smoking articles, wherein at least one of the components is non-cleanly-cuttable, the apparatus comprising: feeding means for feeding a stream of components along a moving delivery path; compacting means for compacting the stream of components into groups of two or more different components, each group corresponding to a discrete un-tipped smoking article, wherein the components within a group abut one another and wherein there is a predefined space between a leading group of components and a trailing group of components; wrapping means for wrapping the components in a web of material; and cutting means for cutting the web of material in each space between groups of components.

Preferably, the components on the delivery path have their longitudinal axes substantially aligned with each other and with the direction of movement of the delivery path. Such a linear combining process is advantageous since it causes minimal or no damage to the components within each smoking article.

Preferably, the feeding means is arranged to interleave each of the two or more different components with others of the two or more different components, such that the components on the delivery path are in a desired and predetermined order. Preferably, the feeding means is arranged to interleave each of the two or more different components with others of the two or more different components with a distance therebetween in accordance with the desired order on the delivery path.

In a preferred embodiment, the order of the components on the moving delivery path corresponds to smoking articles all facing the same direction with respect to the direction of movement of the delivery path.

In that preferred embodiment, preferably the apparatus further comprises a turning drum, after the cutting means, for rotating every alternate smoking article, such that adjacent smoking articles are facing in the opposite direction with respect to the direction of travel.

In an alternative embodiment, the order of the components on the moving delivery path corresponds to alternate smoking articles facing in opposite directions with respect to the direction of movement of the delivery path.

Preferably, the feeding means comprises at least one indexing wheel for feeding components onto the moving delivery path. Preferably, each indexing wheel comprises a plurality of fingers around its circumference. Preferably, the separation of the fingers sets the distance between the components on the delivery path.

In one embodiment, the feeding means comprises first and second supply drums for feeding each component onto a feeding path upstream of the delivery path. Preferably, the first supply drum comprises a plurality of longitudinal flutes around its circumference. Preferably, each flute on the first drum is arranged to hold a multiple unit length component, for example a double length, quadruple length or sextuple length component. In that case, preferably, each feeding means further comprises at least one cutter along the first supply drum, such that the multiple unit length component on the first supply drum is cut into single length components for the second supply drum. Preferably, the second supply drum comprises a plurality of longitudinal flutes around its circumference. Preferably, the flutes are axially and circumferentially spaced, such that the components are fed, one or more at a time, onto the feeding path. Preferably, the feeding means comprises a hopper for feeding multiple unit length components onto each first supply drum.

Preferably, the compacting means comprises: a first wheel having circumferentially spaced fixed fingers for separating the stream of components into groups of two or more different components, wherein each group corresponds to a discrete smoking article; a second wheel, downstream of the first wheel, having circumferentially spaced moveable fingers more closely spaced than the fixed fingers on the first wheel, for compacting the components within a group such that they abut one another; and a third wheel, downstream of the second wheel, having circumferentially spaced moveable fingers, for setting the pre-defined space between a leading group of components and a trailing group of components.

In one embodiment, the first and second wheels have substantially equal diameters. The moveable fingers on the second wheel allow the components to be transferred between the first and second wheels, even though the wheels may be rotating at different speeds. This is preferably achieved by driving the moveable fingers on the second wheel by cams.

In one embodiment, the second and third wheels have different diameters and the circumferentially spaced moveable fingers on the third wheel are narrower than the circumferentially spaced moveable fingers on the second wheel. This allows the separation between groups of components to be reduced as the components are transferred from the second wheel to the third wheel. The moveable fingers on the third wheel allow for precision and accuracy in the size of the space between groups of components. This is preferably achieved by driving the moveable fingers on the third wheel by cams.

The web of material may comprise a web of paper material, for example cigarette paper. Preferably, the web of material supplied to the wrapping means comprises pre-applied heat-conducting elements spaced along the inside of the web of material. The apparatus may further comprise gluing means for applying glue areas or lines or a continuous or intermittent stream of glue to a web or to patches of heat-conducting material, for subsequent application to the web of material. The apparatus may further comprise applicator means for applying spaced patches of the heat-conducting material to the inside of the web of material.

The apparatus may further comprise gluing means for applying glue areas or lines or a continuous or intermittent stream of glue to the inside of the web of material before the wrapping means for wrapping the components in the web of material.

If each group of components corresponds to a discrete un-tipped smoking article, the apparatus may further comprise a tipper downstream of the cutting means, for tipping un-tipped smoking articles with tips, to form smoking articles. Preferably, the tip is a mouthpiece. The mouthpiece may comprise cellulose acetate tow. Preferably, the mouthpiece is cylindrical. Preferably, the tipper secures the tip to the un-tipped smoking article by tipping paper. The tipper may comprise any suitable tipper. Examples of suitable tippers are the Max-S tipper made by Hauni AG of Germany, and the Max-80 tipper also made by Hauni AG of Germany.

In a preferred embodiment, the non-cleanly-cuttable component is a heat source. Each heat source may be a carbon-based heat source. Each heat source may be a non-compressible pyrolised carbon-based heat source. Preferably, the heat source is cylindrical. In that case, each heat source on the delivery path preferably has its longitudinal axis substantially aligned with the direction of movement of the delivery path. The heat source may include one or more airflow channels therethrough.

Preferably, the two or more different components include one or more aerosol-generating substrates. Each substrate may comprise tobacco material. Preferably, each substrate is cylindrical. In that case, each substrate on the delivery path preferably has its longitudinal axis substantially aligned with the direction of movement of the delivery path.

Preferably, the two or more different components include one or more elongate expansion chambers. Preferably, each elongate expansion chamber is cylindrical. In that case, each elongate expansion chamber on the delivery path preferably has its longitudinal axis substantially aligned with the direction of movement of the delivery path. Even more preferably, each elongate expansion chamber may comprise a cylindrical open-ended tube. The tube may comprise cardboard.

The components may further include other components, for example a barrier material for locating between the heat source and the aerosol-generating substrate.

In a preferred embodiment, the two or more different components comprise non-cleanly-cuttable heat sources, aerosol-generating substrates, and elongate expansion chambers and each group corresponding to a discrete smoking article comprises one of the non-cleanly-

cuttable heat sources, one or more of the aerosol-generating substrates, and one or more of the elongate expansion chambers.

Features described in relation to one aspect of the invention may also be applicable to another aspect of the invention.

The invention will be further described, by way of example only, with reference to the accompanying drawings in which:

Figure 1 shows a distillation-based smoking article;

Figure 2 is a perspective schematic view of an exemplary embodiment of the apparatus according to the invention;

Figure 3 shows a first example of components ordered on a vacuum belt;

Figure 4 shows a second example of components ordered on a vacuum belt;

Figure 5 is a schematic view of an exemplary embodiment of the compacting means of Figure 2; and

Figure 6 is a schematic view of one embodiment of apparatus used to apply heat-conducting elements to a paper web.

One preferred exemplary embodiment of the apparatus and method of the invention, will now be described. The apparatus may be used during manufacture of a distillation-based smoking article, for example, the smoking article shown in Figure 1. In Figure 1, the smoking article 101 comprises a non-cleanly-cuttable combustible heat source 103, an aerosol-generating substrate 105, two elongate expansion chambers 107a and 107b and a mouthpiece 109, in abutting coaxial alignment, which are overwrapped in an outer paper wrapper 111. In this embodiment, the non-cleanly-cuttable heat source 103 is cylindrical and includes a central airflow channel 113 which extends longitudinally through the heat source 103. The aerosol-generating substrate 105 is located immediately downstream of the heat source 103 and, in this embodiment, comprises a cylindrical plug of homogenised tobacco material 117, consisting of longitudinally aligned filaments of extruded tobacco material. A heat-conducting element 121 consisting, in this embodiment, of aluminium foil, surrounds and is in contact with a rear portion of the non-cleanly-cuttable heat source 103 and an abutting front portion of the aerosol-generating substrate 105. The elongate expansion chambers 107a and 107b are located downstream of the aerosol-generating substrate 105 and, in this embodiment, comprise cylindrical open-ended tubes of cardboard 123. The mouthpiece 109 is located downstream of the expansion chambers 107a and 107b and, in this embodiment, comprises a cylindrical plug of cellulose acetate tow 125. In this embodiment, the outer paper wrapper 111 includes perforations 129 around its circumference, just upstream of the heat conducting element 121. The smoking article 101 is circumscribed by tipping paper 131.

Figure 1 shows one embodiment of a particular distillation-based smoking article. Various modifications are possible, however. For example, one or more of the following modifications may be made if desired. The heat source may comprise additional or differently

arranged airflow channels. The aerosol-generating substrate may comprise any suitable material. Additional aerosol-generating substrates may also be included, for example including different tobacco material or flavourings. A barrier material may be included between the heat source and the aerosol-generating substrate. Instead of two shorter expansion chambers, a single long expansion chamber may be provided. Any suitable mouthpiece may be included, or the mouthpiece may be omitted completely. Tipping paper may be omitted. The perforations may be omitted, or may be positioned adjacent the heat conducting element, such that a consumer is able to see the aluminium foil through the perforations.

Figure 2 is a perspective schematic view of one exemplary embodiment of the apparatus of the invention. Figure 2 shows an embodiment of apparatus for combining a plurality of components for the production of un-tipped smoking articles. The embodiment of Figure 2 may be used for manufacture of smoking articles, including a component that is not cleanly cuttable with conventional mechanical cutting means, such as the smoking article described above with reference to Figure 1. In the embodiment of Figure 2, each smoking article comprises a non-cleanly-cuttable heat source 203, an aerosol-generating substrate 205, two elongate expansion chambers 207 and a mouthpiece (not shown). The apparatus shown in Figure 2 is arranged to combine the heat sources 203, aerosol-generating substrates 205 and expansion chambers 207 to form un-tipped smoking articles, to which the mouthpieces may be attached, optionally using tipping paper, to form finished smoking articles.

Referring to Figure 2, the apparatus 201 comprises first feeding means 203a for the heat sources 203, second feeding means 205a for the aerosol-generating substrates 205, and third feeding means 207a for the expansion chambers 207. In the embodiment of Figure 2, first feeding means 203a comprises vibrating bowl 203b, belt 203e and indexing wheel 203f. In the embodiment of Figure 2, second feeding means 205a comprises hopper 205b, primary supply drum 205c, secondary supply drum 205d, vacuum belt 205e and second indexing wheel 205f. In the embodiment of Figure 2, third feeding means 207a comprises hopper 207b, primary supply drum 207c, secondary supply drum 207d, vacuum belt 207e and indexing wheel 207f. The apparatus 201 further comprises vacuum belt 209 and compacting means 210 for compacting the stream of components into groups of components, in the form of wheels 211, 213, 215, a garniture region 217 using paper web feed 219 and belt 221, and cutting means in the form of blade 223. Further details of the compacting means 210 including wheels 211, 213 and 215 are shown in Figure 5.

The general operation of the Figure 2 apparatus is as follows. The heat sources 203 are introduced from vibrating bowl 203b onto belt 203e, then via indexing wheel 203f onto vacuum belt 209. The aerosol-generating substrates 205 are introduced from hopper 205b, via primary supply drum 205c and secondary supply drum 205d onto vacuum belt 205e, then via indexing wheel 205f onto vacuum belt 209. Similarly, the expansion chambers 207 are introduced from hopper 207b, via primary supply drum 207c and secondary supply drum 207d onto vacuum belt

207e, then via indexing wheel 207f onto vacuum belt 209. The various components 203, 205 and 207 are introduced with appropriate spacing and speed such that their longitudinal axes are substantially axially aligned with each other and with the direction of movement of vacuum belt 209 in the required order. Supply of the components is also described in more detail with reference to Figures 3 and 4.

The various components pass along the vacuum belt 209 in order, and then pass into the compacting means 210. The function of the compacting means 210 is to compact the stream of components into groups of components, each group corresponding to a discrete un-tipped smoking article, so that the components within a group abut one another and there is a predefined space between a leading group of components and a trailing group of components. Further, the compacting means registers the position of each space so that the blade can cut the web of material in each space between groups of components. The compacting means 210 will be described in detail with reference to Figure 5.

After the compacting means 210, the components are overwrapped with paper web in the garniture region 217. The paper web feed 219 may include pre-applied heat-conducting elements (possibly in the form of aluminium foil patches - see 121 in Figure 1), appropriately spaced, as will be described further with reference to Figure 6. Once the components have been overwrapped with the paper web from feed 219, the web is cut at appropriate junctures, at blade 223.

Supply of the aerosol-generating substrates and expansion chambers will now be further described. Referring once again to Figure 2, supply drums 205c and 205d are used to supply the aerosol-generating substrates 205 from hopper 205b onto the vacuum belt 205e. Supply drums 207c and 207d are used to supply the expansion chambers 207 from hopper 207b onto the vacuum belt 207e.

Primary drum 205c, for the aerosol-generating substrates 205, includes a plurality of longitudinal flutes (not shown) around its circumference, aligned with the axis of rotation. In this embodiment, primary drum 205c rotates in a clockwise direction. Secondary drum 205d also includes a plurality of longitudinal flutes (not shown) around its circumference. However, each flute on secondary drum 205d extends along only one sixth of the length of the drum and is arranged to hold a single length aerosol-generating substrate. The flutes on secondary drum 205d are stepped relative to one another around the circumference of the drum. Along the primary drum 205c, there are five rotating cutting blades (not shown), which cut the x6 aerosol-generating substrate lengths on primary drum 205c into single length aerosol-generating substrates for the secondary drum 205d. In this embodiment, secondary drum 205d rotates in an anti-clockwise direction and individually deposits the single length aerosol-generating substrates 205 onto vacuum belt 205e. The vacuum belt 205e may include fixed fingers to ensure correct positioning of the components.

Primary drum 207c, for the expansion chambers 207, includes a plurality of longitudinal

flutes (not shown) around its circumference, aligned with the axis of rotation. In this embodiment, primary drum 207c rotates in a clockwise direction. Primary drum 207c is arranged to hold 4x length expansion chambers. Secondary drum 207d also includes a plurality of longitudinal flutes (not shown) around its circumference. However, each flute on secondary drum 207d extends along only half of the length of the drum and is arranged to hold two single length expansion chambers. The flutes on secondary drum 207d are stepped relative to one another around the circumference of the drum. Along the primary drum 207c, there are three rotating cutting blades (not shown), which cut the x4 expansion chambers on primary drum 207c into single length expansion chambers for the secondary drum 207d. In this embodiment, secondary drum 207d rotates in an anti-clockwise direction. Then, the two single length expansion chambers are deposited together onto vacuum belt 207e to provide two expansion chambers in each finished smoking article. The vacuum belt may include fixed fingers to ensure correct positioning of the components.

Typically, suction is used to hold the components to the drums and known vacuum transfer techniques are used to transfer the components between drums. However, other mechanisms may be used. In the embodiment of Figure 2, primary drum 205c includes 42 longitudinal flutes and secondary drum 205d includes 72 stepped longitudinal flutes. In the embodiment in Figure 2, primary drum 207c includes 42 longitudinal flutes and secondary drum 207d includes 24 stepped longitudinal flutes. Of course, other numbers of flutes are possible and the flutes may or may not be evenly spaced around the drum.

Between vacuum belt 205e and vacuum belt 209, there is an indexing wheel 205f. The indexing wheel 205f rotates and supplies the aerosol-generating substrates 205 onto the vacuum belt 209. In this embodiment, there are four fixed fingers (not shown) on indexing wheel 205f, which separate the substrates from one another. In this embodiment, indexing wheel 205f sets the distance between aerosol-generating substrates as they are transferred onto vacuum belt 209. The speed of vacuum belt 205e is set to cooperate with the rotational speed of indexing wheel 205f and the speed of vacuum belt 209.

Between vacuum belt 207e and vacuum belt 209, there is an indexing wheel 207f. The indexing wheel 207f rotates and supplies the expansion chambers, two at a time, onto the vacuum belt 209. In this embodiment, there are four fixed fingers (not shown) on indexing wheel 207f, which separate the expansion chambers into groups of two, that is, a fixed finger is positioned after every second expansion chamber. In this embodiment, indexing wheel 207f sets the distance between expansion chamber pairs as they are transferred onto vacuum belt 209. The speed of vacuum belt 207e is set to cooperate with the rotational speed of indexing wheel 207f and the speed of vacuum belt 209.

Supply of the heat sources will now be further described. Referring once again to Figure 2, vibrating bowl is used to supply the (pre-cut) heat sources onto the belt 203e.

Between belt 203e and vacuum belt 209, there is an indexing wheel 203f. The indexing

wheel 203f rotates and supplies the heat sources onto the vacuum belt 209. In this embodiment, there are four or six fixed fingers (not shown) on indexing wheel 203f.

The desired spacing and ordering of the various components on vacuum belt 209 and the number of fixed fingers on indexing wheel 203f will depend on the structure of the resulting smoking article and also on the later processes involved in manufacturing. In some arrangements (see, for example, Figure 3 discussed below), a regular spacing between components will be required. That is, the same space between one component and the next component will always be needed. This is set by the indexing wheels 203f, 205f, 207f. In particular, for the arrangement shown in Figure 3, four fixed fingers are provided on indexing wheel 203f. The indexing wheel 203f delivers a controlled number of heat sources onto vacuum belt 209 from continuous supply from belt 203e. For the Figure 3 arrangement, one heat source is provided onto vacuum belt 209 at a time and there is equal spacing between heat sources.

In other arrangements however (see, for example, Figure 4 discussed below), a non regular spacing between components will be required. That is, the space between one component and the next will not always be the same. In one advantageous arrangement, there are two different spacings between components of the same type, so that there is a first space between first component and second component, a second space between second component and third component, the first space again between third component and fourth component, the second space again between fourth component and fifth component, and so on. Again, this is set by the indexing wheels 203f, 205f, 207f. In particular, for the arrangement shown in Figure 4, six fixed fingers are provided on indexing wheel 203f. The indexing wheel 203f delivers a controlled number of heat sources onto vacuum belt 209 from continuous supply from belt 203e. For the Figure 4 arrangement, two heat sources are provided onto vacuum belt 209 at a time. The space between each pair of heat sources is created by a difference in speed between indexing wheel 203f and vacuum belt 209. The speed of vacuum belt 209 is three times higher than the tangential speed of the indexing wheel 203f. This produces a space equal to two twice the heat source length between each pair of heat sources.

Figure 3 shows one possible order for the components on vacuum belt 209. The components are simply in the order that they will be positioned in the finished un-tipped smoking articles. That is: heat source 203, then aerosol-generating substrate 205, then expansion chambers 207, then another heat source 203, then another aerosol-generating substrate 205, then further expansion chambers 207 and so on. This means that there is equal spacing between each heat source from first feeding means 203a (as discussed above), equal spacing between each aerosol-generating substrate from second feeding means 205a and equal spacing between each expansion chamber pair from third feeding means 207a. The scissor symbols in Figure 3 indicate where the paper web will be cut at blade 223 or further downstream. In Figure 3, the spacing between components of the same type is indicated at 301.

The order shown in Figure 3 is advantageous because it allows flexibility of the heat conducting element length and position, and it allows for increased accuracy. However, during existing manufacturing processes, typically, a double length rod is formed, which is then cut in two, has a double length filter mouthpiece inserted between the two single length rods and a double length of tipping paper applied. In order to allow for this with the Figure 3 arrangement, a turning drum may be provided downstream of the compacting means, before the tipper. The turning drum takes a continuous line of un-tipped smoking articles and rotates alternate un-tipped smoking articles, thereby allowing a double length filter mouthpiece to be inserted between the two single length un-tipped smoking articles, as in existing processes.

Figure 4 shows another possible order for the components on vacuum belt 209. The components are ordered to create two smoking article rods at a time, one facing forward, one facing rearward. That is: heat source 203, then aerosol-generating substrate 205, then expansion chambers 207, then further expansion chambers 207, then another aerosol-generating substrate 205, then another heat source 203, then a third heat source 203 and so on. Such an arrangement is advantageous because it may be used with existing tipping processes, without the need for a turning drum. In order to achieve the non-uniform spacing in Figure 4, indexing wheels 203f, 205f and 207f of feeding means 203a, 205a and 207a are arranged to supply the components onto vacuum belt 209 with two different spacings between components of the same type (as discussed above). The first spacing between heat sources is shown as 401. The second spacing between heat sources is shown as 403. (There are corresponding spaces (not labelled) between other components of the same type.) The first spacing 401 is the spacing between heat sources in one double-length un-tipped smoking article. The second spacing 403 is the spacing between heat sources in adjacent double-length un-tipped smoking article. The vacuum belt 209 moves the components, in their desired positions, towards compacting means 210. Suction is applied from underneath belt 209 which assists to adhere the components to the belt.

Figure 5 shows one exemplary embodiment of compacting means 210 of Figure 2. In Figure 5, the components enter the compacting means at 501 on belt 209 and exit the compacting means at 503 on belt 221. In Figure 5, the components are shown in the order of Figure 4, that is, to create two un-tipped smoking articles at a time, one facing forward, one facing rearward. However, any suitable component ordering is possible.

In this embodiment, compacting means 210 includes three wheels 211, 213 and 215. First wheel 211 is used to separate the plurality of components into groups of components. In this embodiment, first wheel 211 includes seven fixed, circumferentially-spaced fingers 505a and is arranged to rotate in a clockwise direction. Second wheel 213 is used to compact the components within each group. In this embodiment, second wheel 213 includes eight circumferentially-spaced moveable thick fingers 507a and is arranged to rotate in an anti-clockwise direction. Each moveable thick finger 507a is driven by a cam 507b, rather than being

fixed to wheel 213, so that movement of each thick finger 507a, relative to wheel 213, is possible. Third wheel 215 is used to set the spacing between each group of components. In this embodiment, third wheel 215 includes eight circumferentially-spaced moveable thin fingers 509a and is arranged to rotate in a clockwise direction. The desired spacing between each un-tipped smoking article is created either by having a moveable thin finger with the corresponding dimension, or by adjusting the speed ratio between the compacting means 210 and the belt 221. Each moveable thin finger 509a is driven by a cam 509b, rather than being fixed to wheel 215, so that movement of each thin finger 509a, relative to wheel 215, is possible.

The components are fed into the compacting means 210 at 501 on belt 209. They are then guided onto wheel 211 by guide 511 and carried by wheel 211 in a clockwise direction, as shown by the arrow. Each fixed finger 505a is positioned between components of one un-tipped smoking article and the next un-tipped smoking article, each un-tipped smoking article including a group of components. Since the components are likely to be fairly well spaced out on belt 209, they remain fairly well spaced out on wheel 211.

At the interface between first wheel 211 and second wheel 213, the components are transferred to the second wheel 213 and begin to rotate in an anti-clockwise direction, as shown by the arrow. The components are guided onto wheel 213 by guide 513. Each moveable thick finger 507a takes the place of fixed finger 505a and is positioned between components of one un-tipped smoking article and the next un-tipped smoking article. Because wheel 211 includes seven fixed fingers 505a, whereas wheel 213 includes eight moveable fingers 507a, in order for successful transfer of components from wheel 211 to wheel 213, the two wheels must be rotating at different speeds. This is because the wheels have the same diameter so, for each full rotation of wheel 213, which corresponds to eight smoking article rods, wheel 211 must turn one and one seventh rotations. In order to accommodate this speed difference at the interface, moveable fingers 507a are driven by cams 507b rather than being fixed to wheel 213. This allows moveable fingers 507a to travel at the same speed as fixed fingers 505a at the interface, by moving relative to wheel 213. Then, once the components are transferred, the cams 507b allow the moveable fingers 507a to return to rotation at the same speed as wheel 213. Since there are eight spaces between moveable fingers on wheel 213, but only seven spaces between fixed fingers on wheel 211, the components within a group of components on wheel 213 are closer together than on wheel 211.

The components are then carried by wheel 213 in an anti-clockwise direction, as shown by the arrow. As already mentioned, each moveable thick finger 507a is positioned between components of one un-tipped smoking article and the next un-tipped smoking article.

At the interface between second wheel 213 and third wheel 215, the components are transferred to the third wheel 215 and begin to rotate in a clockwise direction, as shown by the arrow. The components are guided onto wheel 215 by guide 515. Each moveable thin finger 509a takes the place of moveable thick finger 507a and is positioned between components of

one un-tipped smoking article and the next un-tipped smoking article. Because wheel 215 includes eight moveable fingers, just like wheel 213, wheels 213 and 215 are moving at approximately the same speed at the interface between them. However, moveable fingers 509a are thinner than fingers 507a, which results in a smaller separation between components of one un-tipped smoking article and the next un-tipped smoking article. In order to achieve this, wheel 213 has a slightly different diameter from that of wheel 215. Although moveable fingers 509a may not require very much movement relative to wheel 215, they are nonetheless driven by cams 509b rather than being fixed to wheel 215. This allows the fingers 509a to move relative to wheel 215 at the interface between wheel 213 and wheel 215, should this be needed to compact the components. Furthermore, the cam mechanism allows for adjustment of the speed of the delivery of the components onto belt 221, in order to compact the components against each other.

The components are then carried by wheel 215 in a clockwise direction, as shown by the arrow. At this stage, the separation between groups of components (optionally set by moveable fingers 509a) is the desired space so that, when the components exit the compacting means 210 at 503 on belt 221, they are ready to be overwrapped with paper web in garniture region 217. As already discussed, the blade 223 downstream of the compacting means 210 is arranged to cut the paper web precisely at each gap between un-tipped smoking article components. Thus, the size of the gap between each group of components needs to be accurate. This is particularly important with the smoking article of Figure 1, for example, since the heat sources tend to be hard and difficult to cut. Thus, any incorrect spacing could lead to damage to the blade if it attempts to cut through a heat source. In one embodiment, the gap between groups of components may be 1 mm ± 0.5. mm, that is, between 0.5 mm and 1.5 mm, or more preferably between 0.8 mm and 1.2 mm.

The components may be adhered to each wheel by suction and transferred between wheels using known vacuum transfer techniques. Other techniques are possible, however.

In Figure 5, wheels 213 and 215 are shown with eight moveable fingers, so that they can accommodate eight groups of components for eight smoking article rods, but any number of moveable fingers greater than one is possible. Wheel 211 is shown with seven fixed fingers, so that it can accommodate seven groups of components for seven smoking article rods, but any number of fixed fingers is possible. The important feature is that the first wheel 211 holds fewer groups of components than the second wheel 213, so that the components are compacted in the transfer from the first wheel to the second wheel.

In garniture region 217, the properly-spaced components are overwrapped with paper from paper feed 219. This may be performed in a conventional manner. As the components move along the belt, on paper from paper feed 219, the channel steadily becomes more cylindrical, thereby wrapping the paper around the components.

Referring to the embodiment of Figure 1, each distillation-based smoking article includes

a heat-conducting element 121 which may consist of aluminium foil. Preferably, the aluminium foil is pre-applied to the paper 111, before being fed into paper feed 219 and wrapped over the components. The application of spaced aluminium foil patches to a paper web may be performed by apparatus like that described in pending patent application EP 08250842.5. One embodiment of such apparatus is shown in Figure 6.

Figure 6 shows a schematic view of one embodiment of apparatus used to apply spaced heat-conducting elements in the form of aluminium patches to a web of paper. The apparatus 601 comprises backplate 603, aluminium foil input 605 from aluminium foil feed bobbin 607, aluminium foil feed dancing rollers 609 and fixed rollers 611, glue applicator 613, patch cutting drum 615, paper input 617, paper input roller 619, patch transfer drum 621 and paper output 623. In this embodiment, the apparatus additionally includes perforation drum 625 and additional glue applicator 627. In Figure 6, the thick line is used to indicate the web of aluminium foil, the thin line is used to indicate the web of paper, and the thin line with spaced thick portions is used to indicate the web of paper with applied patches of aluminium foil.

Aluminium foil web is fed from feed bobbin 607 to the input 605. Then, the aluminium foil is fed around dancing roller 609 which, as shown by the arrows, can move up and down to affect the tension in the foil web. Then, the aluminium foil web is fed in the direction of the arrows, via fixed rollers 611, to the further dancing rollers 609. The dancing rollers 609 set the speed of the incoming web, according to the required speed at the patch cutting drum 615 and the patch transfer drum 621. After the dancing rollers 609, the glue applicator 613 applies glue areas or lines or a continuous or an intermittent stream of glue to the web. Then, the glued aluminium foil web proceeds towards the patch cutting drum 615 and the patch transfer drum 621. Preferably, suction is applied at the entry to patch transfer drum and air is blown outwards at the exit of the patch transfer drum. As the glued aluminium foil web passes between the patch cutting drum 615 and the patch transfer drum 621, the web is cut into individual aluminium patches. The individual patches (glue side out) pass in a clockwise direction around the patch transfer drum 621. Paper is fed into paper input roller 619. As the paper comes into contact with the individual aluminium patches on the patch transfer drum 621, the patches are applied to the paper. The glue may then be dried by heaters (not shown).

The apparatus allows the aluminium patches to be non evenly spaced on the paper web, if that is required (for example for the component order shown in Figure 4). In that case, either electronic driving control or a mechanical cam (not shown) changes the speed of the incoming webs so that patch transfer drum 621 applies the patches to the paper web with two different spacings.

As will be understood by the skilled reader, the position of the aluminium patches on the paper web is critical, as this affects the position of the heat-conducting elements relative to the heat source and aerosol-generating substrate in the eventual smoking articles. This has a great effect on the heat conducting properties of the smoking article, and hence on the temperature

reached at the aerosol-generating substrate and hence on the smoking experience for the user. The aluminium patch may optionally be secured to the heat source, for example via glue from applicator 627, to prevent the heat source from dropping out of the paper overwrap.

The perforation drum 625 is used to perforate the paper, so as to form the perforations 129 in the finished smoking article (see Figure 1). The perforations may alternatively allow a user to peel off part of the paper overwrap from the heat source. This prevents the paper from burning, when the smoking article is lit. The perforations in Figure 1 are shown extending around the circumference of the smoking article. The perforations may, alternatively extend along the length of the smoking article. Alternatively, the perforations may be added downstream in the tipper.

An additional unit may also be supplied to apply printing or other markings to the paper web before input 617 or in the region of glue applicator 627.

Referring once again to Figure 2, the paper web exiting the garniture region 217 is then cut by blade 223. As already discussed, the blade 223 cuts the web in the spaces between groups of components. After cutting, a mouthpiece may be applied to each un-tipped smoking article by tipping paper. The tipping of the un-tipped smoking articles may be carried out by any suitable tipping machine (tipper).

Thus, in the apparatus shown in Figure 2, firstly the components are fed in a stream along the moving vacuum belt 209. Then, in the compacting means 210, the stream of components is compacted into groups of components, each group corresponding to a discrete un-tipped smoking article. The components within a group abut one another and there is a predefined space between a leading group of components and a trailing group of components. Then, in garniture region 217, the components are wrapped in a web of material. Finally, the web of material is cut at each space between groups of components.

CLAIMS

1. A method for combining two or more different components for the production of smoking articles, wherein at least one of the components is non-cleanly-cuttable, the method comprising the steps of:

feeding a stream of components along a moving delivery path (209);

compacting the stream of components into groups of two or more different components, each group corresponding to a discrete smoking article, wherein the components within a group abut one another and wherein there is a predefined space between a leading group of components and a trailing group of components;

wrapping the components in a web of material; and

cutting the web of material in each space between groups of components.

2. A method according to claim 1, wherein the components on the delivery path (209) have their longitudinal axes substantially aligned with each other and with the direction of movement of the delivery path.

3. A method according to claim 1 or claim 2, wherein the order of the components on the moving delivery path (209) corresponds to smoking articles all facing the same direction with respect to the direction of movement of the delivery path.

4. A method according to claim 3, further comprising, after the step of cutting the web of material in each space between groups of components, rotating every alternate smoking article, such that adjacent smoking articles are facing in the opposite direction with respect to the direction of travel.

5. A method according to claim 1 or claim 2, wherein the order of the components on the moving delivery path (209) corresponds to alternate smoking articles facing in opposite directions with respect to the direction of movement of the delivery path.

6. A method according to any preceding claim, wherein each group of components corresponds to a discrete un-tipped smoking article, the method further comprising the step of tipping the un-tipped smoking articles with tips, to form smoking articles.

7. A method according to any preceding claim, wherein the two or more different components comprise non-cleanly-cuttable heat sources (103, 203), aerosol-generating substrates (105, 205), and elongate expansion chambers (107a, 107b, 207) and each group corresponding to a discrete smoking article comprises one of the non-cleanly-cuttable heat

sources, one or more of the aerosol-generating substrates, and one or more of the elongate expansion chambers.

8. A method according to claim 7, wherein the web of material comprises heat-conducting elements spaced along the inside of the web of material.

9. A method according to claim 8, further comprising the step of applying glue areas or lines or a continuous or intermittent stream of glue to a web or to patches of heat-conducting material, and applying spaced patches of the heat-conducting material to the inside of the web of material.

10. A method according to any preceding claim, further comprise the step of applying glue areas or lines or a continuous or intermittent stream of glue to the inside of the web of material before the step of wrapping the components in the web of material.

11. Apparatus (201) for combining two or more different components for the production of smoking articles, wherein at least one of the components is non-cleanly-cuttable, the apparatus comprising:

feeding means (203a, 205a, 207a) for feeding a stream of components along a moving delivery path (209);

compacting means (210) for compacting the stream of components into groups of two or more different components, each group corresponding to a discrete smoking article, wherein the components within a group abut one another and wherein there is a predefined space between a leading group of components and a trailing group of components;

wrapping means (217) for wrapping the components in a web of material; and

cutting means (223) for cutting the web of material in each space between groups of components.

12. Apparatus according to claim 11, wherein the order of the components on the moving delivery path (209) corresponds to smoking articles all facing the same direction with respect to the direction of movement of the delivery path.

13. Apparatus according to claim 12, further comprising a turning drum, after the cutting means (223), for rotating every alternate smoking article, such that adjacent smoking articles are facing in the opposite direction with respect to the direction of travel.

14. Apparatus according to claim 11, wherein the order of the components on the moving delivery path (209) corresponds to alternate smoking articles facing in opposite directions with

respect to the direction of movement of the delivery path.

15. Apparatus according to any of claims 11 to 14, wherein the compacting means (210) comprises:

a first wheel (211) having circumferentially spaced fixed fingers (505a) for separating the stream of components into groups of components, wherein each group corresponds to a discrete smoking article;

a second wheel (213), downstream of the first wheel, having circumferentially spaced moveable fingers (507a) more closely spaced than the fixed fingers on the first wheel (211), for compacting the components within a group such that they abut one another; and

a third wheel (215), downstream of the second wheel, having circumferentially spaced moveable fingers (509a), for setting the pre-defined space between a leading group of components and a trailing group of components.

16. Apparatus according to any of claims 11 to 15, wherein each group of components corresponds to a discrete un-tipped smoking article, the apparatus further comprising a tipper downstream of the cutting means (223), for tipping the un-tipped smoking articles with tips, to form smoking articles.

17. Apparatus according to any of claims 11 to 16, wherein the two or more different components comprise non-cleanly-cuttable heat sources (103, 203), aerosol-generating substrates (105, 205), and elongate expansion chambers (107a, 107b, 207) and each group corresponding to a discrete smoking article comprises one of the non-cleanly-cuttable heat sources, one or more of the aerosol-generating substrates, and one or more of the elongate expansion chambers.

Fig. 1

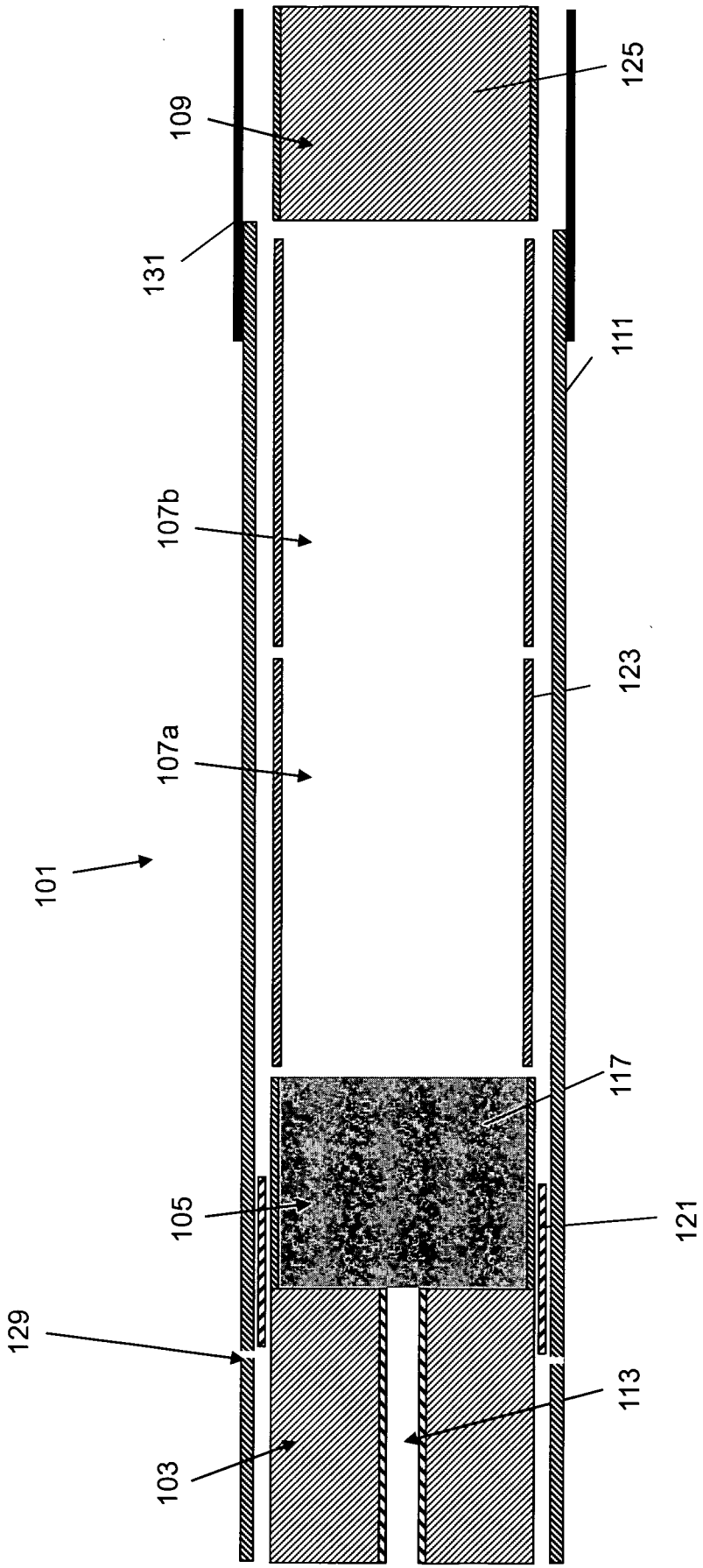

Fig. 2

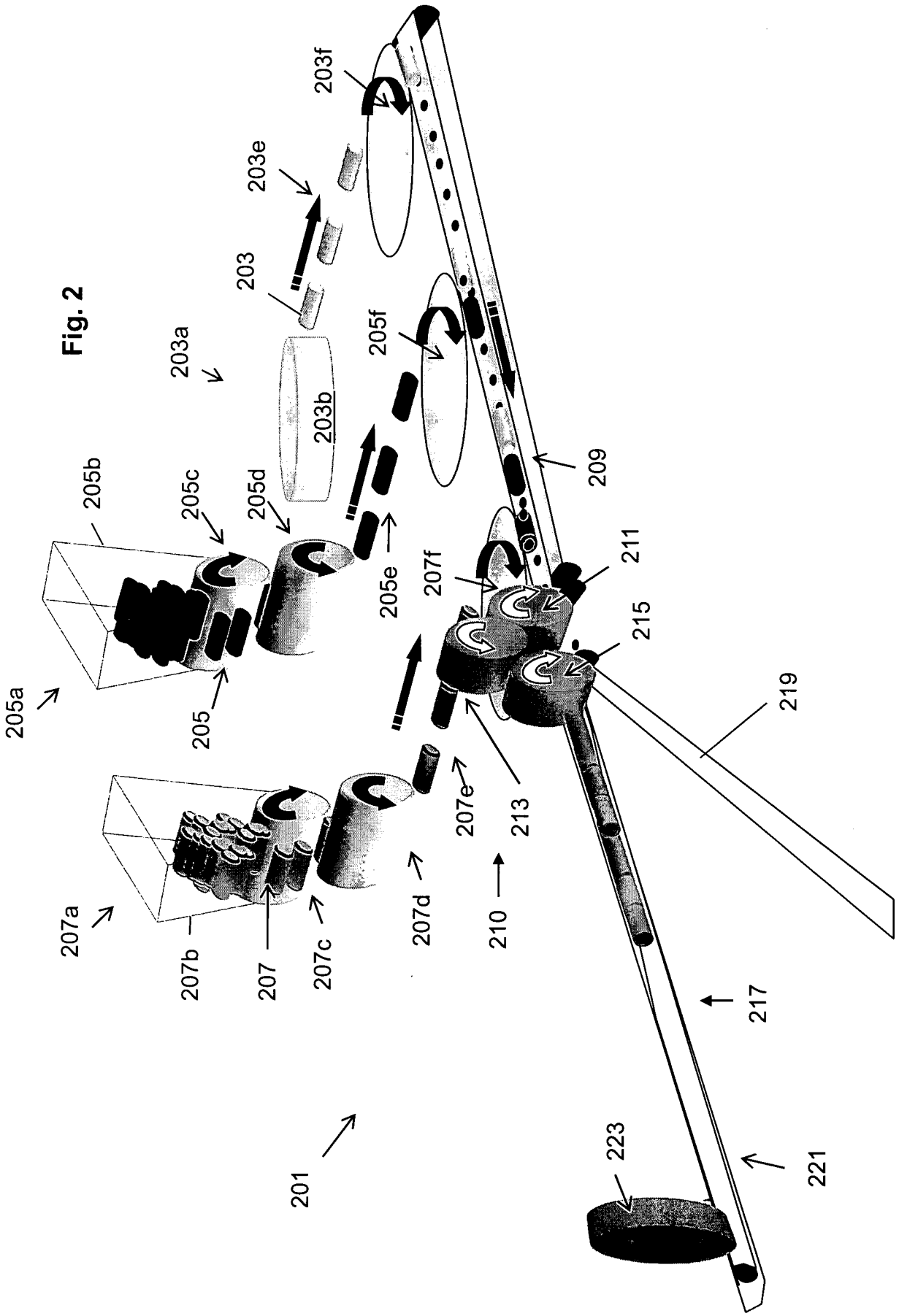
201
203
203a
203b
203e
203f
205
205a
205b
205c
205d
205e
205f
207
207a
207b
207c
207d
207e
207f
209
210
211
213
215
217
219
221
223

Fig. 3

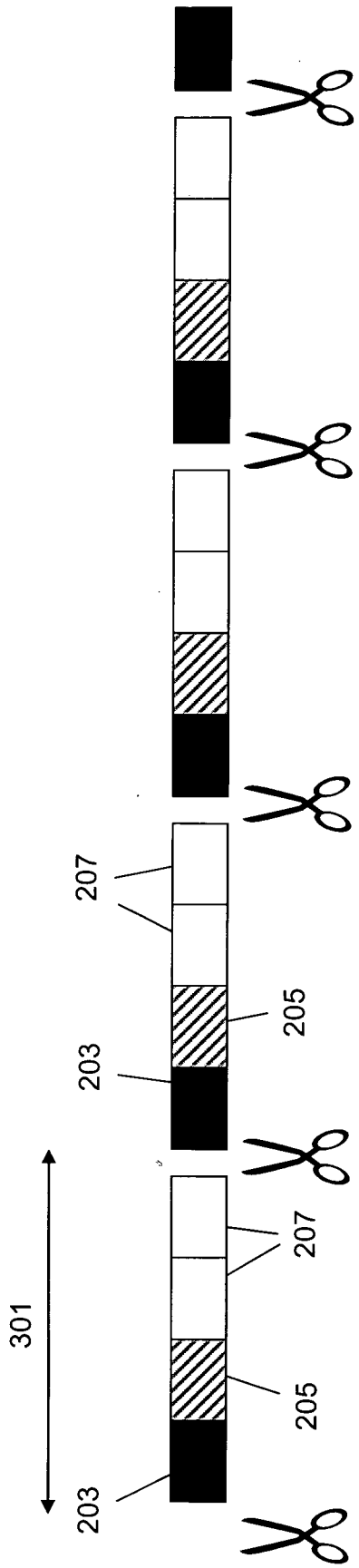

Fig. 4

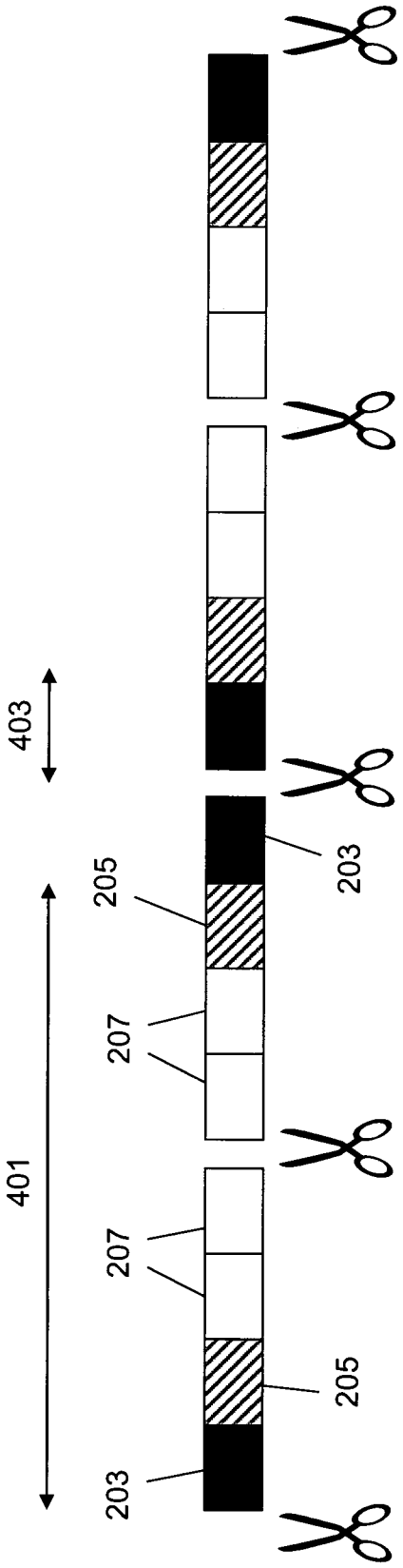

Fig. 5

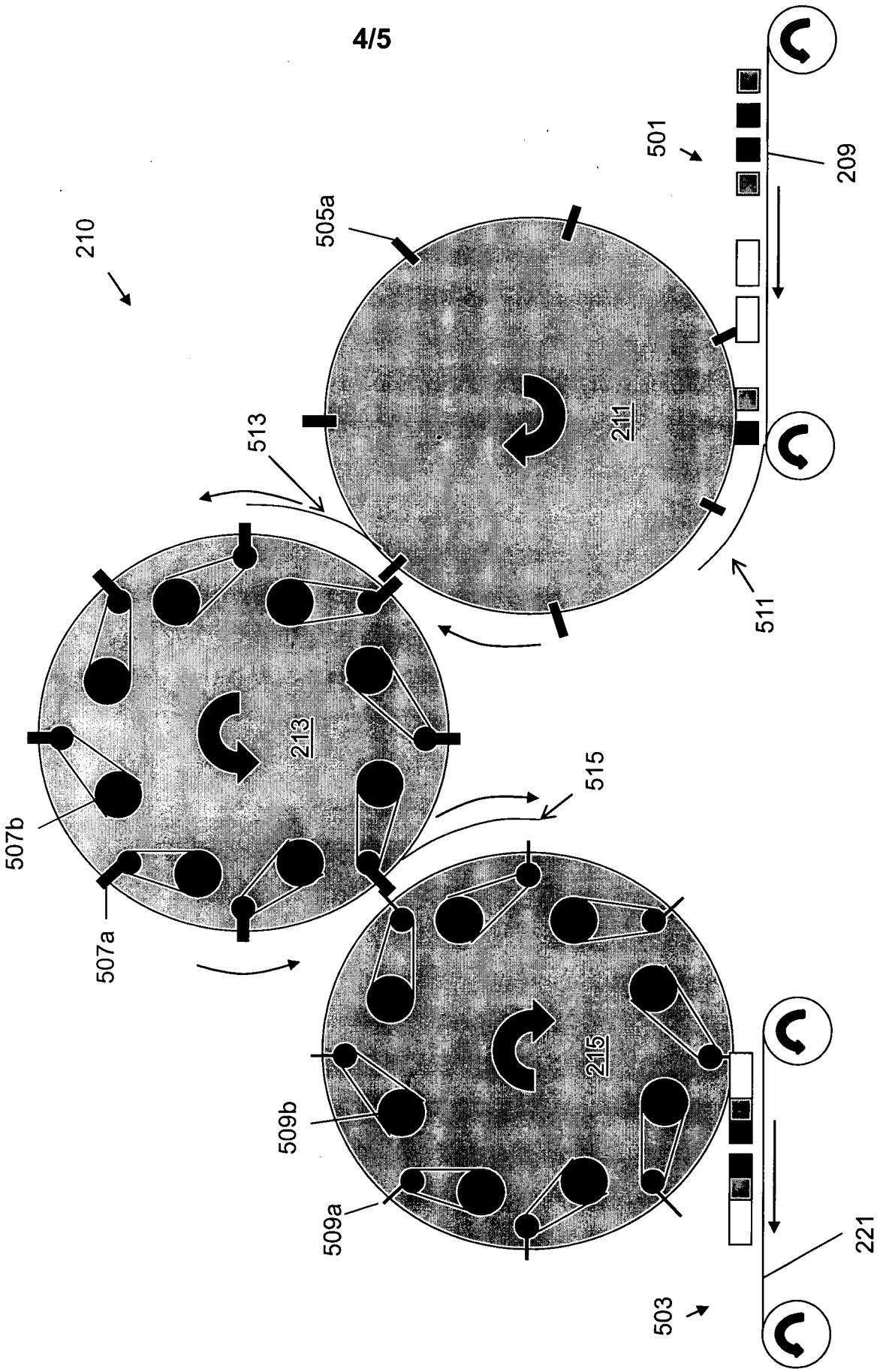
210
501
209
505a
513
211
511
213
515
507b
507a
509b
215
509a
221
503

Fig. 6

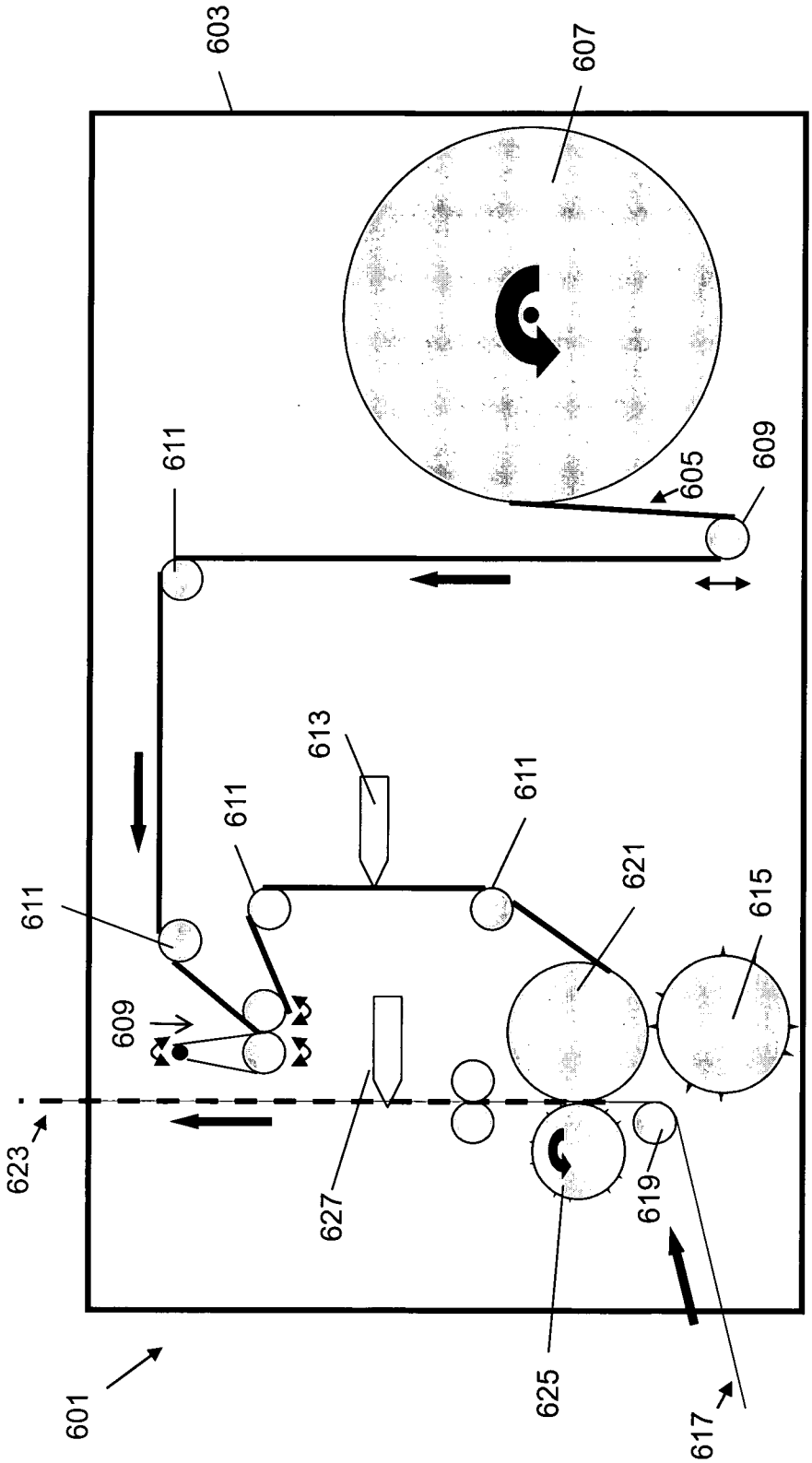
603
607
611
605
609
611
613
611
611
621
615
609
623
627
619
625
601
617

INTERNATIONAL SEARCH REPORT

International application No
PCT/IB2009/007953

A. CLASSIFICATION OF SUBJECT MATTER
INV. A24F47/00 A24D3/02

According to International Patent Classification (IPC) or to both national classification and IPC

B. FIELDS SEARCHED

Minimum documentation searched (classification system followed by classification symbols)
A24F A24D

Documentation searched other than minimum documentation to the extent that such documents are included in the fields searched

Electronic data base consulted during the international search (name of data base and, where practical, search terms used)
EPO-Internal

C. DOCUMENTS CONSIDERED TO BE RELEVANT

Category*	Citation of document, with indication, where appropriate, of the relevant passages	Relevant to claim No.
A	US 5 819 751 A (BARNES VERNON BRENT [US] ET AL) 13 October 1998 (1998-10-13) cited in the application column 6, line 39 - column 11, line 16; figures 2A,2B,2C	1-15
A	US 4 714 082 A (BANERJEE CHANDRA K [US] ET AL) 22 December 1987 (1987-12-22) cited in the application column 6, line 49 - column 20, line 55; figures 1-9B	1-15
A	US 5 666 976 A (ADAMS JOHN M [US] ET AL) 16 September 1997 (1997-09-16) column 8, line 39 - column 12, line 27; figures 4-7A	1-15

-/--

[X] Further documents are listed in the continuation of Box C.

[X] See patent family annex.

* Special categories of cited documents :

"A" document defining the general state of the art which is not considered to be of particular relevance

"E" earlier document but published on or after the international filing date

"L" document which may throw doubts on priority claim(s) or which is cited to establish the publication date of another citation or other special reason (as specified)

"O" document referring to an oral disclosure, use, exhibition or other means

"P" document published prior to the international filing date but later than the priority date claimed

"T" later document published after the international filing date or priority date and not in conflict with the application but cited to understand the principle or theory underlying the invention

"X" document of particular relevance; the claimed invention cannot be considered novel or cannot be considered to involve an inventive step when the document is taken alone

"Y" document of particular relevance; the claimed invention cannot be considered to involve an inventive step when the document is combined with one or more other such documents, such combination being obvious to a person skilled in the art.

"&" document member of the same patent family

Date of the actual completion of the international search	Date of mailing of the international search report
2 March 2010	12/03/2010

Name and mailing address of the ISA/	Authorized officer
European Patent Office, P.B. 5818 Patentlaan 2 NL – 2280 HV Rijswijk Tel. (+31-70) 340-2040, Fax: (+31-70) 340-3016	Maier, Michael

Form PCT/ISA/210 (second sheet) (April 2005)

INTERNATIONAL SEARCH REPORT

International application No
PCT/IB2009/007953

C(Continuation). DOCUMENTS CONSIDERED TO BE RELEVANT

Category*	Citation of document, with indication, where appropriate, of the relevant passages	Relevant to claim No.
A	EP 0 395 280 A (PHILIP MORRIS [US]) 31 October 1990 (1990-10-31) column 4, line 38 - column 11, line 34; figures 1-19	1-15

Form PCT/ISA/210 (continuation of second sheet) (April 2005)

INTERNATIONAL SEARCH REPORT

Information on patent family members

International application No
PCT/IB2009/007953

Patent document cited in search report	Publication date	Patent family member(s)	Publication date
US 5819751 A	13-10-1998	AT 178462 T	15-04-1999
		AU 669728 B2	20-06-1996
		AU 4615593 A	24-03-1994
		CA 2106321 A1	18-03-1994
		CN 1086407 A	11-05-1994
		DE 69324320 D1	12-05-1999
		DE 69324320 T2	04-11-1999
		DK 589298 T3	18-10-1999
		EP 0589298 A1	30-03-1994
		ES 2129475 T3	16-06-1999
		FI 934074 A	18-03-1994
		GR 3030416 T3	30-09-1999
		HU 3808 A1	30-06-1997
		JP 3422824 B2	30-06-2003
		JP 6189733 A	12-07-1994
		NO 933310 A	18-03-1994
		PH 30698 A	16-09-1997
		PL 173778 B1	30-04-1998
		RU 2109468 C1	27-04-1998
US 4714082 A	22-12-1987	BG 46304 A3	15-11-1989
		CA 1305387 C	21-07-1992
		CS 8506507 A2	14-08-1990
		DD 285926 A5	10-01-1991
		DD 295080 A5	24-10-1991
		DD 295081 A5	24-10-1991
		HU 202390 B	28-03-1991
		IN 164739 A1	20-05-1989
		JP 1681670 C	31-07-1992
		JP 3045658 B	11-07-1991
		JP 61092558 A	10-05-1986
		LT 2093 R3	15-07-1993
		LT 2059 R3	15-06-1993
		LT 2060 R3	15-06-1993
		LV 5374 A3	10-03-1994
		LV 5375 A3	10-03-1994
		LV 5376 A3	10-03-1994
		MN 430 A8	15-06-1989
		MW 2785 A1	08-10-1986
		PH 24137 A	22-03-1990
		SU 1575929 A3	30-06-1990
		SU 1595329 A3	23-09-1990
		SU 1658809 A3	23-06-1991
		TR 24464 A	10-10-1991
		US 5076292 A	31-12-1991
		US 4793365 A	27-12-1988
US 4714082 A		ZA 8506484 A	30-04-1986
		ZM 6285 A1	23-01-1986
US 5666976 A	16-09-1997	NONE	
EP 0395280 A	31-10-1990	AU 2635092 A	10-12-1992
		AU 2635192 A	10-12-1992
		AU 632115 B2	17-12-1992
		AU 5392890 A	01-11-1990
		BR 9001948 A	30-07-1991
		CN 1046664 A	07-11-1990

INTERNATIONAL SEARCH REPORT

Information on patent family members

International application No
PCT/IB2009/007953

Patent document cited in search report	Publication date	Patent family member(s)	Publication date
		JP 3007569 A	14-01-1991
		US 5024242 A	18-06-1991