(19) Europäisches Patentamt
European Patent Office
Office européen des brevets

(11) Publication number : **0 561 579 A2**

(12) EUROPEAN PATENT APPLICATION

(21) Application number : **93301925.9**

(51) Int. Cl.[5] : **G07F 9/06**

(22) Date of filing : **15.03.93**

(30) Priority : **19.03.92 JP 23182/92**

(43) Date of publication of application :
22.09.93 Bulletin 93/38

(84) Designated Contracting States :
GB IT

(71) Applicant : **TAMURA ELECTRIC WORKS, LTD.**
2-3, Shimomeguro 2-chome
Meguro-ku Tokyo (JP)

(72) Inventor : **Haraguchi, Kiyomitsu, c/o Tamura Elec. Works, Ltd.**
2-3 Shimomeguro 2-chome
Meguro-ku, Tokyo (JP)
Inventor : **Inagaki, Toshio, c/o Tamura Elec. Works, Ltd.**
2-3 Shimomeguro 2-chome
Meguro-ku, Tokyo (JP)
Inventor : **Morihisa, Toshiharu, c/o Tamura Elec. Works, Ltd.**
2-3 Shimomeguro 2-chome
Meguro-ku, Tokyo (JP)

(74) Representative : **Wood, Anthony Charles**
Urquhart-Dykes & Lord 91 Wimpole Street
London W1M 8AH (GB)

(54) Coin box structure.

(57) A coin box structure includes a coin box including a box-like safe main body and a lid, a safe chamber, a shielding plate, a lock member, an actuating portion, and an actuating rod. The shielding plate has an engaging pawl and an engaging portion, is swingably supported in the lid, and is biased in a direction to shield a storage window. The lock member has an engaging protrusion and a lock pawl engaged with the engaging pawl of the shielding plate returning to a biasing direction in unloading a safe from the safe chamber to hold the shielding plate in a shielding state, and has a swinging position reversible by a tumbler mechanism. The actuating portion is brought into contact with the engaging protrusion of the lock member during sliding movement of the lid to swing the lock member and disengage the lock pawl from the engaging pawl of the shielding plate, thereby obtaining a preset state. The actuating rod swings the shielding plate against a biasing force in loading the coin box from the insertion port of the safe chamber to open the storage window and reversely swings the lock member upon engagement with the engaging portion of the shielding plate to return the lock pawl to a position at which the lock pawl is engageable with the engaging pawl of the shielding plate.

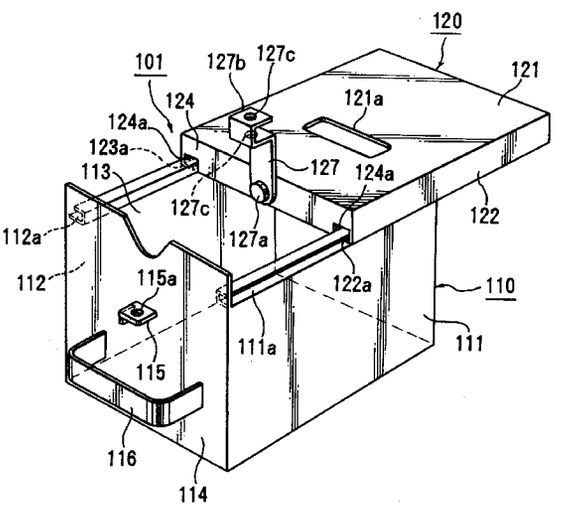

FIG.1

EP 0 561 579 A2

Background of the Invention

The present invention relates to a coin box structure of a vending machine or pay phone.

A coin box structure of this type generally comprise a box-like safe main body having an opening in an upper surface thereof, a lid, having a storage window in an upper surface thereof to store a coin, for opening/closing the opening of the safe main body, and a safe chamber having an opening for receiving the safe main body and a drop window formed at an upper end thereof and corresponding to the storage window to cause the coin to drop. The lid has a shielding plate for opening/closing the storage window and a lock mechanism for locking the shielding plate. When the safe main body is loaded in the safe chamber, the shielding plate opens the storage window to allow storage of the coin. However, when the safe main body is unloaded from the safe chamber, the lock mechanism automatically locks the lid to hold the storage window shielding state of the shielding plate, thereby preventing illegal removal of the coin from the storage window. When the lid is unlocked to remove the lid from the safe main body, the lock mechanism is automatically released. The shielding plate swings to open the storage window, i.e., a preset state is set, to prepare for loading the safe main body again in the safe chamber.

A coin box having this structure is disclosed in Japanese Utility Model Publication No. 53-14233. The disclosed coin box includes a shutter plate 22, an actuating plate 25, a press plate 29, a lock plate 36, an auxiliary lock lever 39, and an L-shaped lever 32 on a lid base 20. The shutter plate 22 has a window 22a and can be pivoted about a shaft 23 to open/close a coin storage port 21. The actuating plate 25 is pivoted about a shaft 24 to actuate the shutter plate 22. The press plate 29 is fixed to the apparatus main body to press the actuating plate 22 when the coin box is inserted into the apparatus main body. The lock plate 36 locks the shutter plate 22 when the lock plate 36 is pivoted about a shaft 35 and the window 22a overlaps the coin storage port 21. The auxiliary lock lever 39 is pivoted about a shaft 38 to actuate the lock plate 36. The L-shaped lever 32 is pivoted about a shaft 31 extending on the actuating plate 25 and cooperates with the press plate 29 in coin box removal to return the shutter plate 22 and the actuating plate 25 to a reset state shown in Fig. 7. When the lock plate 36 for locking the shutter plate 22 is to open the lid base 20, a protruding cam portion 39' of the auxiliary lock lever 39 is engaged with a protrusion formed on the coin box main body to cause the auxiliary lock lever 39 to actuate the lock plate 36. The shutter plate 22 is pivoted from the state shown in Fig. 7 clockwise through the fixed fulcrum, thereby obtaining the preset state.

In the conventional coin box structure described above, since a vertical operation for opening the lid base 20 is converted into a horizontal operation by the cam portion 39', an excessive force acts on the shaft 38 of the auxiliary lock lever 39 every time the lid base 20 is opened, and the mechanism tends to be damaged. The number of constituent members, e.g., the auxiliary lock lever 39, the actuating plate 25, and the L-shaped lever 32, for actuating the lock plate 36 and the shutter plate 22 is large, resulting in a complicated construction. In addition, since the lid base 20 is pivoted on the coin box main body and supported to be opened/closed, the lid base 20 is easily damaged, and coins are stolen.

Summary of the Invention

The present invention, therefore, has been made in consideration of the conventional drawbacks described above, and has as its object to provide a coin box structure in which a simple structure is obtained, an excessive force is prevented from acting on the constituent members to minimize the failure, and a rigid structure is obtained to prevent coins from being stolen.

In order to achieve the above object of the present invention, there is provided a coin box structure comprising a coin box including a box-like safe main body having an opening in an upper surface thereof and a lid slidable to open/close the opening of the safe main body, the lid having a storage window, formed in an upper surface thereof, for storing a coin, a safe chamber having an insertion port for loading the coin box and a drop window, formed in an upper surface thereof, for causing the coin to drop at a position corresponding to the storage window, a shielding plate having an engaging pawl and an engaging portion, swingably supported in the lid, and biased in a direction to shield the storage window, a lock member, disposed in the lid, having an engaging protrusion and a lock pawl engaged with the engaging pawl of the shielding plate returning to a biasing direction in unloading the safe from the safe chamber to hold the shielding plate in a shielding state, and having a swinging position reversible by a tumbler mechanism, an actuating portion, disposed in the safe main body and brought into contact with the engaging protrusion of the lock member during sliding movement of the lid to swing the lock member and disengage the lock pawl from the engaging pawl of the shielding plate, thereby obtaining a preset state, and an actuating rod, disposed in the safe chamber, for swinging the shielding plate against a biasing force in loading the coin box from the insertion port of the safe chamber to open the storage window and for reversely swinging the lock member upon engagement with the engaging portion of the shielding plate to return the lock pawl to a position at which the lock pawl is engageable with the engaging pawl of the shielding plate.

According to the present invention, the engaging

protrusion is formed on the lock member having the lock pawl engaged with the engaging pawl of the shielding plate to maintain the storage window shielding state, and the actuating portion engaged with the engaging protrusion is formed in the safe chamber. When the lid is slid to open, the engaging protrusion of the safe main body is engaged with the engaging protrusion of the lid to swing the lock member, thereby disengaging the lock pawl from the engaging protrusion of the shielding plate, thereby obtaining the preset state.

Brief Description of the Drawings

Fig. 1 is a perspective view showing the overall structure of a coin box showing an embodiment of the coin box structure according to the present invention;

Fig. 2 is a cross-sectional view of a lid showing the embodiment of the coin box structure according to the present invention;

Fig. 3 is a perspective view of a safe chamber showing the embodiment of the coin box structure according to the present invention;

Figs. 4A and 4B are cross-sectional views showing the lid for explaining an operation for loading the coin box in Fig. 1 into the safe chamber in Fig. 3;

Figs. 5A and 5B are cross-sectional views showing an operation for unloading the coin box in Fig. 1 from the safe chamber in Fig. 3;

Figs. 6A and 6B are cross-sectional views of the lid for explaining an operation for performing coin recovery and obtaining a preset state; and

Fig. 7 is a view for explaining the structure of a conventional coin box.

Description of the Preferred Embodiment

An embodiment of the present invention will be described with reference to the accompanying drawings. Fig. 1 shows the overall structure of a coin box showing a coin box structure according to the present invention, Fig. 2 shows a lid of the coin box, and Fig. 3 shows a safe chamber of the coin box.

Referring to Figs. 1 to 3, a coin box 101 comprises a coin box main body 110 and a lid 120 for sliding the opening in the upper surface of the coin box main body 110 to open/close the opening. The coin box main body 110 has an opening 113 in the upper surface thereof. Guide rails 111a and 112a each having a U-shaped cross-section are formed at upper edges of both side plates 111 and 112, respectively. An actuating piece 111b is fixed on the inner surface of the right side plate 111 behind the terminal end of the guide rail 111a, as shown in Fig. 2. A lock piece 115 having a lock hole 115a is formed at the central portion of a front plate 114, and a U-shaped handle 116 is fixed below the lock piece 115.

The lid 120 comprises an upper plate 121, two side plates 122 and 123, a front plate 124, and a rear plate 125. A rectangular storage window 121a is formed almost at the center of the upper plate 121 to store a coin. Guide pieces 122a and 123a bend inwardly are formed at the lower end portions of the side plates 122 and 123. A pair of rectangular holes 124a are formed in both end portions of the front plate 124. A lock lever 127 having a U-shaped hook 127b at the distal end thereof is formed at the central portion of the front plate 124 to be pivotal about a pin 127a. The U-shaped hook 127b has a lock hole 127c. A slit-like insertion port 125a is formed at the center of the rear plate 125.

The guide pieces 122a and 123a are fitted in the guide rails 111a and 112a from the holes 124a in the lid 120, and the upper surface portion of the safe main body 110 can be slidable back and forth so as to open/close the opening 113. When the lid 120 is kept closed, the lock lever 127 is pivoted downward about the pin 127a to engage the hook 127b with the lock piece 115, thereby closing the lock holes 115a and 127c with a lock closing tool 118. As a result, the lid 120 is locked to the safe main body 110.

A shielding plate 129 and a lock lever 132 are disposed at both corners on the safe insertion side in the lid 120, as shown in Fig. 3. The shielding plate 129 is supported to swing about a pin 130 and is biased counterclockwise by a leaf spring 131. A rectangular coin storage open window 129a is inclined at the central portion of the lid 120, and a groove 129b corresponding to the insertion port 125a is formed at the center of the lid 120 on the safe insertion side. An engaging pawl 129c and an engaging portion 129d constitute a notched portion so as to surround the lock lever 132 located at the other corner.

A lock pawl 132b engaged with the engaging pawl 129c and an engaging protrusion 132c engaged with the actuating piece 111b are formed in the lock lever 132. The lock lever 132 is supported to swing about a pin 132a extending on a cover 133 of the lock lever 132. A pin 132d integrally formed with the lock lever 132 is fitted in a sector-shaped elongated hole 133a formed in the cover 133 and is slid along the elongated hole 133a. Therefore, the lock lever 132 swings within the range of the elongated hole 133a.

A coin spring 134 is hooked between the pin 132d of the lock lever 132 and a pin 134a extending on the cover 133. This coin spring 134 serves as a tumbler mechanism acting on the lock lever 132.

More specifically, when an external force acts on the lock lever 132, and the pin 132d serving as a movable fulcrum of the spring 134 is located above a boundary line K connecting a pivot fulcrum (pin) 132a of the lock lever 132 and the pin 134a serving as a fixed fulcrum of the spring 134, the movable fulcrum (pin) 132d is biased to the upper end side of the elon-

gated hole 133a, thereby applying a counterclockwise biasing force to the lock lever 132 so as to pivot it about the pin 132a. On the other hand, the movable fulcrum 132d is located below the boundary line K, the movable fulcrum 132d is biased toward the lower end side of the elongated hole 133a, thereby applying the clockwise biasing force to the lock lever 132 so as to pivot about the pin 132a. As can be apparent from the above description, the lock lever 132 is swingable with respect to the boundary line K.

An opening (insertion port) 141a for loading the coin box 101 is formed in the front surface portion of a safe chamber 141, as shown in Fig. 3. A drop window 142 for storing a coin, dropping from a coin handling unit (not shown) disposed above the safe chamber 141, in the coin box 101 is formed in correspondence with the storage chamber 121a of the coin box 101. An actuating rod 143 having a pin 143 at the distal end thereof extends on the rear portion in correspondence with the insertion port 125a of the lid 120.

The coin box of the present invention has the above structure and is operated as follows.

An operation for storing a coin upon loading the coin box in the safe chamber will be mainly described with reference to Figs. 4A and 4B.

In the coin box 101 to be loaded in the safe chamber 141 for storing coins, the movable fulcrum 132d of the lock lever 132 is located below the boundary line K in advance by a preset operation (to be described later). The lock pawl 132b is kept disengaged from the engaging pawl 129c, and locking of the shielding plate 129 by the lock lever 132 is released.

In this state, when the coin box 101 is loaded in the safe chamber 141, the pin 143a of the actuating rod 143 extending from the rear portion of the safe chamber 141 extends from the insertion port 125a of the coin box 101 into the lid 120, as shown in Fig. 4A. The pin 125a abuts against the stepped portion of the groove 129b of the shielding plate 129, so that the shielding plate 129 is pivoted clockwise about the pin 130 against the biasing force of the leaf spring 131.

At the same time, upon pivotal movement of the shielding plate 129, the engaging portion 129d of the shielding plate 129 is engaged with the movable fulcrum 132d of the lock lever 132, and the lock lever 132 tends to be pivoted counterclockwise about the pin 132a.

When the coin box 101 is completely loaded in the safe chamber 141, the coin storage open window 129a of the shielding plate 129 is located at the storage window 121a of the lid 120, as shown in Fig. 4B. At the same time, the storage window 121a is located at the drop window 142 of the safe chamber 141, so that the coin from the coin handling unit (not shown) can be stored in the coin box 101.

At this time, the movable fulcrum 132d of the lock lever 132 is located at the upper end portion of the elongated hole 133a through the boundary line K, so that the lock pawl 132b and the engaging protrusion 132c are located at the standby positions to be engaged with the engaging pawl 129c of the shielding plate 129 and the actuating piece 111b of the safe main body 110.

That is, the pin 143a of the actuating rod 143 is brought into direct contact with the groove 129b of the shielding plate 129 to pivot the shielding plate 129. Therefore, a complicated structure need not be used, and the number of constituent members can be greatly reduced.

An operation for removing the coin box from the safe chamber to recover the coins will be described mainly with reference to Figs. 5A and 5B and Figs. 6A and 6B.

When removal of the coin box 101 from the safe chamber 141 is started, the pin 143a of the actuating rod 143 kept extending in the lid 120 is retracted, and the shielding plate 129 starts pivoting counterclockwise about the pin 130 by the biasing force of the leaf spring 131. As shown in Fig. 5A, the engaging pawl 129c is brought into contact with the lock pawl 132b, and the lock lever 132 is pivoted clockwise about the pin 132a against the biasing force of the spring 134.

This pivot movement does not cause the movable fulcrum 132d to pass over the boundary line K. The pin 132d swings to pivot counterclockwise. When the coin box 101 is completely unloaded from the safe chamber 141, the lock pawl 132b is engaged with the engaging pawl 129c, as shown in Fig. 5B, so that the state of the shielding plate 129 which shields the storage window 121a is held.

The lock lever 127 and the lock piece 115 of the coin box 101 unloaded from the safe chamber 141 are released, the lid 120 is slid backward along the guide rails 111a and 112a, and the opening 113 of the safe main body 110 is open to recover the coins.

The above operation will be described in more detail below. As shown in Fig. 6A, upon sliding the lid 120 by an amount α, the engaging protrusion 132c of the lock lever 132 is engaged with the actuating piece 111b of the lid 120. The lock lever 132 is pivoted clockwise about the pin 132a against the biasing force of the spring 134. The movable fulcrum 132d is located below the boundary line K, and the lock lever 132 is swung to pivot in a reverse direction. As shown in Fig. 6B, when the lid 120 completely opens the opening 113, the engaging pawl 129c is disengaged from the lock pawl 132b, and the shielding plate 129 is swingable about the pin 130. Therefore, a state in which the shielding plate 129 is swingable by the pin 143a of the actuating rod 143 in loading the coin box 101 in the safe chamber 141, i.e., a preset state is obtained.

As described above, the lock member 132 is set swingable about the pin 132a thereof and is swung during slidable movement of the lid for coin recovery, thereby disengaging the engaging pawl 129c of the shielding plate 129 from the lock pawl 132b of the lock

member 132 to obtain the preset state. Therefore, the pivot movement of the lock member is performed on the same plane on which an external force acts on the lock member 132. Therefore, an unnecessary external force does not act on the lock member 132, and damage to the lock member 132 and its failure can be minimized.

As has been described above, according to the present invention, the lock member has the engaging protrusion and the lock pawl engaged with the engaging pawl of the shielding plate to hold the storage window shielding state of the shielding plate, and the swinging position of the lock member is reversed by the tumbler mechanism. When the lid is slid to open the safe main body, the actuating portion formed in the safe main body is engaged with the engaging protrusion of the lid to swingably reverse the lock member, so that the lock pawl is disengaged from the engaging protrusion of the shielding plate to obtain the preset state. An unnecessary force does not act on the lock member to obtain the preset state, thereby minimizing the failure. Since the shielding plate is swung by the actuating rod formed in the safe chamber against the swinging force to open the storage window in loading the safe main body in the safe chamber, the actuating rod is brought into direct contact with the shielding plate. For this reason, a complicated structure need not be used, and the number of constituent members can be greatly reduced. In addition, since the lid which can freely open the opening of the safe main body is slidable with respect to the opening of the safe main body, the lid is rigidly mounted on the safe main body. For this reason, the lid tends not to be damaged. Coins will not be stolen even if the coin box is illegally taken away.

Claims

1. A coin box structure characterized by comprising:

a coin box (101) including a box-like safe main body (110) having an opening (113) in an upper surface thereof and a lid (120) slidable to open/close the opening (113) of said safe main body (110), said lid having a storage window (121a), formed in an upper surface thereof, for storing a coin;

a safe chamber (141) having an insertion port (141a) for loading said coin box (101) and a drop window (142), formed in an upper surface thereof, for causing the coin to drop at a position corresponding to said storage window (121a);

a shielding plate (129) having an engaging pawl (129c) and an engaging portion (129d), swingably supported in said lid (120), and biased in a direction to shield the storage window (121a);

a lock member (132), disposed in said lid (120), having an engaging protrusion (132c) and a lock pawl (132b) engaged with said engaging pawl (129c) of said shielding plate (129) returning to a biasing direction in unloading said safe from said safe chamber (141) to hold said shielding plate (129) in a shielding state, and having a swinging position reversible by a tumbler mechanism (132d, 134, 134a);

an actuating portion (111b), disposed in said safe main body (110) and brought into contact with said engaging protrusion (132c) of said lock member (132) during sliding movement of said lid (120) to swing said lock member (132) and disengage said lock pawl (132b) from said engaging pawl (129c) of said shielding plate (129), thereby obtaining a preset state; and

an actuating rod (143), disposed in said safe chamber (141), for swinging said shielding plate (129) against a biasing force in loading said coin box (101) from the insertion port (141a) of said safe chamber (141) to open the storage window (121a) and for reversely swinging said lock member (132) upon engagement with said engaging portion (129d) of said shielding plate (129) to return said lock pawl (132b) to a position at which said lock pawl (132b) is engageable with said engaging pawl (129c) of said shielding plate (129).

2. A structure according to claim 1, wherein said shielding plate (129) has a groove (129b), and a first pin formed at a distal end of said actuating rod (143) is engaged with the groove (129b) in loading said coin box (101) from the insertion port (141a) of said safe chamber (141) to urge said shielding plate (129) to maintain an open state.

3. A structure according to claim 1, wherein said tumbler mechanism comprises a second pin (132d) extending on said lock member (132), a third pin (134a) extending in a direction perpendicular to said lid (120), and a coin spring (134) hooked between said second and third pins (132d, 134a), so that said lock member (132) is swung and biased in a direction away from a boundary line (K) in accordance with a position of said second pin (132d) serving as a movable fulcrum of said coin spring (134) with respect to the boundary line (K) connecting a pivot fulcrum (132a) of said lock member (132) and a fixed fulcrum of said coin spring (134).

4. A structure according to claim 3, further comprising a cover (133), parallel to part of said lid (120), having said third pin (134a) extending thereon, and having an elongated hole (133a) engaged with said second pin (132d), said second pin (132d) of said lock member (132) being moved

along the elongated hole (133a) of said cover (133) to define a swingable range of said lock member (132).

5. A structure according to claim 1, wherein said lock member (132) is located on one corner on a safe insertion side of said lid (120), and said shielding plate (129) is swingably supported on the other corner on the safe insertion side of said lid (120) and has a notch for storing said lock member (132) between said engaging pawl (129c) and said engaging portion (129d).

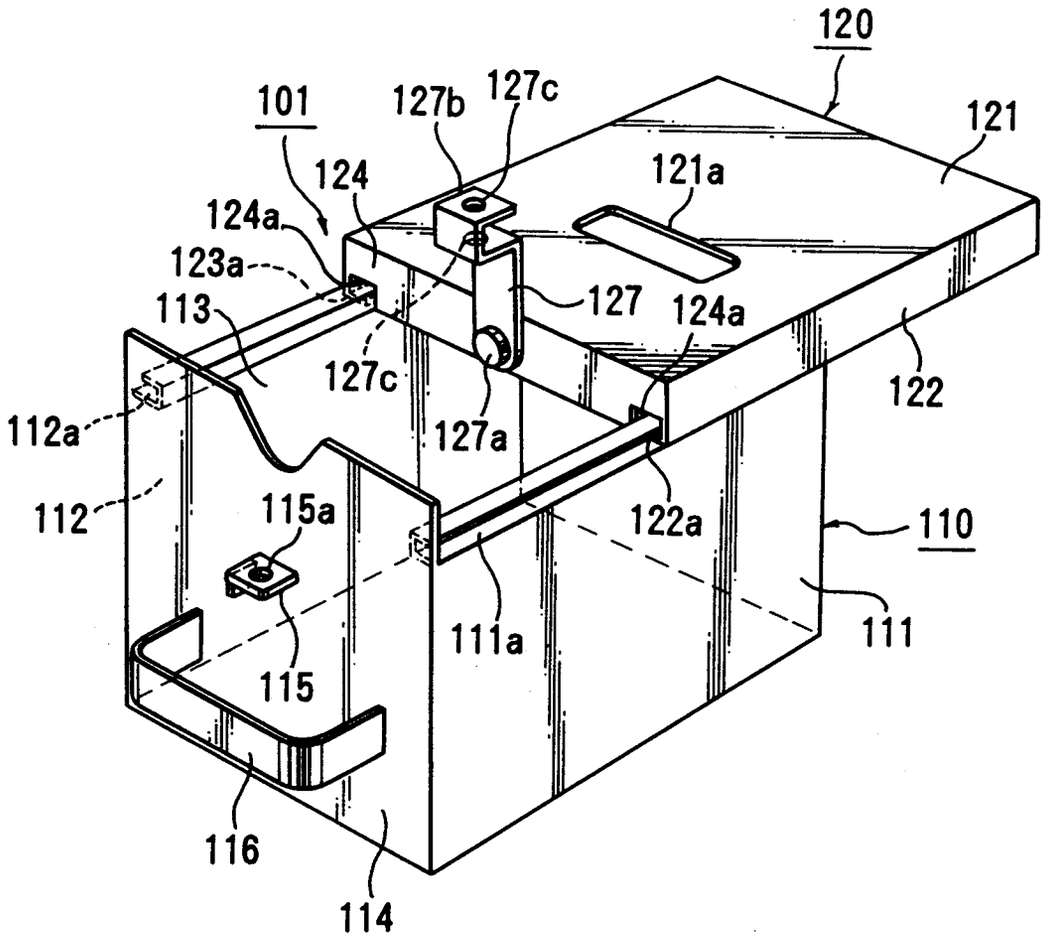
120
101
127b
127c
121
124
121a
124a
123a
127
124a
113
127c
122
112a
127a
112
115a
122a
110
111a
111
115
116
114

FIG.1

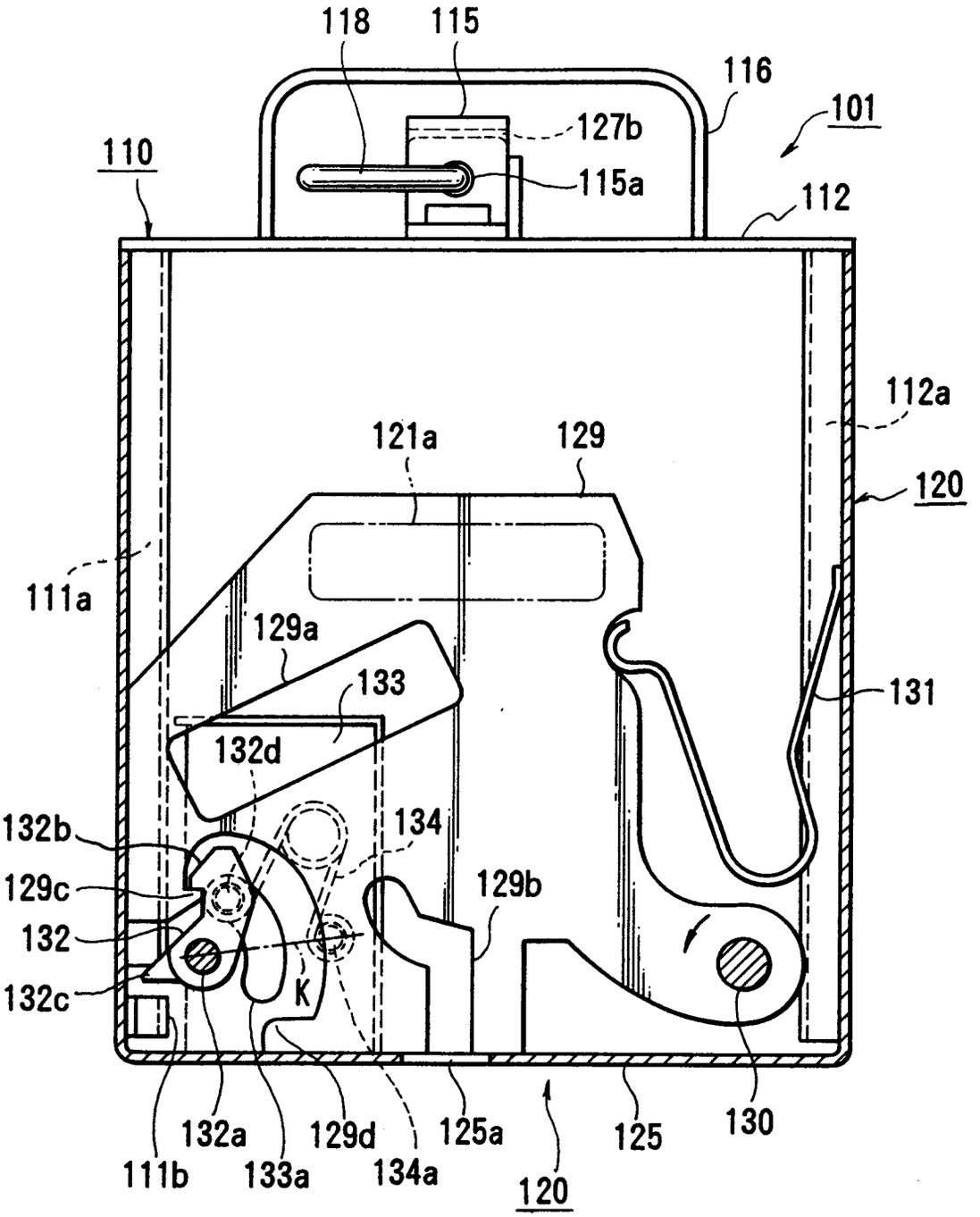
118
115
116
101
127b
110
115a
112
112a
121a
129
120
111a
129a
133
131
132d
132b
134
129c
129b
132
K
132c
132a
129d
125a
125
130
111b
133a
134a
120

FIG.2

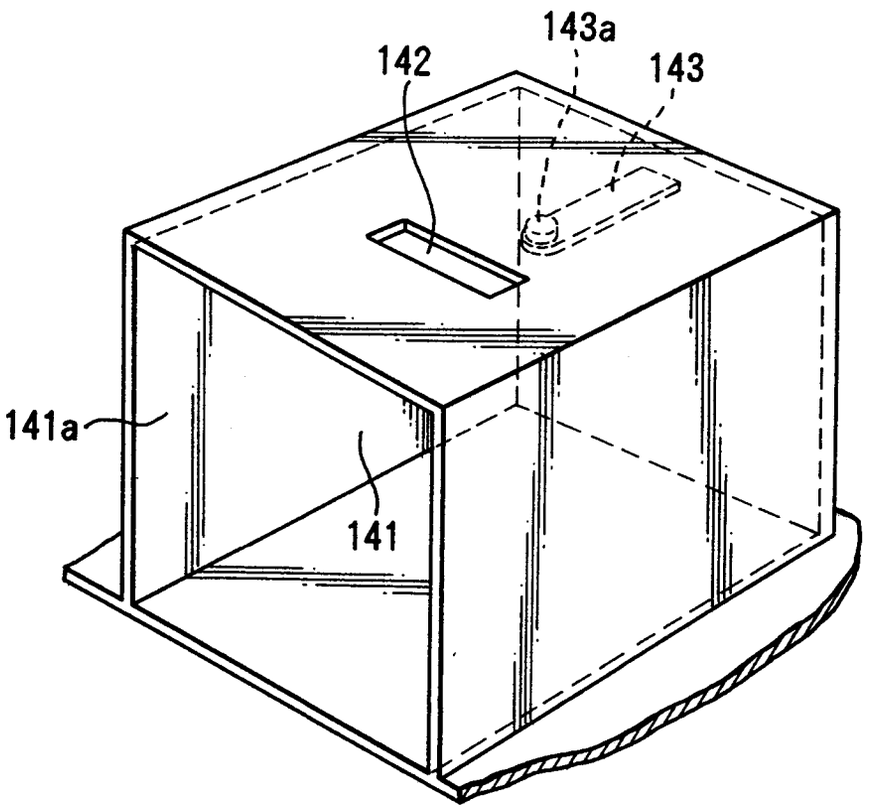

FIG.3

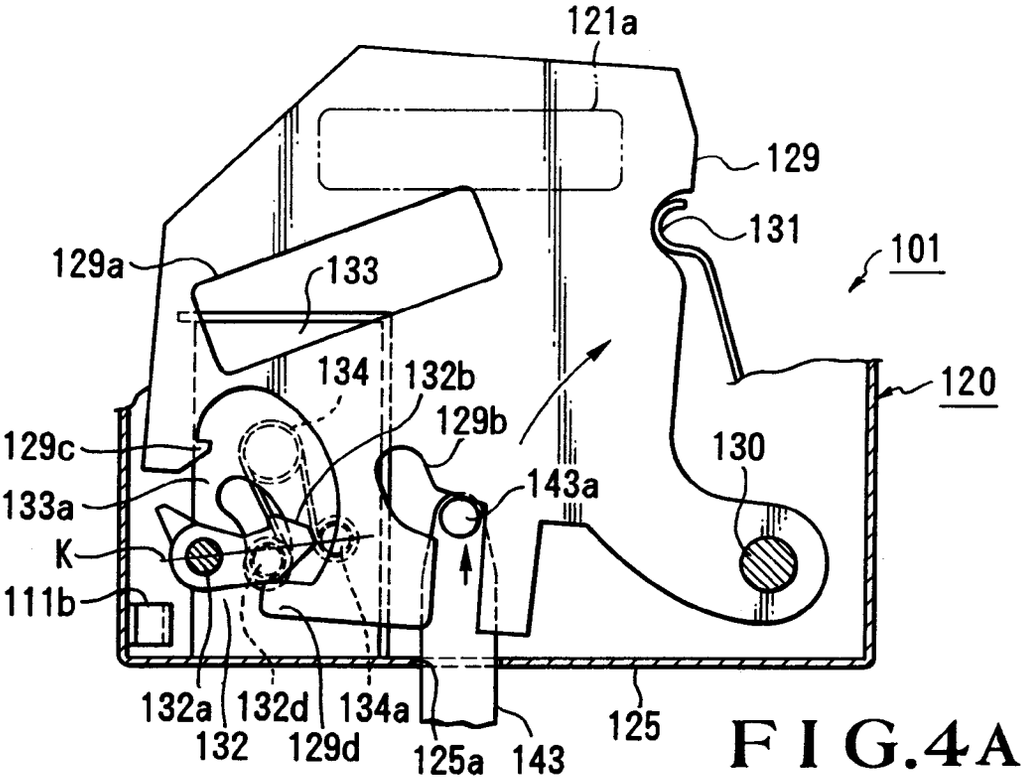
121a
129
131
101
129a
133
134
132b
129b
120
129c
130
133a
143a
K
111b
132a
132d
134a
132
129d
125a
143
125

FIG.4A

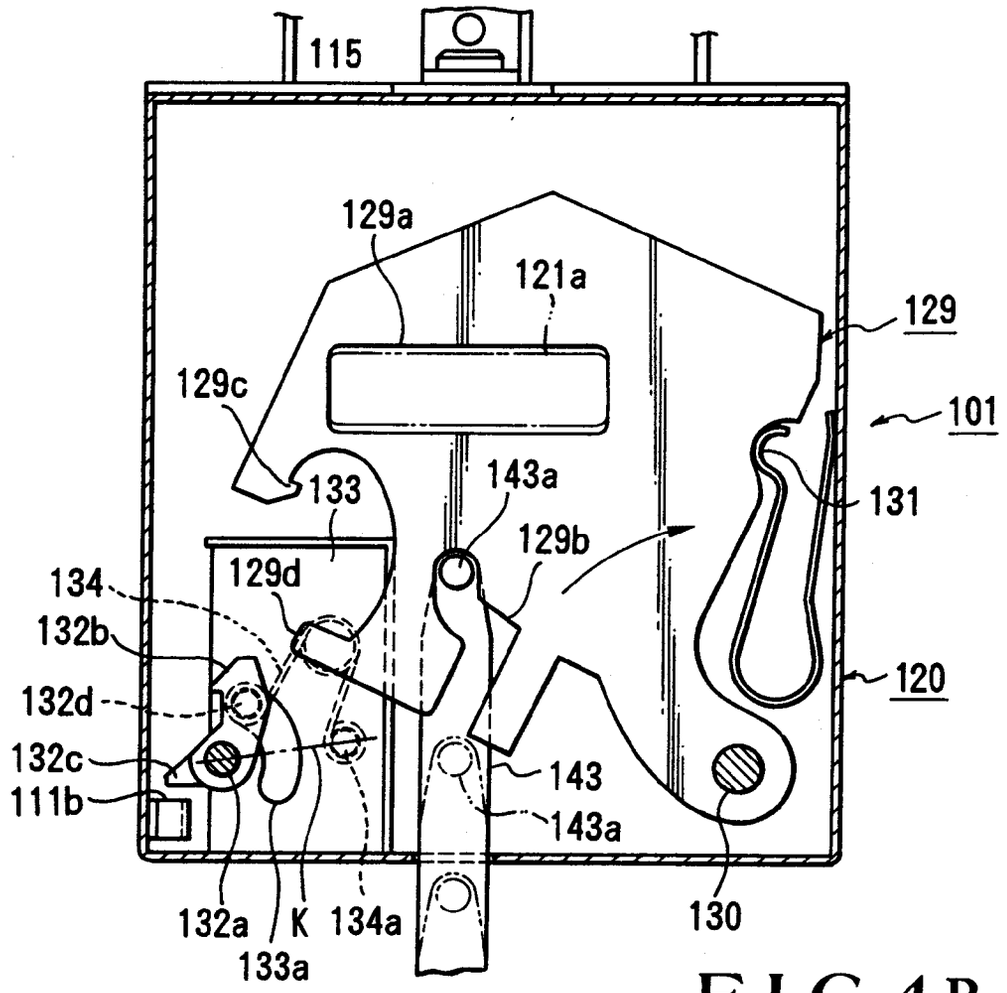
115
129a
121a
129
129c
101
133
143a
131
129b
129d
134
132b
120
132d
132c
143
111b
143a
132a
K
134a
130
133a

FIG.4B

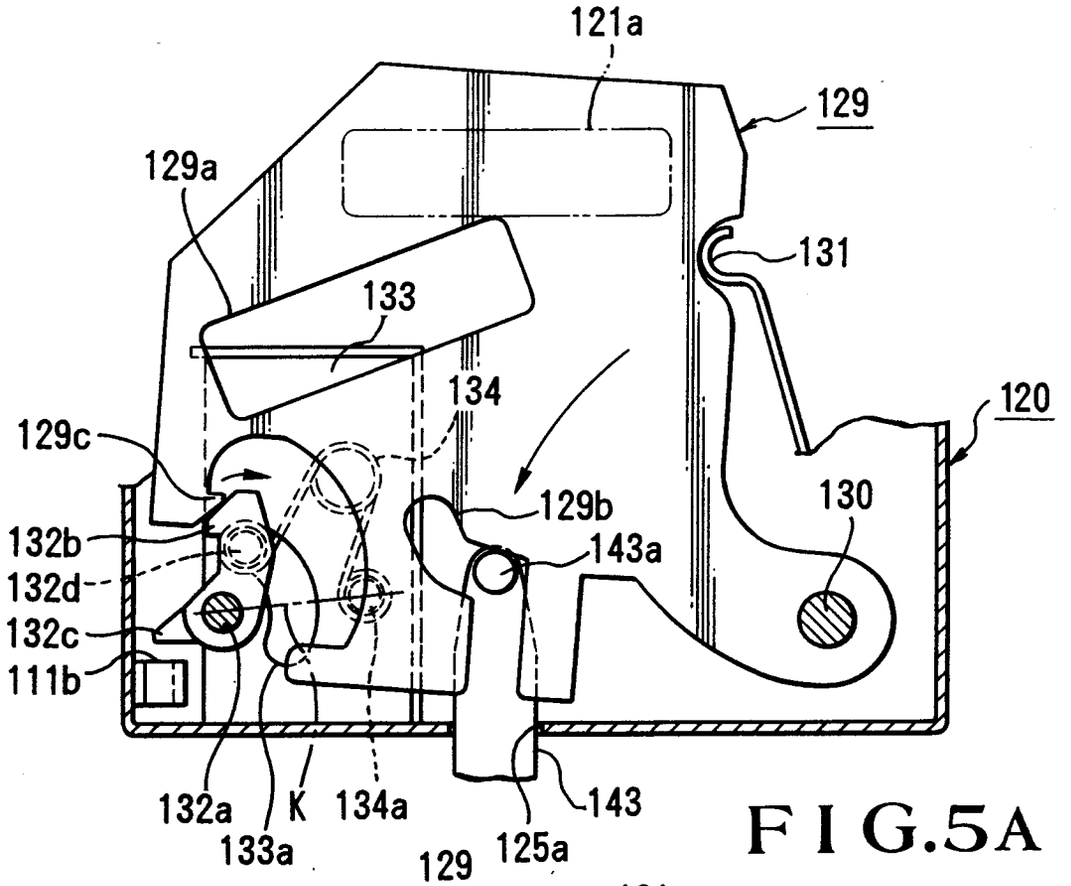
121a
129
129a
131
133
134
120
129c
129b
130
132b
143a
132d
132c
111b
132a
K
134a
143
133a
125a

FIG.5A

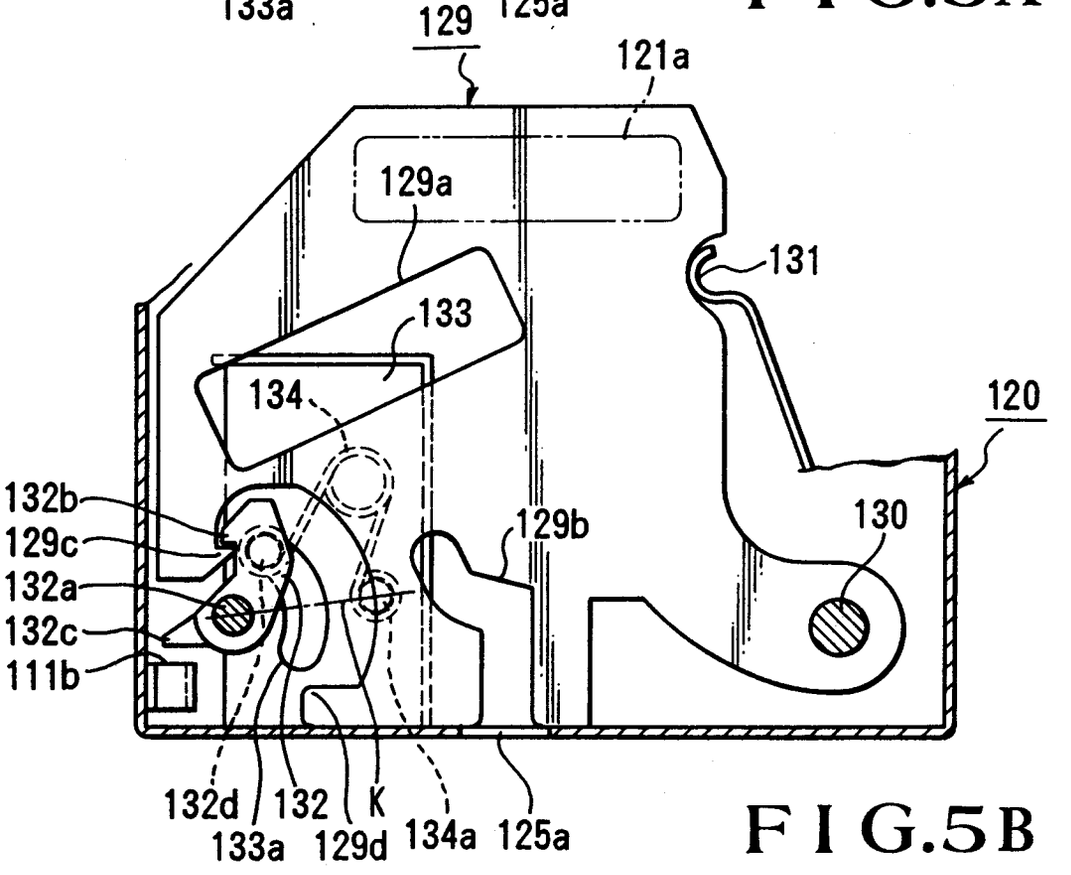
129
121a
129a
131
133
134
120
132b
129c
129b
130
132a
132c
111b
132d
132
K
133a
129d
134a
125a

FIG.5B

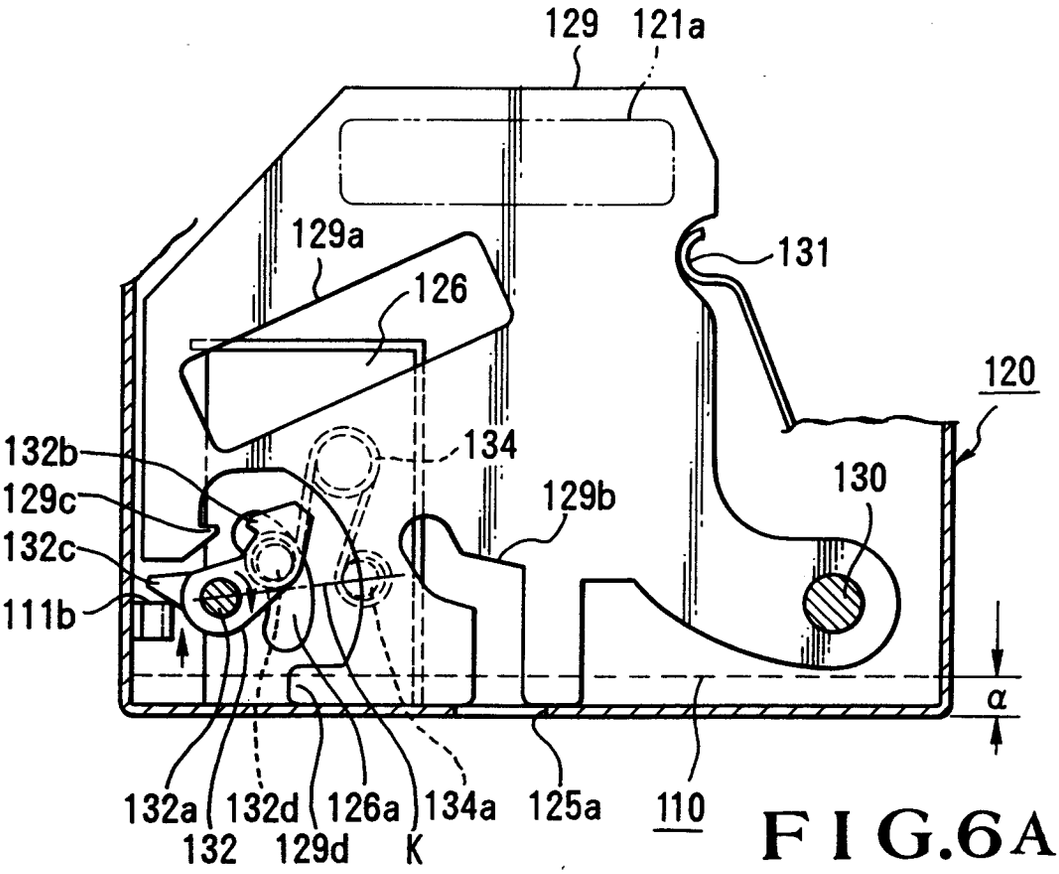
129
121a
129a
126
131
120
132b
129c
132c
111b
134
129b
130
α
132a
132
132d
129d
126a
K
134a
125a
110

FIG.6A

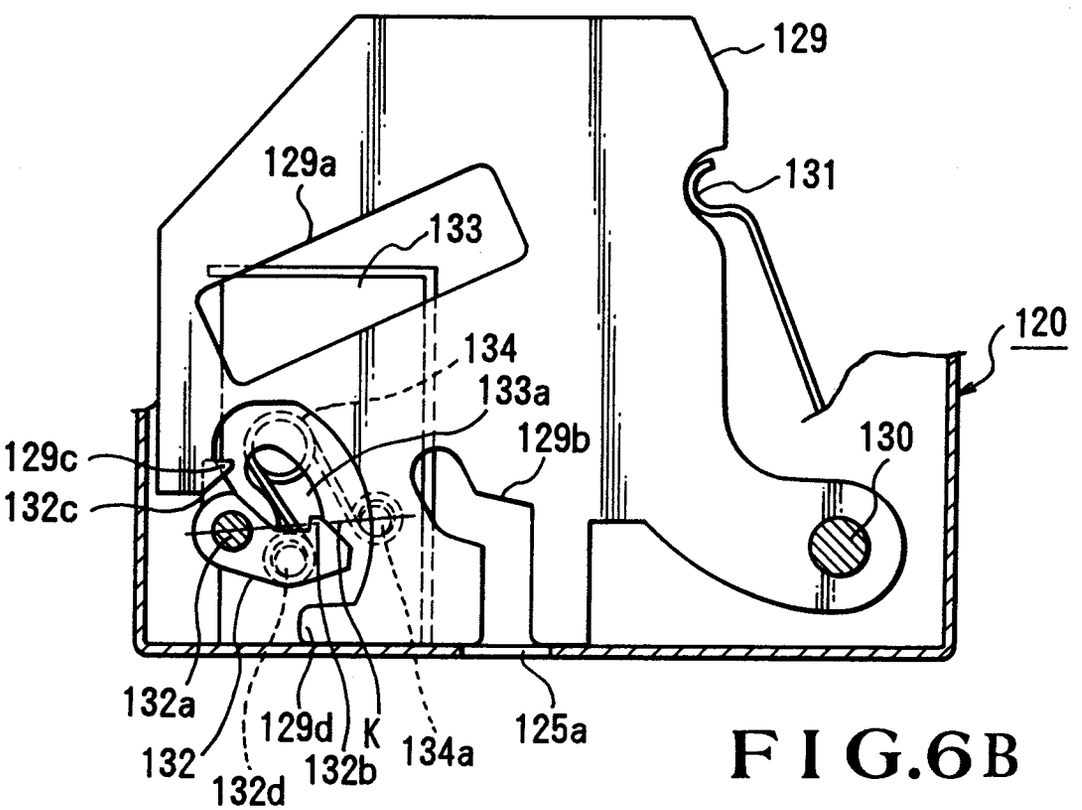
129
129a
131
133
120
134
133a
129b
130
129c
132c
132a
132
132d
129d
K
132b
134a
125a

FIG.6B

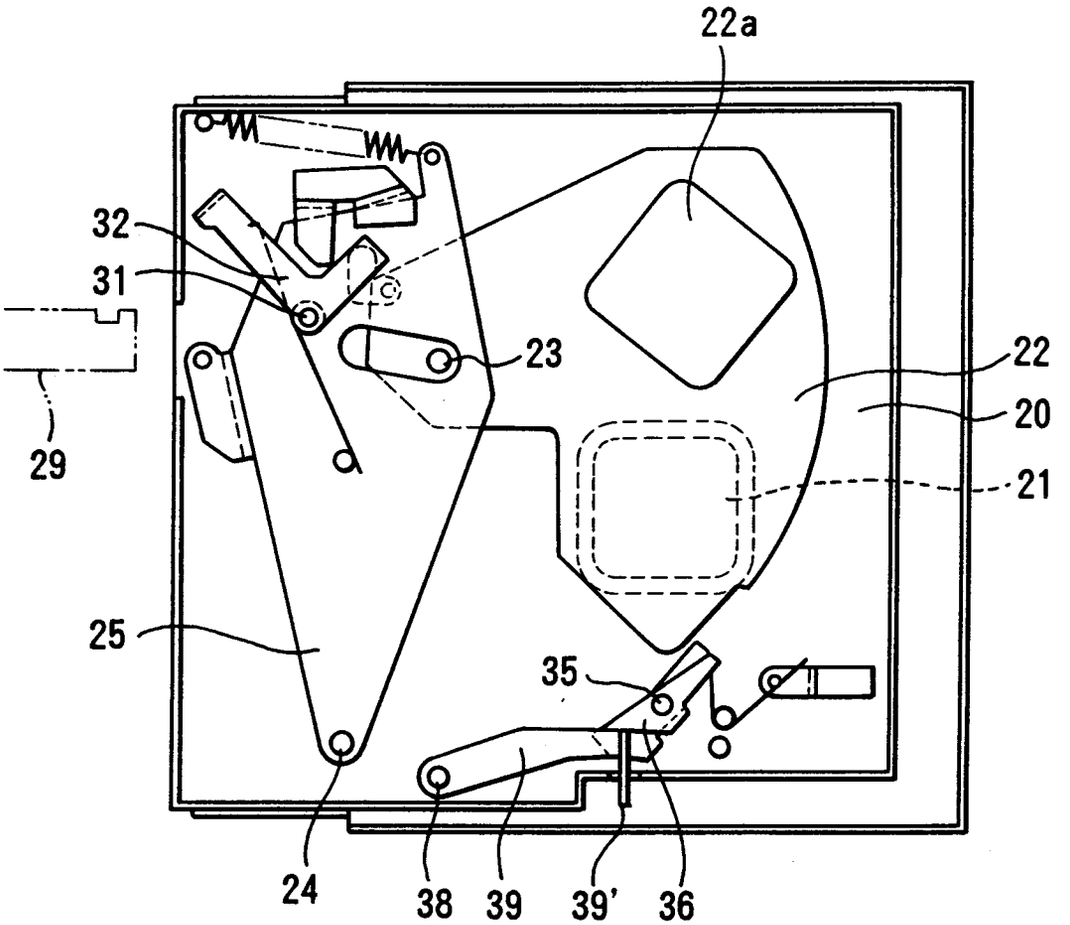

FIG.7
PRIOR ART