Nov. 22, 1949 E. K. STODOLA 2,488,567

ELECTRON TUBE POWER OUTPUT CIRCUIT
FOR LOW IMPEDANCE LOADS
Filed June 16, 1945

FIG. 1.

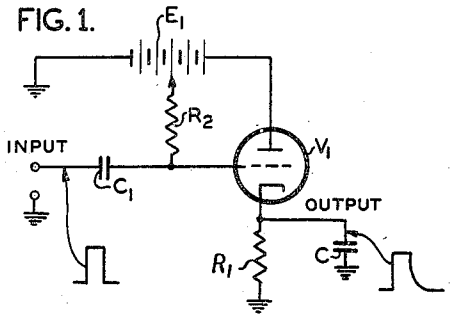

FIG. 2.

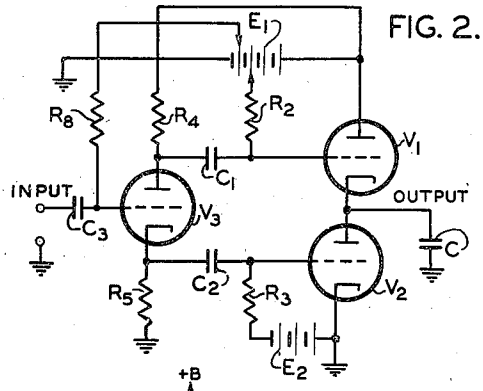

FIG. 3.

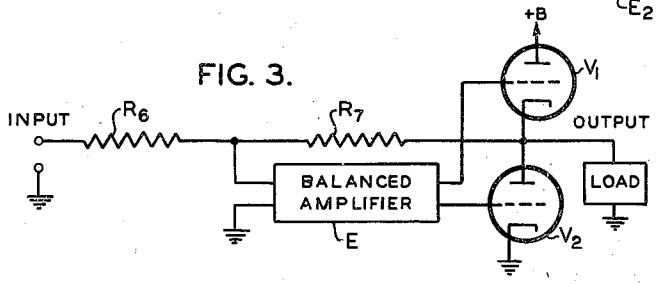

FIG. 4.

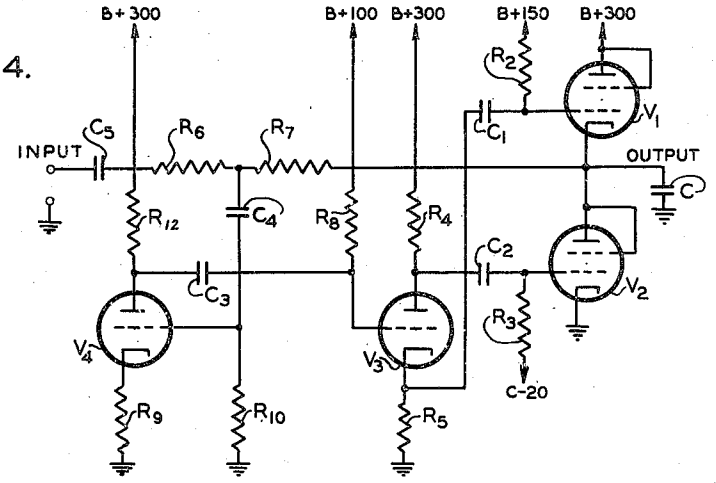

FIG. 5.

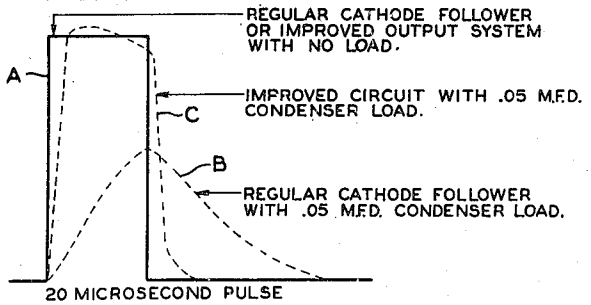

INVENTOR.
EDWIN K. STODOLA

BY
William D. Hall
ATTORNEY

Patented Nov. 22, 1949

2,488,567

UNITED STATES PATENT OFFICE

2,488,567

ELECTRON TUBE POWER OUTPUT CIRCUIT FOR LOW IMPEDANCE LOADS

Edwin K. Stodola, Neptune, N. J.

Application June 16, 1945, Serial No. 599,944

3 Claims. (Cl. 179—171)

(Granted under the act of March 3, 1883, as amended April 30, 1928; 370 O. G. 757)

1

The invention described herein may be manufactured and used by or for the Government for governmental purposes, without the payment to me of any royalty thereon.

My invention relates to electron tube networks and more particularly to networks for driving loads of low impedance. It is especially applicable for driving reactive loads in the form of large capacities.

One type of circuit to which my invention is especially applicable is the conventional cathode follower circuit, particularly when such a circuit is used for driving a reactive load such as a relatively high capacity which may be shunted by a high resistance, with a signal in the form of a sharp-sided pulse. In conventional circuits of this type, the positive-going edge of the pulse will be relatively sharply reproduced while the negative-going edge will be distorted.

It is a principal object of my invention to provide an electron tube network for driving such loads without the need for maintaining the large steady currents which are usually necessary for providing rapid response in the output circuit to changes in the input circuit.

It is a further object of my invention to provide an electron tube network for driving capacitative loads with relatively sharply varying signals with minimum distortion thereof.

The novel features of my invention are set forth in the appended claims, but the organization, operation, advantages, and further objects of my invention may best be understood by the following description taken in connection with the accompanying drawings, wherein similar components are indicated by like reference numerals, and wherein:

Figure 1 is a schematic circuit diagram of a conventional cathode follower circuit;

Figure 2 is a schematic circuit diagram of one embodiment of my invention;

Figure 3 is a block diagram of a further embodiment of my invention;

Figure 4 is a schematic circuit diagram corresponding to the block diagram of Fig. 3; and

Figure 5 is a typical oscillogram showing the improvement in performance which is obtained by the use of my invention.

Reference is now made to Fig. 1, which shows a conventional cathode follower circuit feeding a capacity load C. V_1 is a conventional triode, C_1 is the input coupling condenser, and R_1 the load resistor which is regarded as separate from the capacitative output load represented by the capacitor C. E_1 is the D.-C. source provided with

2

a tap to which input resistor R_2 is connected to provide grid bias for establishing the quiescent operating point of V_1 at the proper level. As the input pulse goes positive the condenser C is rapidly charged through the relatively low resistance electron path in the tube, and, if the voltage across C tends to rise less rapidly than the grid voltage, the tube conducts more heavily and tends to make the output voltage rise rapidly. On the other hand, when the negative-going portion, or fall of the pulse starts, if the voltage across C tends to drop less rapidly than the grid voltage and a point is reached at which the tube is cut off and no further contribution to the operation is made by the tube, the rate of fall of voltage across condenser C depends solely on the values of R_1 and C, regardless of how rapidly the signal input drops. This may require that the value of R_1 be objectionably low, requiring wastefully large tubes and currents to obtain a given performance.

In accordance with my invention, one embodiment of which is illustrated in Fig. 2, this difficulty is overcome by substituting for load resistor R_1 of Fig. 1, a tube V_2 whose control element is driven in a sense which is opposite to that of V_1. R_2 is returned to an intermediate voltage tap as in the case of Fig. 1 to establish a quiescent operating point, and the grid of V_2 is established at a suitable negative potential through R_3 and D.-C. source E_2. The load C is connected between a point on source E_1, in this case the negative terminal, and the junction of tubes V_1 and V_2.

Two voltages varying in opposite sense for controlling tubes V_1 and V_2 are derived from a paraphase amplifier V_3 having a plate resistor R_4 and a cathode resistor R_5. The voltages across the respective resistors vary in opposite sense, and are respectively applied to tubes V_1 and V_2 through coupling condensers C_1 and C_2. The input signal is applied to V_3 through a coupling condenser C_3 and an input resistor R_8, which is returned to a tap on E_1 to establish the operating point. Any other means for obtaining oppositely varying voltages, which need not necessarily be equal, may be used.

The circuit in Fig. 2 can be further improved by providing additional drive on V_2 if the voltage across C tends to lag behind the grid voltage. This is accomplished by the use of a feedback circuit, an example of which is shown in Fig. 3, wherein the output is balanced against the input resistors in R_6 and R_7 and the voltage appearing at the junction is applied to an amplifier E having

a balanced, push-pull output which, in turn, is applied to the grids of output tubes V_1 and V_2 in proper phase. Thus, if the output voltage variations tend to lag the input voltage variations, a greater actuating voltage is applied to the input of the balanced amplifier tending more strongly to make such output voltage variations match (in opposite sense) said input voltage variations. The use of the additional amplifier improves the action both in V_1 and V_2 if the output fails to exactly follow the input voltage.

An operating form of the circuit of Fig. 3 is shown in Fig. 4, with the addition of certain parts. The inverse feedback voltage is applied to the input circuit of tube V_4, which provides additional amplification, R_{12} being its plate load resistor and R_9 its cathode bias resistor. R_{10} is the input resistor and C_4 the input coupling capacitor for the added stage, and C_5 the input blocking condenser for the whole network.

Figure 5 shows sketches of oscillograms of pulses obtained in the circuit of Figs. 1 and 4. The input pulse for both circuits, except for polarity differences, is shown by solid curve A, which also shows the output pulse for both circuits providing there is no load on the network or said load is purely resistive. However, when the conventional cathode follower in Fig. 1 is loaded by a capacity, the pulse, and particularly the trailing edge of the pulse, is seriously distorted, as shown by dotted curve B, while with the novel system of Fig. 4, the distortion is only slight, as shown by the dotted curve C. The total steady plate current required by the two systems is approximately the same in each case.

Although the advantages of the above invention have been described with particular reference to capacitive loads, it should be understood that it is useful in connection with resistive or other loads where it is desirable that the output network have low internal impedance.

While there has been described what is at present considered a preferred embodiment of the invention, it will be obvious to those skilled in the art that various changes and modifications may be made therein without departing from the invention, and it is aimed in the appended claims to cover all such changes and modifications as fall within the true spirit and scope of the invention.

I claim:

1. An electron tube network for translating signals including a first tube having a cathode, plate, and grid, said plate being connected through a circuit having substantially no impedance to said signals to the positive terminal of a source of direct current, a second tube having a cathode, plate, and grid, a connection from the cathode of the first tube to the plate of the second tube, the cathode of the second tube being connected through a circuit having substantially no impedance to said signals to the negative terminal of said source of direct current, a load connected between a point on said direct current source and said connection, means for biasing said grids, an input circuit, first and second resistors connected in series between the input circuit and the said connection, and amplifier means having its input connected to the junction of said two resistors

and having oppositely-phased outputs which are connected respectively to said grids in such manner that the signal at said connection is opposite in polarity to the signal at said input circuit, whereby distortion of pulse signals is minimized.

2. An electron tube network for translating signals including a first tube having a cathode, plate, and grid, said plate being connected through a circuit having substantially no impedance to said signals to the positive terminal of a source of direct current, a second tube having a cathode, plate, and grid, a connection from the cathode of the first tube to the plate of the second tube, the cathode of the second tube being connected through a circuit having substantially no impedance to said signals to the negative terminal of said source of direct current, a capacitative load connected between a point on said direct current source and said connection, an input circuit, first and second impedances connected in series between the input circuit and the said connection, and amplifier means having its input connected to the junction of said two impedances and having oppositely-phased outputs which are connected respectively to said grids in such manner that the signal at said connection is opposite in polarity to the signal at said input circuit, whereby distortion of pulse signals is minimized.

3. An electron tube network for translating signals including a first tube having a cathode, plate, and grid, said plate being connected through a circuit having substantially no impedance to said signals to the positive terminal of a source of direct current, a second tube having a cathode, plate, and grid, a connection from the cathode of the first tube to the plate of the second tube, the cathode of the second tube being connected through a circuit having substantially no impedance to said signals to the negative terminal of said source of direct current, a capacitative load connected between a point on said direct current source and said connection, an input circuit, an impedance connected between the input circuit and the said connection, and amplifier means having its input connected to an intermediate point on said impedance and having oppositely-phased outputs which are connected respectively to said grids in such manner that the signal at said connection is opposite in polarity to the signal at said input circuit, whereby distortion of pulse signals is minimized.

EDWIN K. STODOLA.

REFERENCES CITED

The following references are of record in the file of this patent:

UNITED STATES PATENTS

Number	Name	Date
2,033,136	Ferrell	Mar. 10, 1936
2,226,459	Bingley	Dec. 24, 1940
2,281,618	Riddle	May 5, 1942
2,358,428	White	Sept. 19, 1944
2,411,706	Berkoff	Nov. 26, 1946
2,431,973	White	Dec. 2, 1947

FOREIGN PATENTS

Number	Country	Date
412,182	Great Britain	June 19, 1934