April 18, 1933. R. S. WILLOUGHBY 1,904,911

MAIN SWITCH AND FUSE CABINET

Filed Jan. 4, 1932

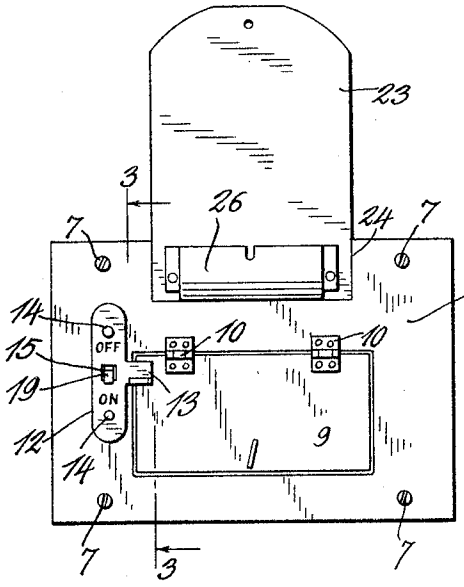

Fig.1.

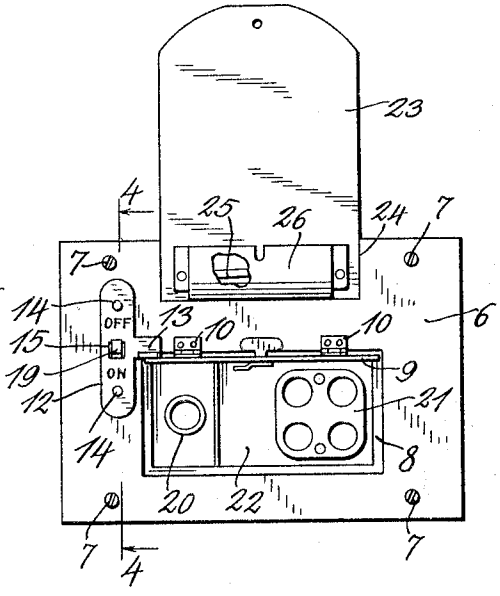

Fig.2.

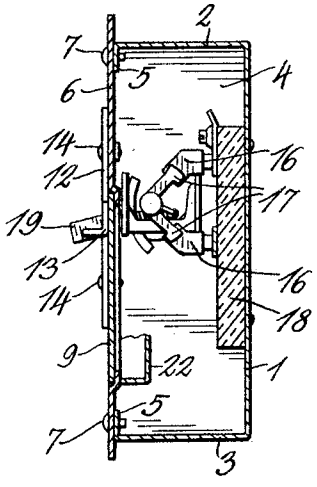

Fig.3.

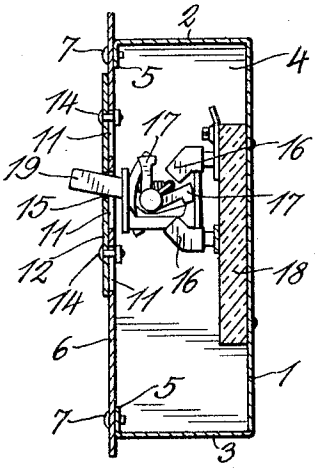

Fig.4.

Inventor

Robert S. Willoughby.

By A. J. O'Brien

Attorney

Patented Apr. 18, 1933 1,904,911

UNITED STATES PATENT OFFICE

ROBERT S. WILLOUGHBY, OF DENVER, COLORADO

MAIN SWITCH AND FUSE CABINET

Application filed January 4, 1932. Serial No. 584,651.

This invention relates to improvements in the construction of main switch and fuse cabinets of the type employed in connection with the wiring of buildings.

The rules require that electric light and power wires shall be separated from the inside wiring by a switch and main fuses which must be enclosed in a box of fireproof construction. A meter is also interposed in the circuit at this point so that all of the current to the several branch circuits will be metered.

It is the object of this invention to produce a main switch and cut-out box of neat and substantial construction that shall be so constructed that a meter can readily be attached to it and connected in the circuit and which shall be provided with a main switch and fuses and also with means for interconnecting the door and switch in such a manner that the door can be opened only after the switch has been opened and so that the door must be closed before the switch can be closed.

Another object of this invention is to produce a combined switch and fuse box having a protective cover for the several terminals on the fuse blocks so as to reduce to a minimum danger of shocks and short circuits and to improve the appearance of the box or cabinet.

The above and other objects that may become apparent as this description proceeds are attained by means of a construction and an arrangement of parts that will now be described in detail and reference for this purpose will be had to the accompanying drawing in which the preferred embodiment thereof has been illustrated, and in which:

Fig. 1 is a front elevation of the improved switch box showing the door closed and the switch in "on" position;

Fig. 2 is a view similar to that of Fig. 1 and shows the switch in "off" position and the door open;

Fig. 3 is a section taken on line 3—3, Fig. 1; and

Fig. 4 is a section taken on line 4—4, Fig. 2.

The box is preferably formed from sheet metal and has a back 1, a top 2, a bottom 3 and sides 4. The front edges of the top and bottom are bent inwardly to form flanges 5 to which the front or cover plate 6 is secured by means of screws 7. Cover plate 6 has a rectangular opening 8 to the upper edge of which the door 9 is secured by means of hinges 10. At the left side of opening 8, the cover plate is provided with three parallel slots 11 which are preferably, but not necessarily in alignment. A slide 12 provided with a latching lug 13 is secured to the cover plate by means of two bolts or rivets 14 that extend through the upper and lower slots and hold the slide in place while permitting it to move longitudinally from the door latching position shown in Fig. 1 to the unlatching position shown in Fig. 2. The slide has an opening 15 that registers with the central slot 11. A main switch comprising stationary contacts 16 and movable contacts 17 is located in the box and secured to an insulating base 18. A handle 19 is connected with the base and serves to operate the same. The handle projects outwardly through the opening in the slide and when the switch is opened and closed the slide is moved. The parts are so proportioned and located that when the switch is closed, the latching lug 13 will project over onto the door as shown in Fig. 1 and will hold the door in closed position, before the door can be opened the switch will first have to be opened and the lug 13 moved to the position shown in Fig. 2. The interlock of the switch and cover forms a safety device that assures against accident by making it necessary to open the switch before the door can be opened.

In addition to the switch the box may also contain a main fuse block 20 and one or more branch blocks 21.

A cover 22 can be secured to the cover plate and provided with openings through which fuses can be inserted and removed. The cover 22 serves to protect the bare terminals and also gives the box a finished appearance.

For the purpose of mounting a meter, a mounting plate 23 has been provided. This

plate has its lower end located in a cut-out or notch 24 in the cover plate and is secured to the flange 5 by means of bolts or screws that have not been shown. The lower end of plate 23 has an opening 25 through which the wires may pass to the meter. A casting 26 serves to cover the lower end of the plate 23 and the conductors.

From the above description it will be apparent that I have produced a main switch and fuse box of a substantial construction that is provided with an interlocking connection between the switch and the door that prevents the latter from being opened while the switch is closed, which is also provided with a plate for supporting a meter and a protective cover for the terminals.

Having described the invention what is claimed as new is:

1. A main switch and fuse cabinet comprising, a box having its front side provided with a door opening, a door for closing the opening, a main switch located within the casing, means comprising a handle for operating the switch, said handle projecting beyond the front surface of the casing, and means comprising a slide movably connected with the casing, said slide having an opening through which the switch handle extends and a laterally extending lug for holding the cover in closed position while the switch is closed, but permitting the cover to be opened when the switch is in open position.

2. A main switch and fuse cabinet comprising, a box having its front side provided with a door opening, a door for closing the opening, a main switch located within the casing, the front side of the box having three slots that extend in the same general direction and which are parallel to one side of the door opening, a switch handle extending through one of the slots and accessible from the outside of the box, a slide provided with two securing devices, each of which projects through a slot and which serves to movably connect the slide with the casing, the slide having an opening through which the handle extends, whereby when the switch is operated, the slide will be moved, the slide having a latch portion that extends over a portion of the door when the switch is closed and which is moved to unlatching position when the switch is opened.

3. A main switch and fuse box of the type described having a box portion provided with a removable cover member, the cover member having a rectangular door opening, a door hinged to one side of the opening, the removable cover having three substantially parallel slots located along one end of the door opening, a switch located in the box, said switch having an operating handle which extends through one of the slots, a slide having an opening through which the handle extends, the slide having also two bolts that extend through the other two slots for holding the slide and guiding it in its movements and a projection formed integral with the slide, said projection extending over the door when the switch is closed and being located above the door when the switch is open.

In tesimony whereof I affix my signature.

ROBERT S. WILLOUGHBY.