Nov. 3, 1970 P. MAHADEVAN ETAL 3,537,266

ION ENGINE THRUST MULTIPLIER

Filed Jan. 22, 1968 2 Sheets-Sheet 1

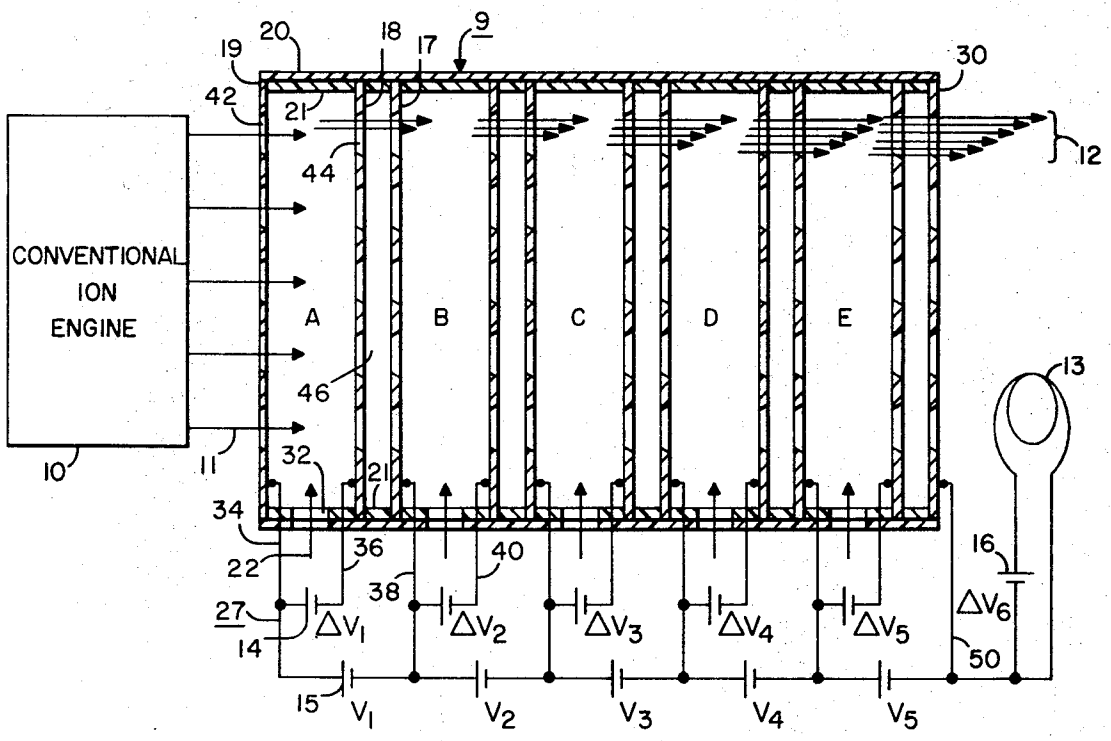

FIG. 1

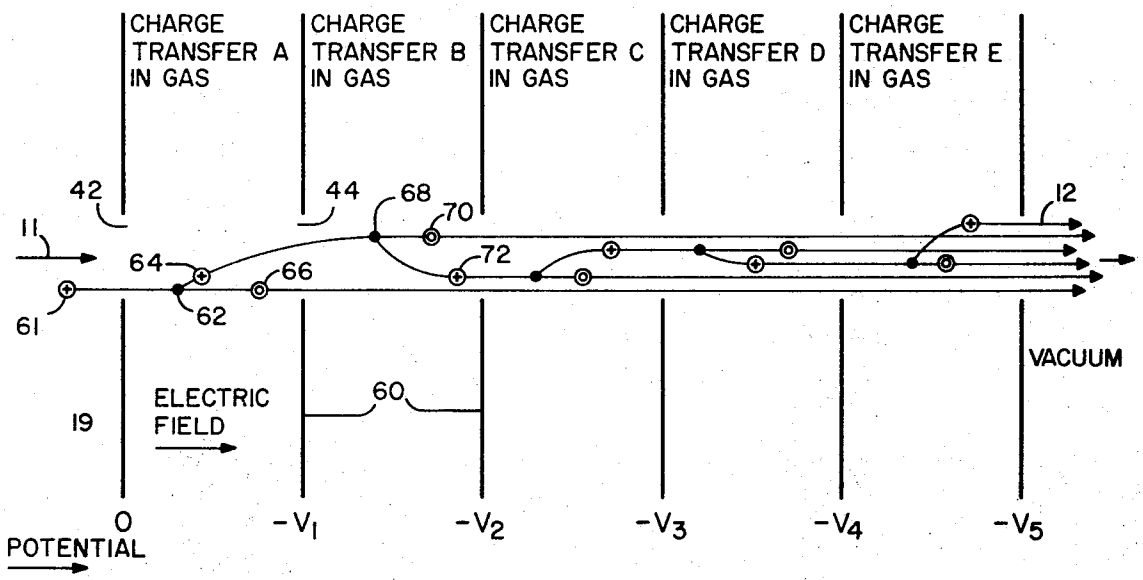

FIG. 2

INVENTOR.
PARAMESWAR MAHADEVAN
GUSTAV D. MAGNUSON
CARL E. CARLSTON
BY
ATTORNEY

Nov. 3, 1970 P. MAHADEVAN ETAL 3,537,266

ION ENGINE THRUST MULTIPLIER

Filed Jan. 22, 1968 2 Sheets-Sheet 2

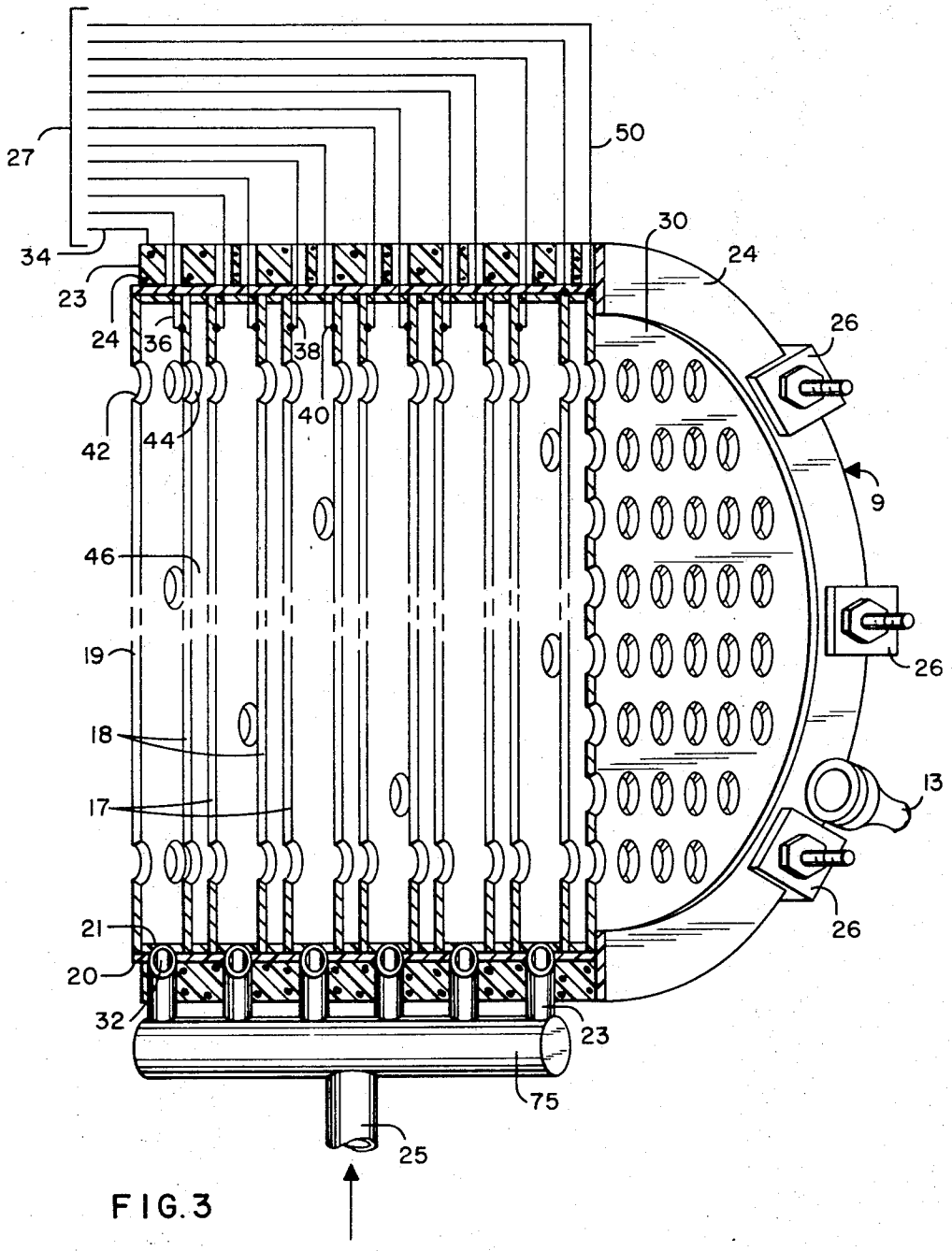

FIG. 3

INVENTOR
PARAMESWAR MAHADEVAN
GUSTAV D. MAGNUSON
BY CARL E. CARLSTON
Neil F. Martin
ATTORNEY

United States Patent Office 3,537,266 Patented Nov. 3, 1970

3,537,266

ION ENGINE THRUST MULTIPLIER

Parameswar Mahadevan, Cerritos, Calif., and Carl E. Carlston and Gustav D. Magnuson, Charlottesville, Va., assignors to General Dynamics Corporation (Convair Division), San Diego, Calif., a corporation of Delaware

Filed Jan. 22, 1968, Ser. No. 699,574
Int. Cl. F03h 5/00; H05h 5/06
U.S. Cl. 60—202 3 Claims

ABSTRACT OF THE DISCLOSURE

This invention produces a multiplied intense beam of fast neutral atoms for the purpose of space propulsion from ion streams produced by a conventional ion engine. The propellent beam of neutral atoms is formed by successive, symmetrical, resonant, charge transfer of positive ions in a uniform parent gas environment in a uniform electric field. Slow positive product ions and fast moving neutral atoms are created and multiplied through successive charge transfer between ions in the ion streams and the thermal gas atoms.

BACKGROUND OF THE INVENTION

The most common method of producing thrust for electrostatic propulsion is an ion engine that ejects positive ions of elements, such as mercury, cesium, or highly charged colloidal particles at predetermined velocities of efflux. In order to maintain electrical neutrality of the space vehicle, the method now favored is to bleed into the intense positive ion jet a stream of electrons at appropriate densities from an electron emitter. Charge exchange processes between the positive ion beam and a neutral gaseous target have also been proposed to provide neutralization of the ion beam. While such ion engines have shown considerable promise for use as space thrust producing engines, it is of advantage to multiply the output thrust of such engines and to provide a neutral atom output that requires a minimum or no neutralization of the ion beam. Thus, this invention is capable of providing an intense beam of electrically neutral particles for space propulsion, which beam magnifies several times the thrust available from a conventional ion engine, and is capable of varying the average velocity of the electrically neutral particles in flight by an appropriate control means.

SUMMARY OF THE INVENTION

The ion engine thrust multiplier of our invention comprises an environmental chamber or container for magnifying the thrust available from a conventional ion engine. The ion streams from a conventional ion engine, where positive ions are generated from a given species of gas, into the environmental chamber. As the positive ions from the ion source or conventional ion engine enter the chamber, they collide inelastically with particles of a gas of the same species maintained at a desired pressure. These collisions create neutral atoms and relatively slow moving positive product ions. The fast moving neutral atoms travel in the original direction of the input ion beam and at substantially the same speed. The chamber has successive stages of a uniformly increasing electrical field and the positive product ions are drawn in the same direction by the uniform field. The stages of the electrostatic field accelerate the slow moving positive product ions to a speed approaching the speed of the input ions. The product ions in another collision transfer their charge to the parent gas atoms after traversing appropriate path lengths. While the neutral atom beam is attenuated to a slight degree by elastic and inelastic collisions in its

passage through the gas in the environmental chamber, at kinetic energies of the order of kev. the angular deviation of the neutral atom beam due to these collisions is negligibly small. Through the various stages of charge transfer reactions and re-acceleration of the created slow moving positive product ions, the number of fast moving neutral atoms formed in the primary and sucessive charge transfer reactions are substantially increased to multiply the thrust available from the ion stream source.

In principle of operation, an intense collimated heavy ion beam, such as developed from mercury, cesium, argon, or any other suitable gas, issues out of a conventional ion engine. The positive ion beams pass into the charge transfer chamber of this invention containing the same species of gas at optimum pressure, and in a uniform electrostatic or electrical field. The positive ions in the beam exchange charge with the thermal gas atoms in inelastic collisions and in resultant symmetrical resonant reactions forming fast neutral atoms and slow positive ions. The reactions are generally as follows.

$$Hg^{+}_{fast}+Hg \rightarrow Hg^{\circ}_{fast}+Hg^{+}_{slow}$$

or

$$Cs^{+}_{fast}+Cs \rightarrow Cs^{\circ}_{fast}+Cs^{+}_{slow}$$

The fast neutral atoms formed retain the same original velocity as the ions, are unchanged in direction and are unaffected by the electrostatic field. The slow moving product ions are accelerated in even stages to again collide and transfer their charge. This cascading process of acceleration of the slow moving positive ions to the desired velocity followed by charge transfers that create an increasing number of fast neutral atoms is repeated several times. Each charge transfer stage thus constitutes a stage of flux and thrust magnification for the ion engine.

The thrust magnification of an ion stream provided by this invention is very advantageous for use in space missions for several reasons. The average velocity of the emerging neutral beam is normally less than that of the original ion beam from the ion engine. So it is possible to obtain variable specific impulse thrust from proper variations of the engine parameters such as variations in field potentials and potential gradients in the charge transfer stages of the charge transfer chamber. Also where low specific impulse thrust is required, as for example where an ion engine has to be run in space at far from optimum operating conditions resulting in loss of thrust, these undesirable features of low impulse operation can be compensated for by the successive charge transfer multiplication of our invention.

Thus it is an object of this invention to provide a new and improved neutral atom propulsion engine.

It is another object of this invention to provide a new and improved ion engine thrust multiplier.

It is another object of this invention to provide a new and improved intense beam of electrically neutral particles for space propulsion.

It is another object of this invention to provide a new and improved means for multiplying the thrust available from a conventional ion engine by successive charge transfer.

Other objects and many intended advantages of our invention will become more apparent in reading the following detailed description and examining the drawings in which:

FIG. 1 is a cross-sectional side view and schematic representation of an embodiment of our invention.

FIG. 2 is a schematic representation of the charge transfer that takes place in the operation of our invention.

FIG. 3 is a cross-sectional view and perspective view of the embodiment of our invention as generally illustrated in FIG. 1.

Referring now to FIGS. 1 and 3, a conventional ion engine or ion source **10** provides a plurality of intense, collimated, heavy, positive, ion beams **11**. These positive ion beams issuing out of the ion engine **10** are generally created from gaseous mercury, cesium, argon or other suitable elements or materials. The ion streams pass through appropriately aligned apertures **42** and **44** in a plurality of charge plates that are positioned along the length of a charge transfer chamber **9**. The charge transfer chamber **9** comprises an outer cylindrically shaped housing **20** of insulating material having a plurality of insulating spacers **21** positioned against or secured to the inner surface of the housing **20**. The apertured plates, as for example plates **17**, **18** and **19**, are appropriately spaced and held by the insulating spacers **21** within the charge transfer chamber **9**. As may be seen, the apertured plates are grouped into, for example, groups **17** and **18** forming drift regions A, B, C, D, and E and acceleration regions **46**. A plurality of potential sources V1, V2, V3, V4, and V5 provide appropriate potentials to certain groups of charge plates. As for example, potential source V1 or **15** is connected across the charge plates **17** and **19**. A second potential source ΔV1 or **14** is connected through lines **34** and **36** to different groupings of charge plates **18** and **19**. A similar connection of potentials are connected through appropriate lines, as for example lines **38** and **40**, for connecting ΔV2 to the next adjacent charge plates and similar electrical connections connect ΔV3, ΔV4, and ΔV5, to to respective adjacent charge plates. Accordingly, the potential orientation of V1 through V5 and ΔV1 through ΔV5 create a progressively increasing electrical or electrostatic field with a drift field in spaces A through E and acceleration fields in the spaces **46**.

A gas of the same species as used in the conventional ion engine **10** is injected through apertures **32** and through the insulating sheath **20** to the respective spaces A, B, C, D, and E of the charge transfer chamber **9**. Referring to FIG. 3, the gas vapor is obtained from a suitable boiler (not shown) which contains the material vaporized, and is transported through a line **25** to a manifold **75** and is distributed through the plurality of distributing conduits **29** supplying gas to the charge transfer chamber **9**. The charge transfer chamber **9** is surrounded by a source of heat provided by any suitable means, such as electrical heating members **24** embedded in an insulated body **23** that is positioned on the outer surface of the insulating sheath **20**. The small amount of heat provided by the heating device **24** supplements the heat input from the ion thruster or engine **10** to prevent condensation of the propellant vapor and maintains the proper pressure for thrust multiplication. It should be understood that the spacings between, for example plates **18** and **19** or between plates **17** and **18**, and the pressure of the propellant gas species in the environmental chamber **9** are selectively adjusted for a specific application.

The apertures **42** and **44** in the charge plates, as for example charge plates **17**, **18**, **19** and **30** are aligned with discharge openings in the output plate of the ion engine **10** so that the ion streams **11** pass directly in linear movement through the apertures in the charge plates and out the discharge of the charge transfer chamber **9**.

Referring to FIG. 2, there is illustrated the operation of the charge transfer chamber **9** in multiplying the propellent beam. An ion beam **11** passes through openings **42** in the charge plates **60**. A positive ion **61**, for example, enters into the first charge transfer stage A and impacts with an atom of the species gas at point **62**. This inelastic collision provides a charge transfer that creates the neutral atom **66** having the same velocity as

the positive ion **61** and a second positive ion **64**. The neutral atom **66** travels in the same direction of movement as the positive ion **61** and thus passes out of the charge transfer chamber **9**. The second positive ion **64** drifts and is accelerated by virtue of the electrostatic field in the charged transfer stage A to a velocity approaching the velocity of the input positive ion **61**. The second positive ion **64** inpacts at point **68**, with another atom of the species gas again providing a charge transfer and creating a second neutral atom **70** and a third positive ion **72**. As may be seen this multiplication continues in the successive stages of the charge transfer stages A, B, C, D, and E to provide the increased multiple beam **12** that is emitted from the charge transfer chamber **9**. Accordingly, the total flux leaving the device from each aperture is in this way greater than the incoming flux. The number of stages may be increased or decreased for optimum operation for a specific space propulsion objective. In general, the voltage V1 will be the same as the accelerating voltage of the original incoming ions **11**. The distances between plates, for example, is determined by the species gas used and the energy spread desired of the existing flux.

It should be recognized in referring to FIG. 1, that the slow ions drift in spaces A through E and accelerate in the spaces **46**. However the plates **17** and **18** can be combined to provide a single potential region wherein the ions are accelerated in as well as drawn through the regions A, B, C, D, and E.

While the primary output in beam **12** comprises neutral fast moving atoms that do not create a space charge, there are a few positive ion products resulting from the charge transfer process that also leave the output of the chamber **9**. Accordingly, when the slow, positive, product ions leave the chamber **9**, they create a space charge that may require neutralizing. Accordingly a known space charge neutralizer **13** functions to neutralize this space charge by supplying electrons that neutralize the positive product ions. The space charge neutralizer is normally used only when positive ions are issued from the final stage, and can be any of the presently existing space charge neutralizers already in standard use on ion thrusters.

The charge transfer chamber **9** will normally be secured to the discharge end of the conventional ion engine **10** and may be held together and against the conventional ion engine by appropriate straps and longitudinal connectors **26** in the manner known in the art. An insulating member **24** is positioned at the discharge end of the multiplying device **9** to provide an insulating connection for the connectors **26**.

While many features and applications of our invention have been disclosed in the specific embodiment, it should be recognized that other possible configurations, uses and adaptations of our invention are possible by those skilled in the art.

Having disclosed our invention, we now claim:

1. An ion engine thrust multiplier comprising:

ion source means for providing at least one ion stream,

multiplier means for increasing the thrust of said ion stream by successive charge transfer between positive ions and gas atoms providing an increased output of neutral atoms and second positive ions,

said multiplier means includes a charge transfer chamber that receives said ion stream,

said chamber has a plurality of grouped and spaced pairs of electrically energized charge plate means positioned in and spaced along the length of said chamber for providing separate successive stages of a uniform electrostatic field in the direction of movement of said ion stream,

each of said pairs of plate means comprises a pair of plates for receiving a given voltage differential between the plates,

said second positive ions being accelerated between said pairs of plates,

and gas source means for uniform injection of gas atoms into said chamber in spaces between said pairs of plates along the length of said chamber.

2. An ion engine thrust multiplier as claimed in claim 1 in which:

said ion source means provides a plurality of culminated positive ion streams,

and each of said plurality of charge plates have a plurality of openings that are aligned to receive said ion streams and pass said created neutral atoms and said second positive ions.

3. An ion engine thrust multiplier as claimed in claim 2 including:

means surrounding said chamber for providing sufficient heat to said chamber to substantially prevent condensation of said gas and maintain proper pressure in said chamber for thrust multiplication.

References Cited

UNITED STATES PATENTS

3,136,908	6/1964	Weinman	313—63
3,156,090	11/1964	Kaufman	60—202
2,253,402	5/1966	Hammer	60—202
3,380,249	4/1968	Meckel	60—202

CARLTON R. CROYLE, Primary Examiner.

U.S. Cl. X.R.

313—63