US00D948050S

(12) **United States Design Patent** (10) **Patent No.: US D948,050 S**
Miller et al. (45) **Date of Patent: ** Apr. 5, 2022**

(54) **SPINAL IMPLANT**

(71) Applicant: **WARSAW ORTHOPEDIC, INC.**, Warsaw, IN (US)

(72) Inventors: **Keith E. Miller**, Germantown, TN (US); **Colleen Meara Cole Mignogna**, Southaven, MS (US); **Anthony J. Melkent**, Germantown, TN (US)

(73) Assignee: **WARSAW ORTHOPEDIC, INC.**, Warsaw, IN (US)

(**) Term: **15 Years**

(21) Appl. No.: **29/724,067**

(22) Filed: **Feb. 12, 2020**

(51) **LOC (13) Cl.** **24-03**

(52) **U.S. Cl.**
USPC **D24/155**

(58) **Field of Classification Search**
USPC D2/617; D3/201, 203.1, 203.6, 203.7, D3/304, 306, 314; D8/382; D14/205, D14/223; D15/199; D24/101, 102, 104, D24/133, 141, 155, 171, 188, 190, 193, D24/194, 196, 216, 224, 227, 228, 229, D24/231; D29/123
CPC .. A41D 19/00; A41D 19/0017; A41D 19/015; A41D 19/0055; A61B 17/80; A61B 2017/00292; A61B 2017/00796; A61B 2017/00969; A61B 50/30; A61B 50/33; A61B 17/8033; A61B 17/8038; A61B 17/8042; A61B 17/8047; A61B 17/8052; A61B 17/8057; A61B 17/8061; A61B
(Continued)

(56) **References Cited**

U.S. PATENT DOCUMENTS

6,176,882 B1 1/2001 Biedermann et al.
6,245,108 B1 6/2001 Biscup
(Continued)

OTHER PUBLICATIONS

Spinal Surgery News, "FDA Approval for Titan Spine NanoLock", first available Mar. 9, 2015. (https://www.spinalsurgerynews.com/2015/03/fda-approval-for-titan_spine_nanolock/9556) (Year: 2015).*
(Continued)

Primary Examiner — Lauren D McVey
Assistant Examiner — Justin A Johnson

(57) **CLAIM**

The ornamental design for a spinal implant, as shown and described.

DESCRIPTION

FIG. **1** is a top perspective view of a first embodiment of a spinal implant showing my new design;
FIG. **2** is a bottom perspective view thereof;
FIG. **3** is a first side elevation view thereof;
FIG. **4** is a second side elevation view thereof;
FIG. **5** is a rear elevation view thereof;
FIG. **6** is a front elevation view thereof;
FIG. **7** is a top plan view thereof;
FIG. **8** is a bottom plan view thereof;
FIG. **9** is a top perspective view of a second embodiment of a spinal implant showing my new design;
FIG. **10** is a bottom perspective view thereof;
FIG. **11** is a first side elevation view thereof;
FIG. **12** is a second side elevation view thereof;
FIG. **13** is a rear elevation view thereof;
FIG. **14** is a front elevation view thereof;
FIG. **15** is a top plan view thereof; and,
FIG. **16** is a bottom plan view thereof.

The broken lines immediately adjacent to solid lines depict unclaimed boundaries that form no part of the claimed design. The remaining broken lines shown in the figures are included for the purpose of illustration and form no part of the claimed design.

1 Claim, 16 Drawing Sheets

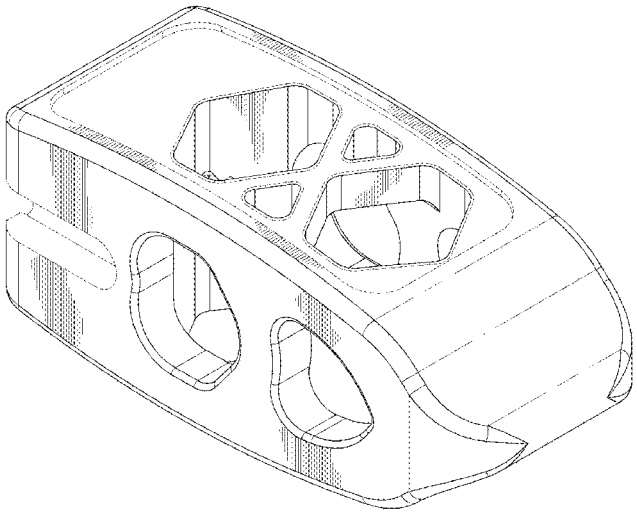

(58) **Field of Classification Search**
CPC 17/86; A61B 17/68; A61B 17/683; A61B 2017/564; A61F 2/00; A61F 2/02; A61F 2002/046; A61F 2/12; A61F 2/20; A61F 2/203; A61F 2/26; A61F 2/28; A61F 2002/2853; A61F 2/30; A61F 2/50; A61F 2002/5038; A61F 2002/5058; A61F 2002/5064; A61F 2/52; A61F 2002/526; A61F 2/54; A61F 2/58; A61F 2/583; A61F 2/60; A61F 2/604; A61F 2/64; A61F 2/66; A61F 2002/6614; A61F 2002/6621; A61F 2002/6628; A61F 2/82; A61F 2/86; A61F 2/88; A61F 2/885; A61F 2/4014; A61F 2002/4018; A61F 2002/4022; A61F 2002/4029; A61F 2002/4033; A61F 2002/4037; A61F 2002/4044; A61F 2002/4051; A61F 2/4059; A61F 2002/4062; A61F 2002/4066; A61F 2002/407; A61F 2002/4074; A61F 2002/4077; A61F 2/4081; A61F 2002/4085; A61F 2002/4088; A61F 2002/4092; A61F 2002/4096; A61F 2/442; A61F 2/4425; A61F 2/4455; A61F 2/4465; A61F 2/447; A61F 2/4611; A61F 2002/2817; A61F 2002/2835; A61F 2002/3083; A61F 2002/30092; A61F 2002/30523; A61F 2002/30538; A61F 2/30771; A61F 2/30942; A61F 2002/30617; A61F 2002/30774; A61F 2002/30784; A61F 2002/30892; A61F 2002/30828; A61F 2002/3008; A61F 2002/30428; A61F 2002/30471; A61F 2002/30507; A61F 2002/30904; A61F 2002/30421; A61F 2002/443; A61N 1/05; A61N 1/0551; A61N 1/20; A61M 16/04
See application file for complete search history.

(56) **References Cited**

U.S. PATENT DOCUMENTS

6,432,140	B1		8/2002	Lin
6,491,724	B1		12/2002	Ferree
D472,632	S		4/2003	Anderson
6,610,089	B1		8/2003	Liu et al.
6,676,703	B2		1/2004	Biscup
6,743,255	B2		6/2004	Ferree
6,773,460	B2		8/2004	Jackson
6,964,687	B1		11/2005	Bernard et al.
6,979,353	B2		12/2005	Bresina
7,137,997	B2		11/2006	Paul
7,141,068	B2		11/2006	Ross et al.
D533,277	S		12/2006	Blain
7,169,183	B2		1/2007	Liu et al.
D541,940	S		5/2007	Blain
7,229,477	B2		6/2007	Biscup
7,326,251	B2		2/2008	McCombe et al.
7,331,996	B2		2/2008	Sato et al.
D566,276	S		4/2008	Blain
7,500,991	B2		3/2009	Bartish et al.
7,569,074	B2		8/2009	Eisermann et al.
7,591,852	B2		9/2009	Prosser
7,641,690	B2		1/2010	Abdou
7,655,043	B2		2/2010	Peterman et al.
D620,110	S		7/2010	Courtney et al.
D620,113	S	*	7/2010	Courtney D24/155
D627,468	S		11/2010	Richter et al.
D629,108	S		12/2010	Richter et al.
D741,488	S	*	10/2015	Tohmeh D24/155
D754,346	S		4/2016	Pimenta et al.
D797,934	S		9/2017	Pimenta et al.
9,937,053	B2	*	4/2018	Melkent A61F 2/4455
D841,167	S	*	2/2019	Ricca D24/155
10,327,913	B2	*	6/2019	Palmatier A61F 2/447
D877,909	S	*	3/2020	Linder D24/155
D878,590	S	*	3/2020	Linder D24/155
D879,961	S	*	3/2020	Linder D24/155
D896,384	S	*	9/2020	Kapitan G06K 19/06037 D24/155
D907,771	S	*	1/2021	Trudeau A61F 2/4455 D24/155
D912,820	S	*	3/2021	Tran A61F 2/4425 D24/155
2018/0078386	A1	*	3/2018	Kieser G06K 19/06037
2020/0405499	A1	*	12/2020	Gerbec A61F 2/4425

OTHER PUBLICATIONS

RY Ortho, "FDA Clears Joimax's Endoscopic-Assisted Fusion Cage", first available Jul. 15, 2015. (https://ryortho.com/breaking/fda-clears-joimaxs-endoscopic-assisted-fusion-cage/) (Year: 2015).*
Modern Machine Shop, "Advanced Material in Additive Manufacturing Produces Better Spinal Implant", first available Apr. 13, 2017. (https://www.mmsonline.com/articles/advanced-material-for-additive-manufacturing-produces-better-spinal-implant) (Year: 2017).*
Orthoworld, "Medlronic Announces the Adaptix Interbody Navigated Titanium Cage", first available Oct. 7, 2020. (https://www.orthoworld.com/medtronic-announces-the-adaptix-interbody-navigated-titanium-cage/) (Year: 2020).*
Office Action dated Sep. 29, 2020 in corresponding Japanese Patent Application No. 2020-016914 with translation summary.

* cited by examiner

FIG. 1

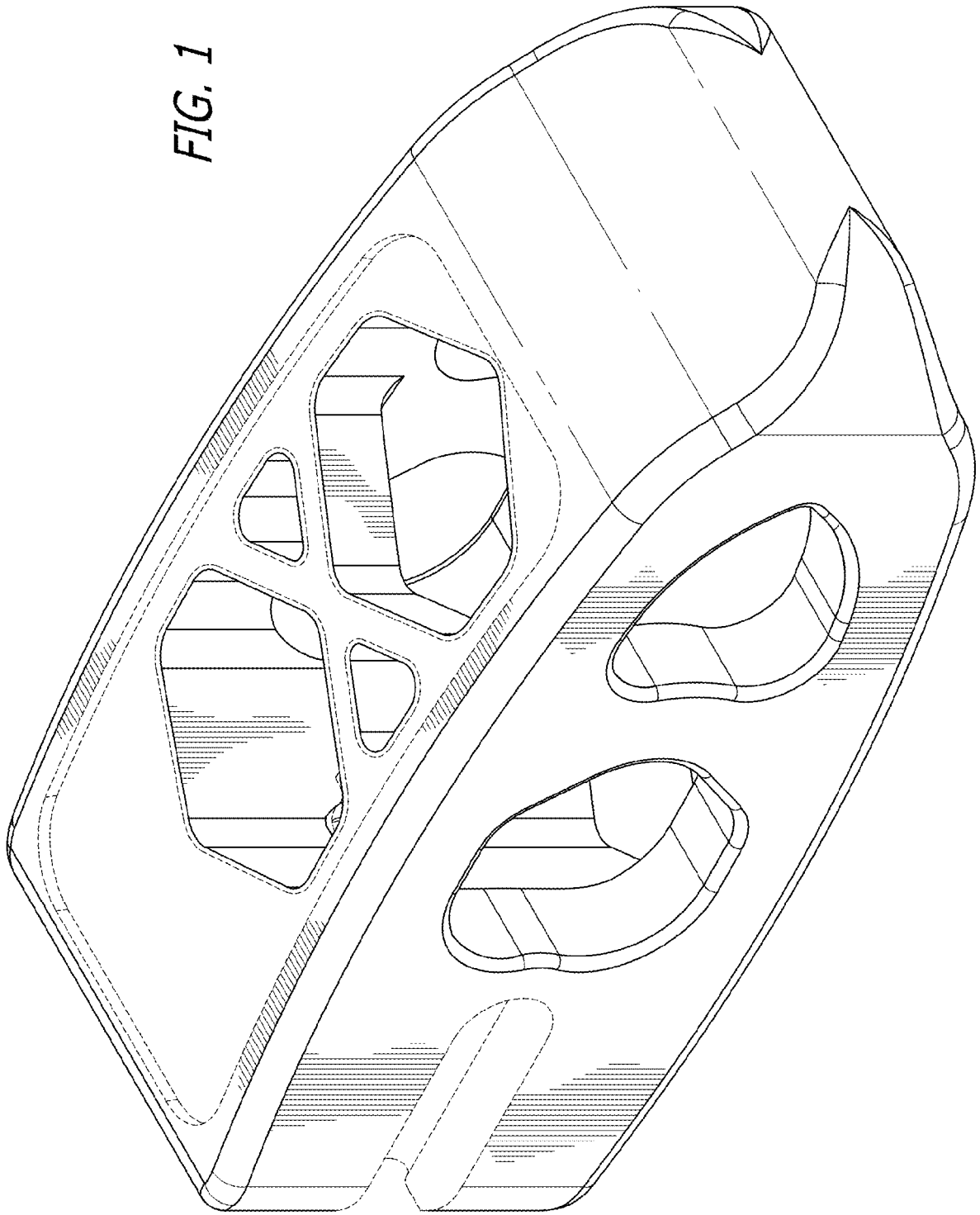

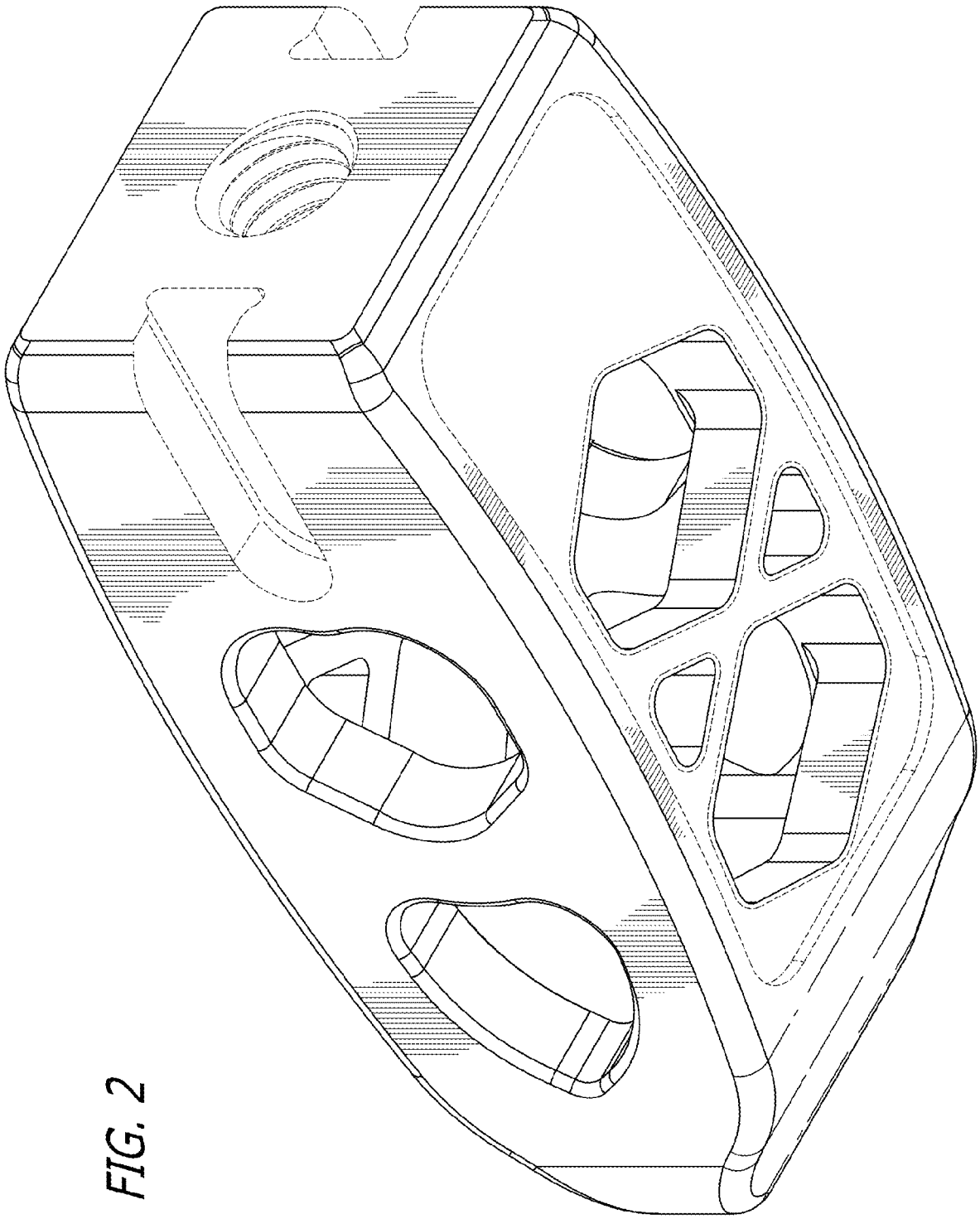

FIG. 2

FIG. 3

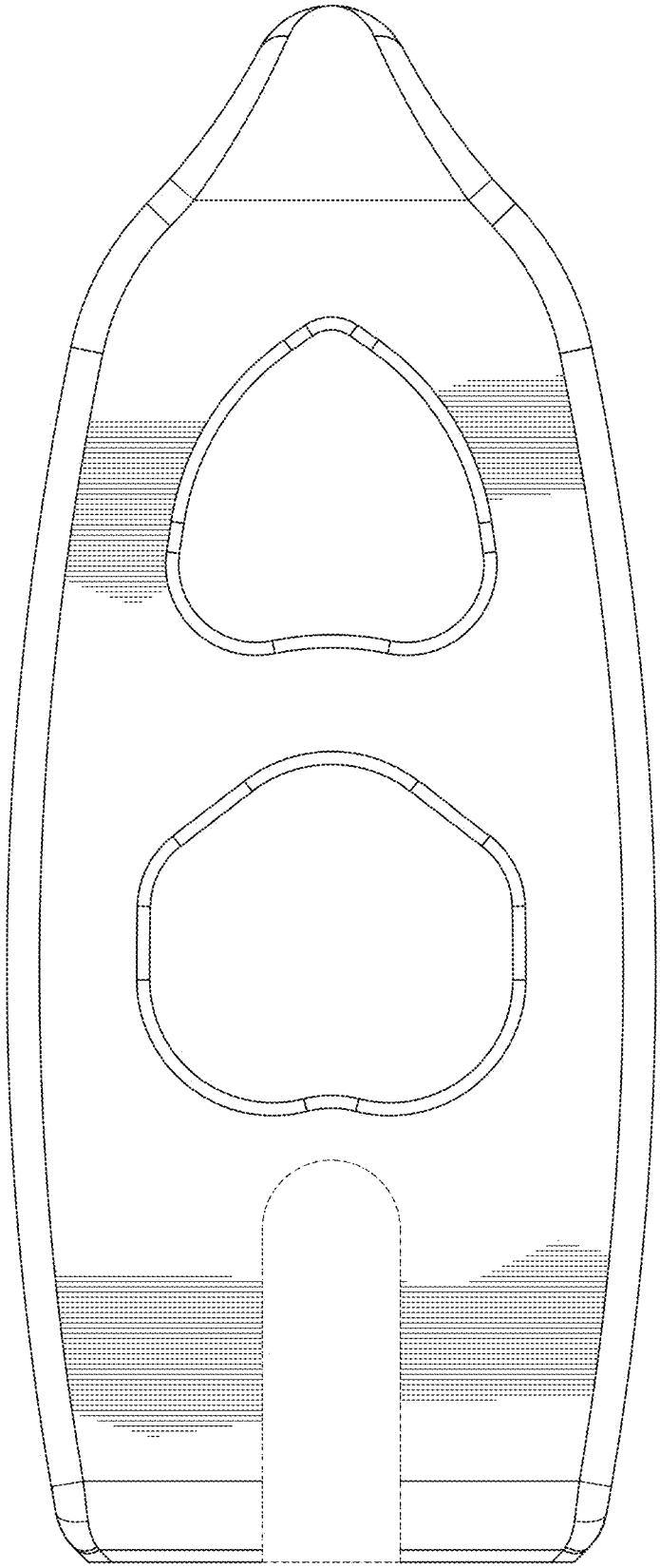

FIG. 4

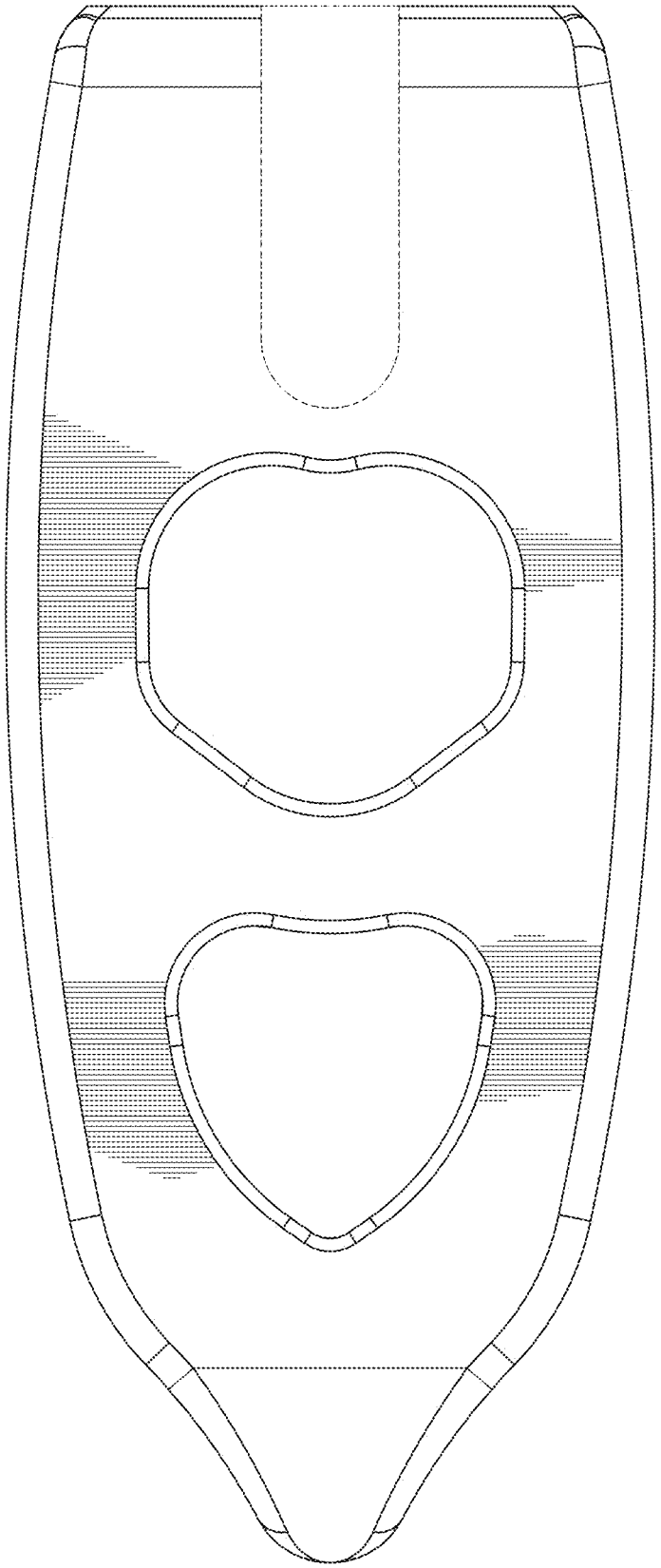

FIG. 5

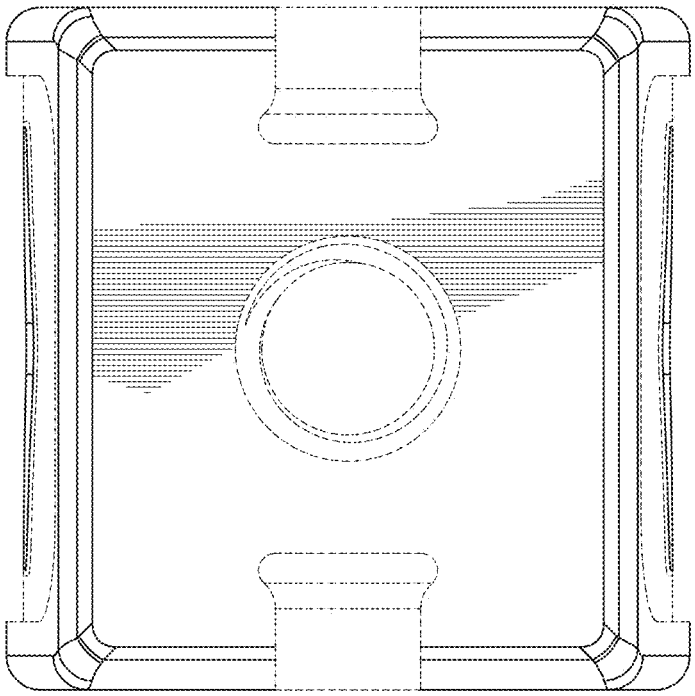

FIG. 6

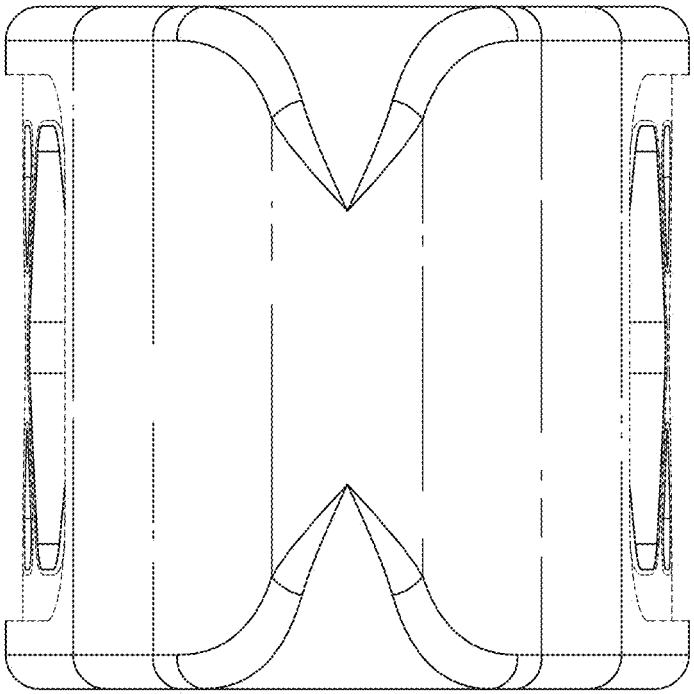

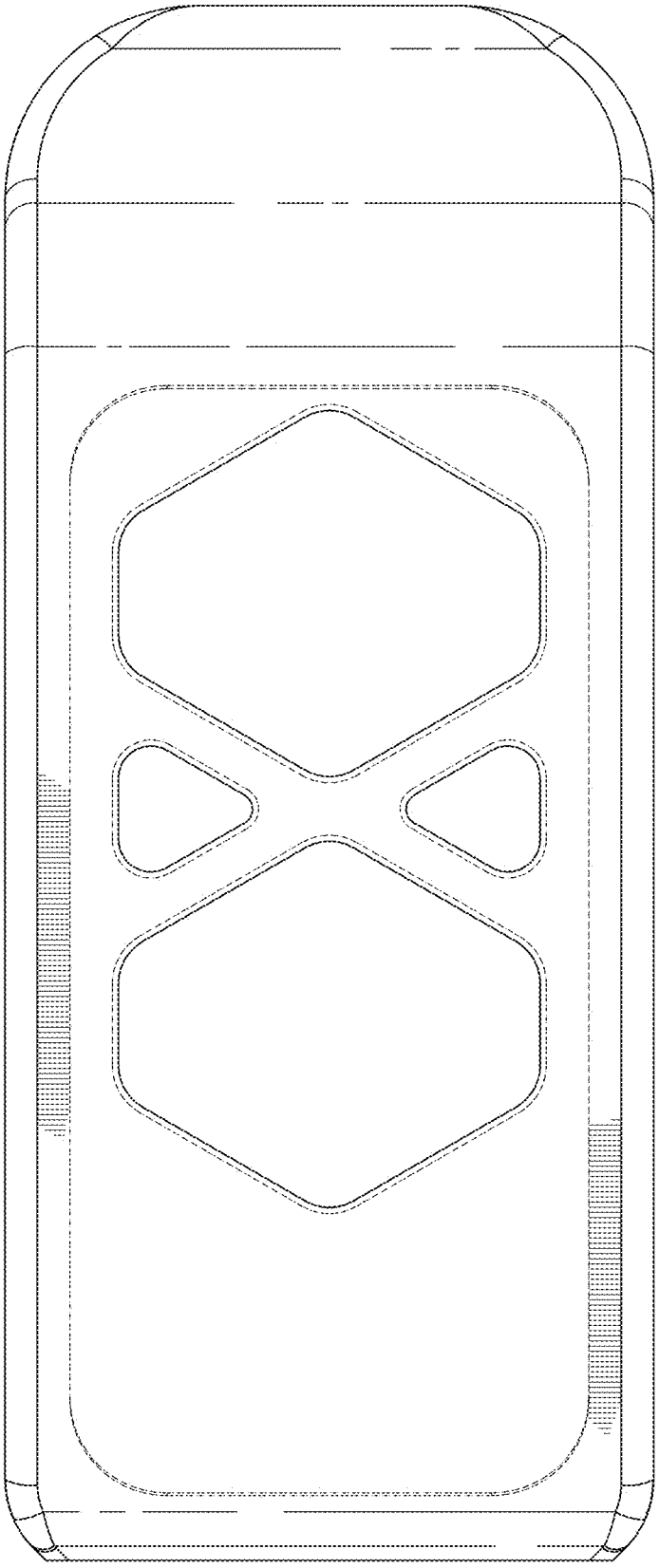

FIG. 7

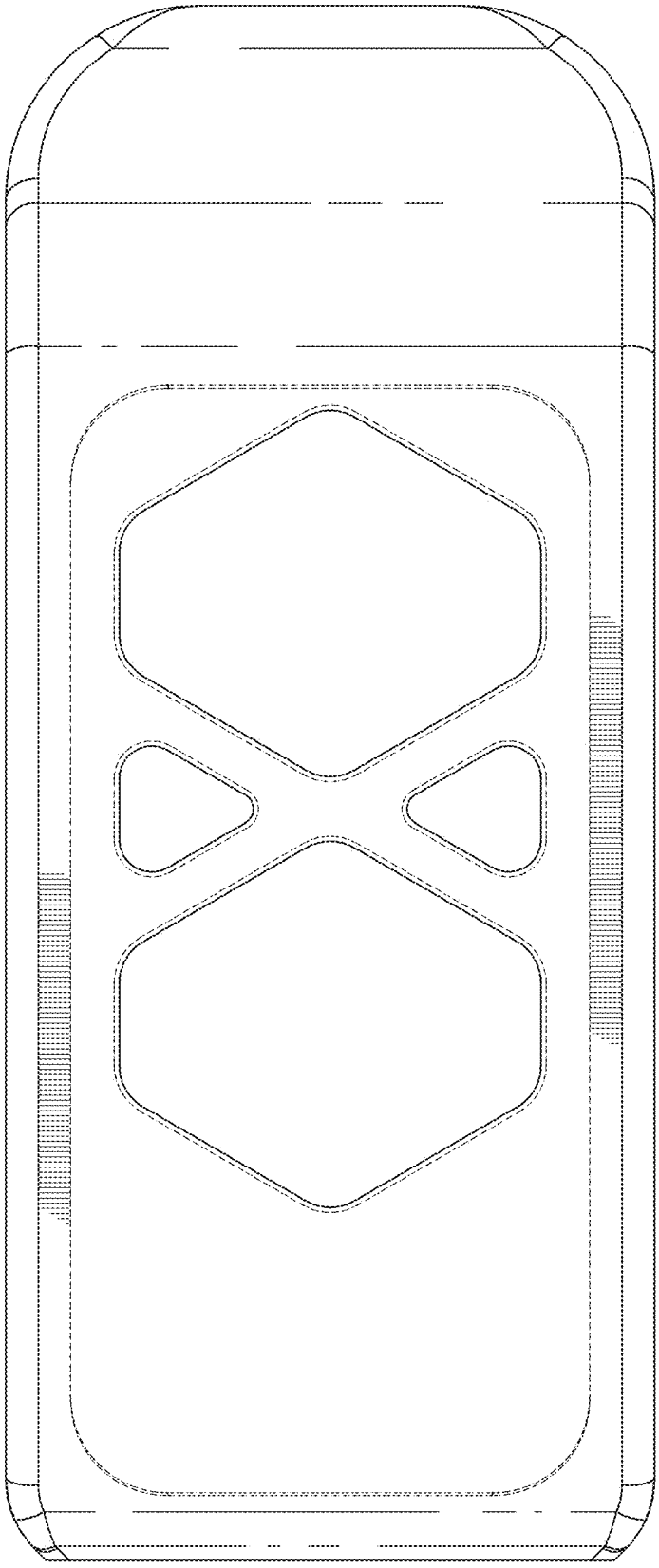

FIG. 8

FIG. 9

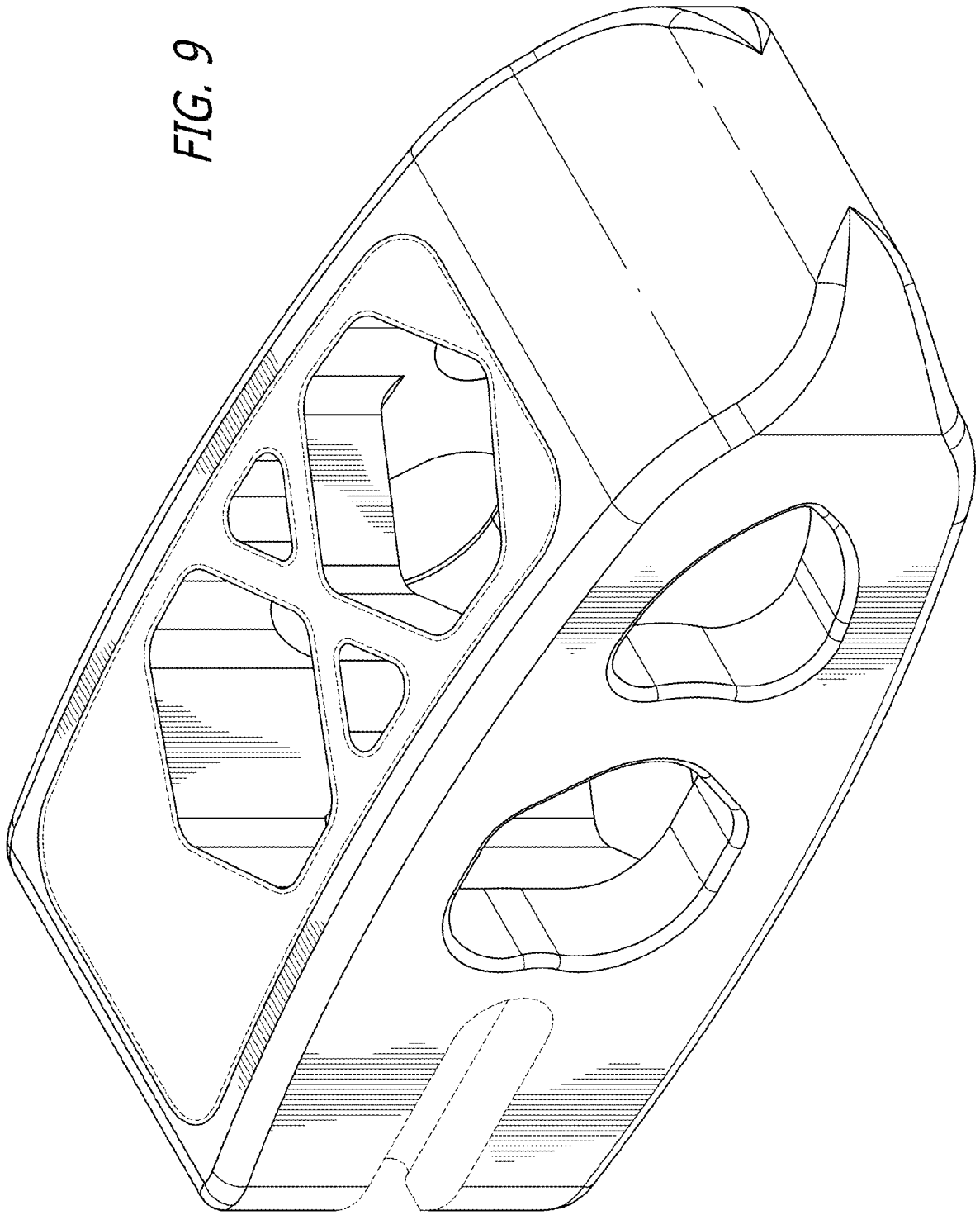

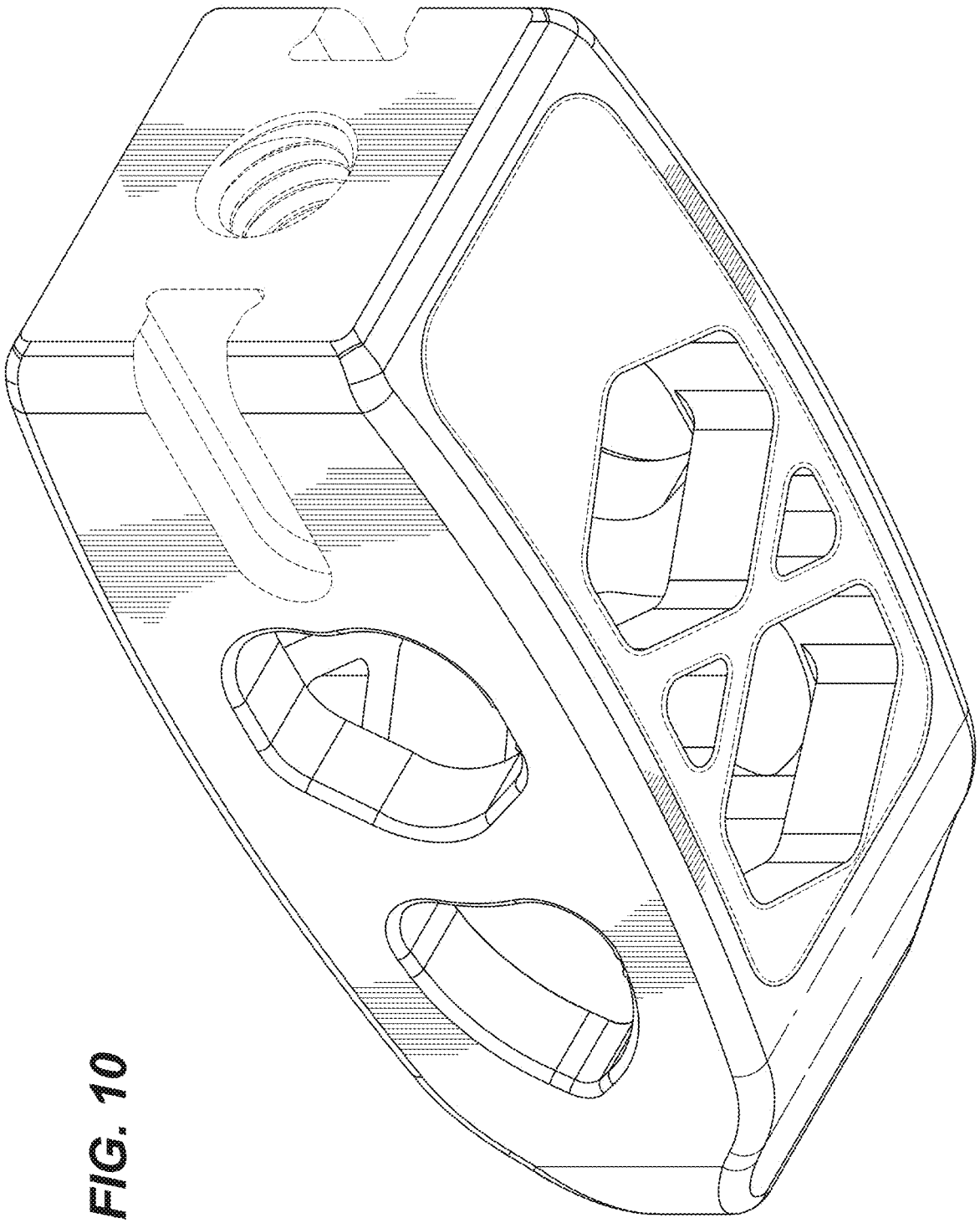

FIG. 10

FIG. 11

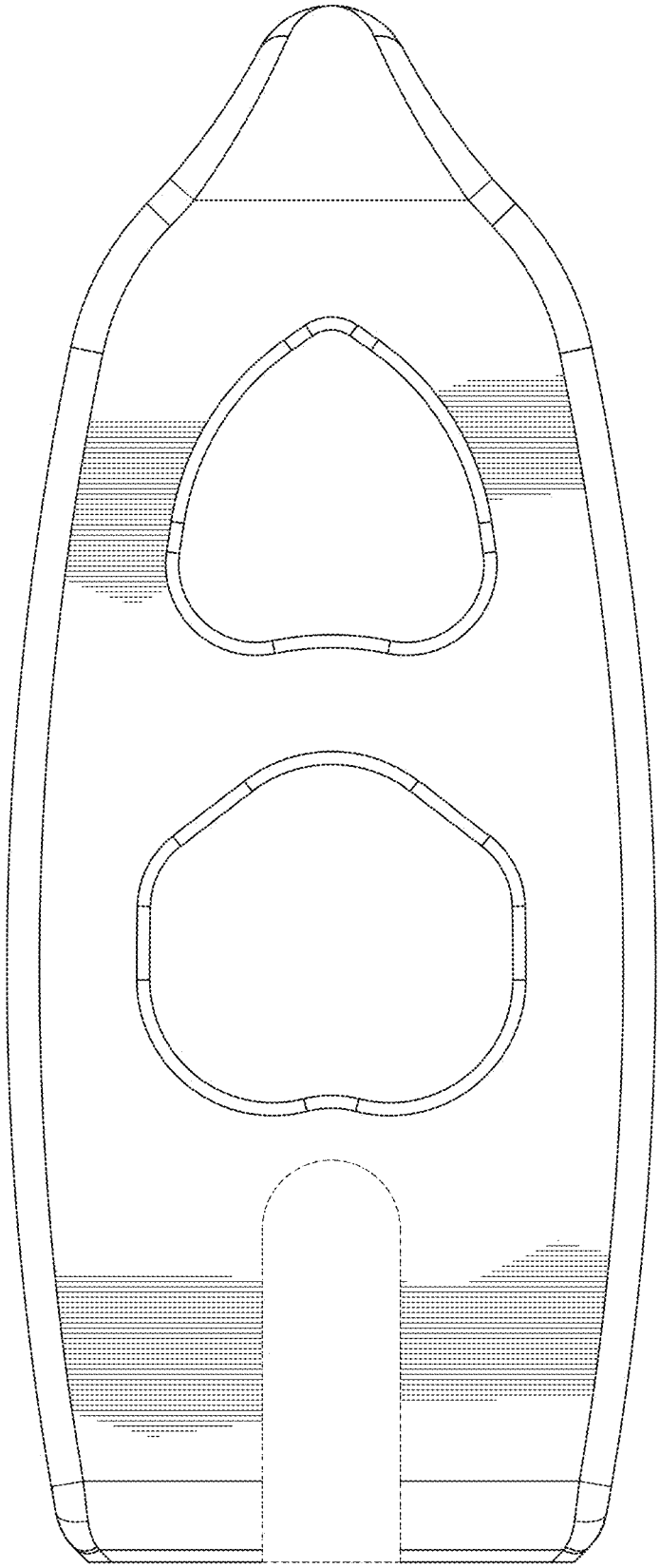

FIG. 12

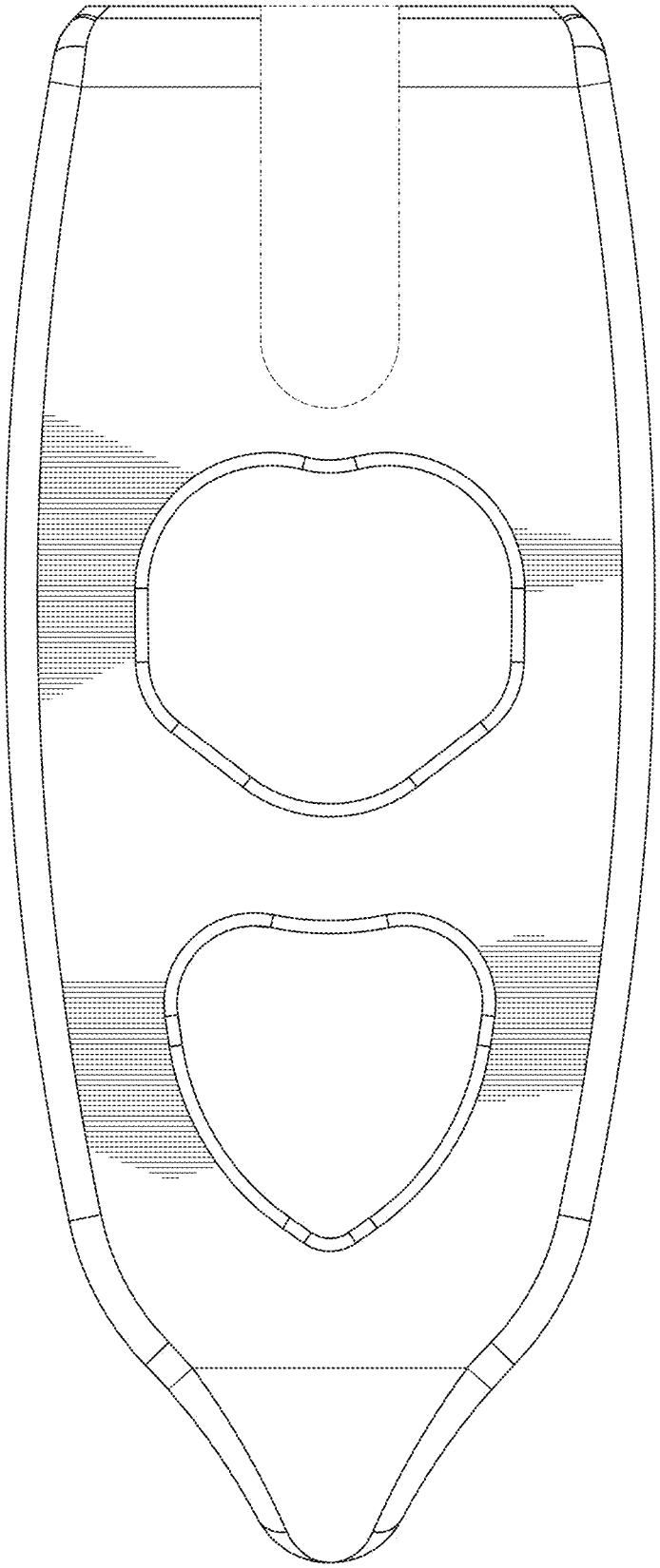

FIG. 13

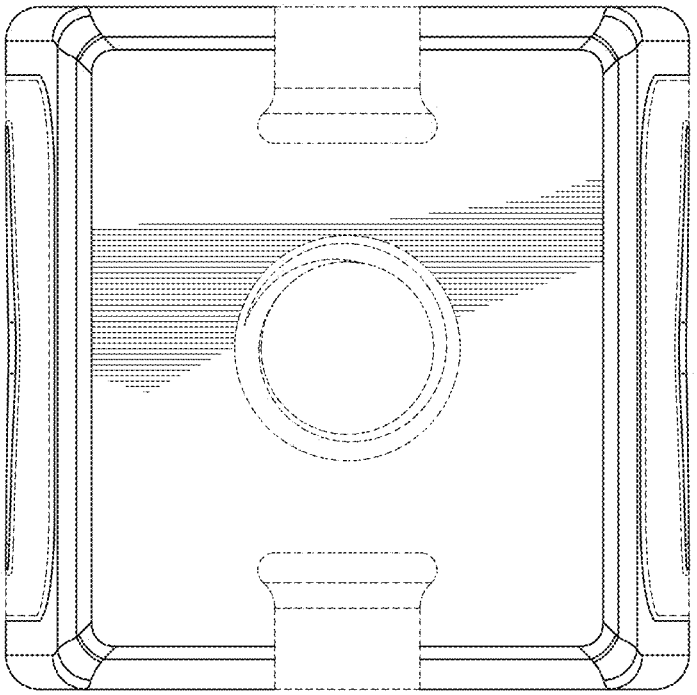

FIG. 14

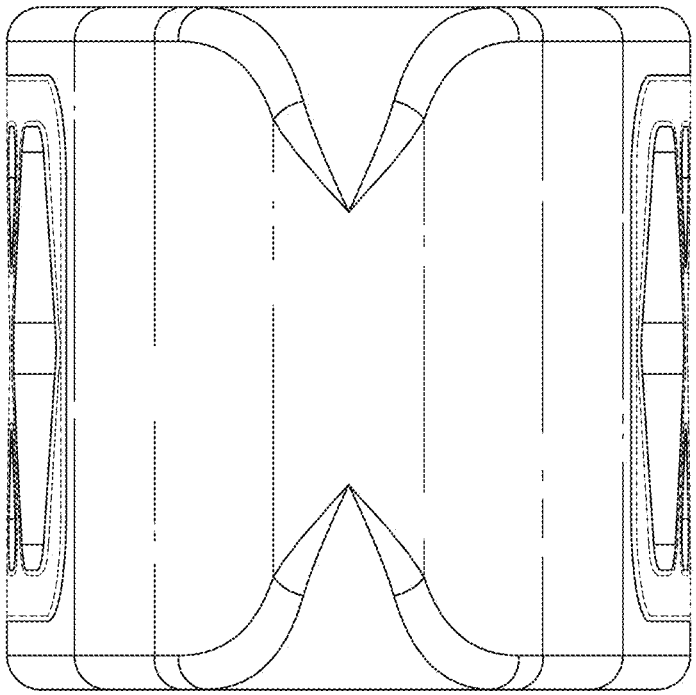

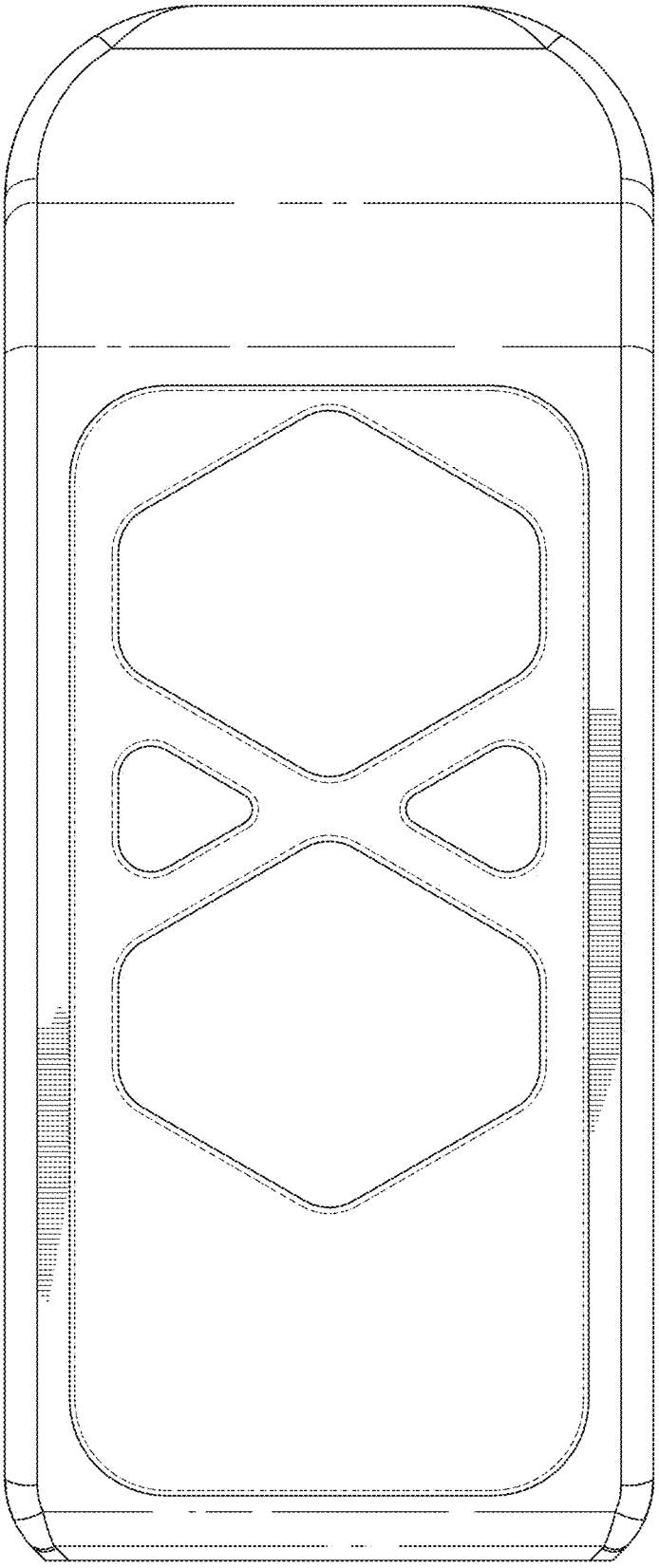

FIG. 15

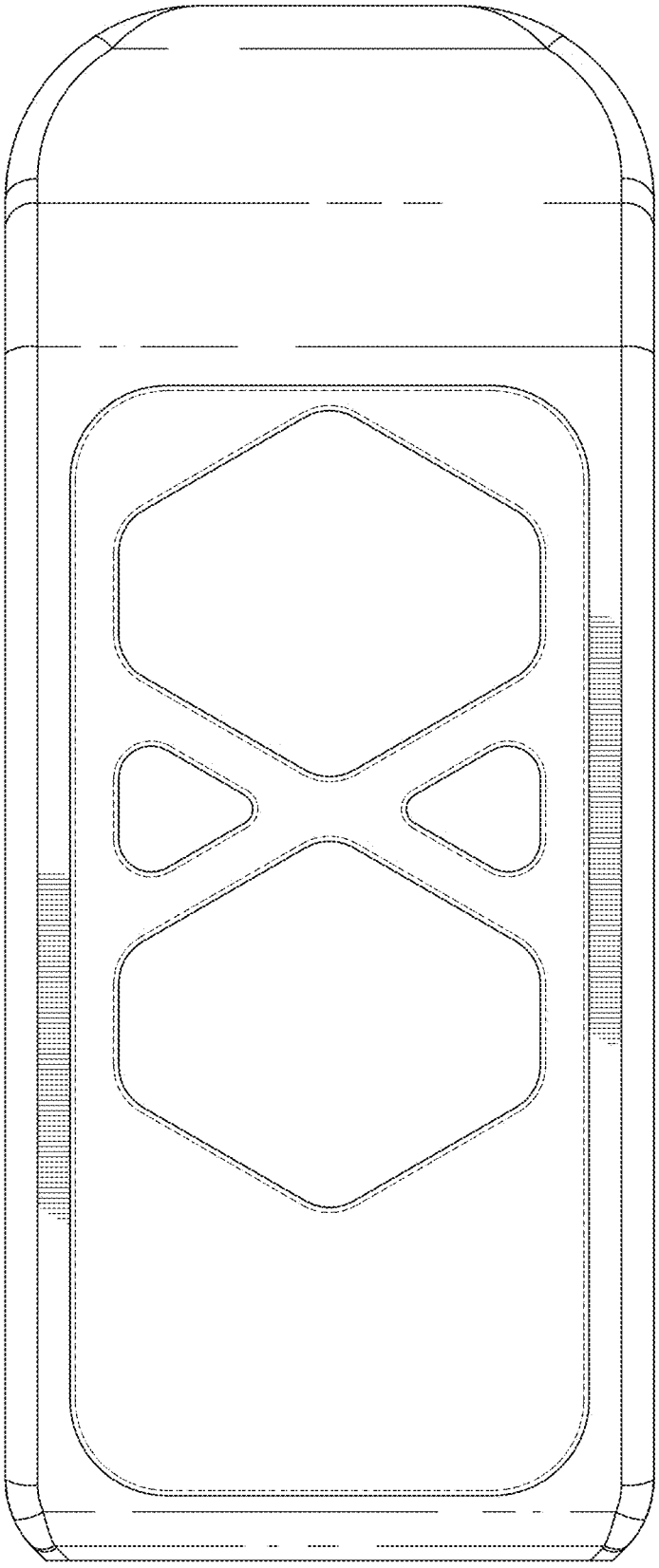

FIG. 16