United States Patent [19]

Goodman

[11] **3,801,817**

[45] **Apr. 2, 1974**

[54] **CATHODE RAY TUBES WITH TARGET SCREENS AND THE MANUFACTURE THEREOF**

[76] Inventor: **David M. Goodman,** 38 Debra Ct., Seaford, N.Y. 11783

[22] Filed: **Aug. 12, 1970**

[21] Appl. No.: **63,331**

Related U.S. Application Data

[62] Division of Ser. No. 772,639, Nov. 1, 1968, Pat. No. 3,598,628.

[52] **U.S. Cl.** **250/365,** 250/368, 250/458

[51] **Int. Cl.** **G01j 39/18**

[58] **Field of Search** ... 240/41.35 R, 41.35 C, 41.37, 240/1 EL, 2.25; 95/1; 250/71, 461, 227, 366, 368, 504, 505, 365; 313/65 LF

[56] **References Cited**

UNITED STATES PATENTS

2,213,868	9/1940	Lucian	240/2.25 X
2,225,439	12/1940	Arens et al.	240/2.25 X
2,897,388	7/1959	Goodman	313/65 LF
3,282,176	11/1966	Morse et al.	95/1.1
3,437,804	4/1969	Schaefer et al.	240/41.35 R
3,439,157	4/1969	Myles	240/1 EL
3,587,417	6/1971	Balder et al.	95/1 R

Primary Examiner—James W. Lawrence
Assistant Examiner—Harold A. Dixon
Attorney, Agent, or Firm—Anthony A. O'Brien

[57] **ABSTRACT**

Point light sources and elongated light sources are disclosed which comprise light pipes in the form of elongated and funnel shaped transparent scintillators. To increase the intensity of the light at the exit terminal of the light pipes, they have tapered sides where the thickness increases in the direction of the exit terminal. Application of these light sources to the photofabrication of line-screen and dot-screen cathode ray tubes is disclosed.

29 Claims, 10 Drawing Figures

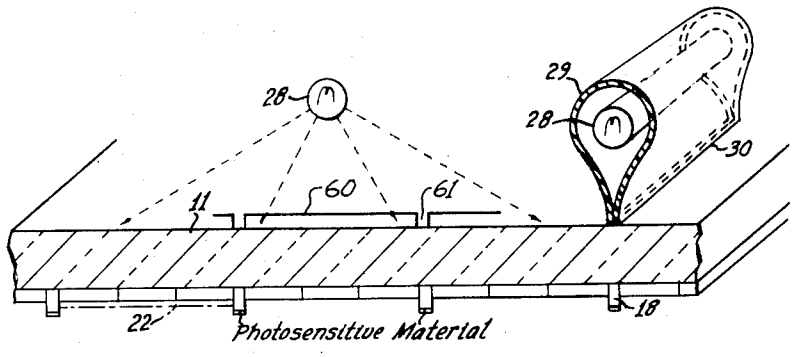

FIG. 1

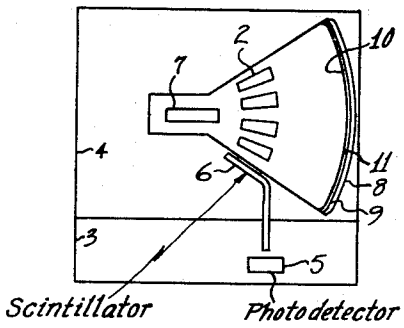

FIG. 2

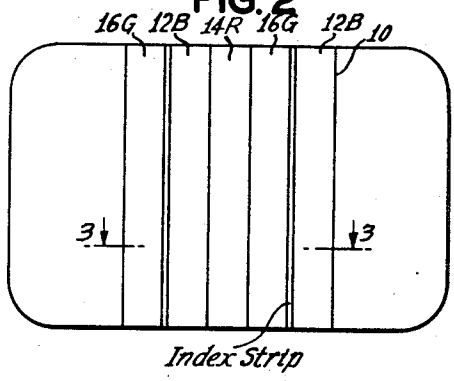

FIG. 3

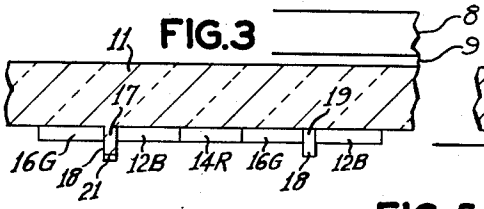

FIG. 4

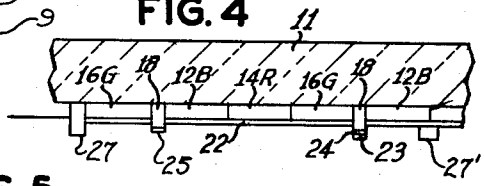

FIG. 5

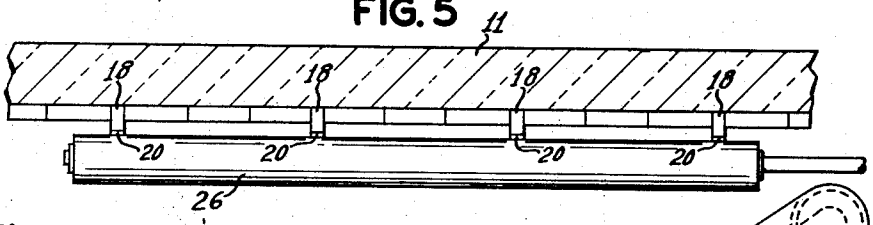

FIG. 6A

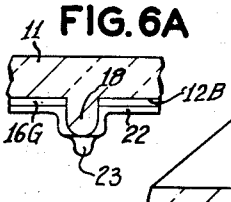

FIG. 6

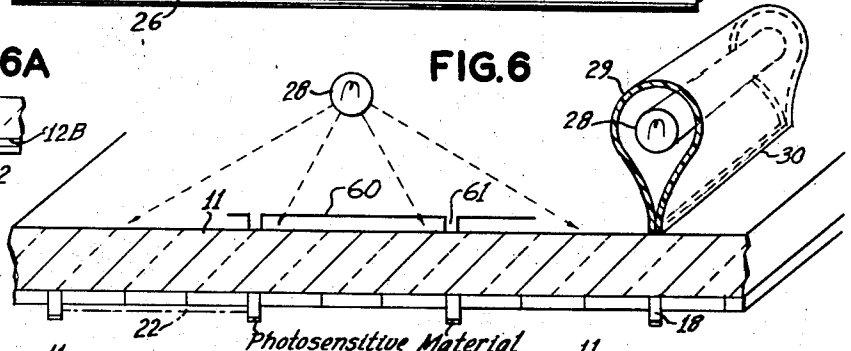

FIG. 7

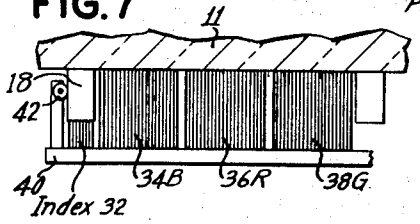

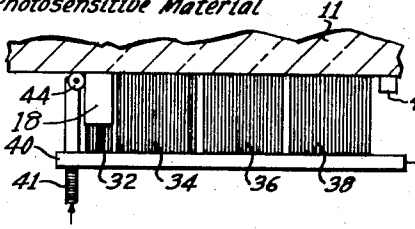

FIG. 8

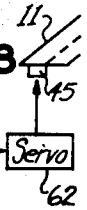

FIG. 9

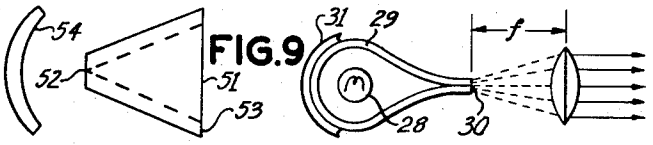

CATHODE RAY TUBES WITH TARGET SCREENS AND THE MANUFACTURE THEREOF

CROSS REFERENCES TO RELATED APPLICATIONS

This is a division of U.S. Pat. application Ser. No. 772,639 filed Nov. 1, 1968 now U.S. Pat. No. 3,598,628.

This application is a continuation-in-part of my copending U.S. Pat. application Ser. No. 85,353 filed Jan. 27, 1961 entitled "Target Screens for Cathode Ray Tubes and the Like" (now U.S. Pat. No. 3,691,424) which is a division of my then copending U.S. Pat. application Ser. No. 800,854 filed Mar. 20, 1959 now U.S. Pat. No. 3,081,414 granted Mar. 12, 1963 entitled "Wide Band Cathode Ray Tribes and the Like." U.S. Pat. application Ser. No. 800,854 in turn was a continuation-in-part on three of my previously copending U.S. Pat. applications, Ser. No. 514,973 filed June 13, 1955 now U.S. Pat. No. 2,885,591 entitled "Cathode and Directed Ray Tubes" and U.S. Pat. Ser. No. 522,609 filed July 18, 1955 now U.S. Pat. No. 2,897,388 entitled "Directed Ray Tube and the Like" and U.S. Pat. Ser. No. 448,039 filed Aug. 5, 1954 now U.S. Pat. No. 2,897,398 entitled "System for Selected Transmission, Storage, Display, Coding or Decoding of Information." The instant application also is a continuation-in-part on my copending U.S. Pat. applications Ser. No. 345,197 filed Feb. 17, 1964 entitled "High Sensitivity Beam-Index and Heaterless Cathode Ray Tubes" which is incorporated by reference; and U.S. Pat. Ser. No. 488,017 filed Sept. 17, 1965 entitled "Systems for Modulation of Beam-Index Color Cathode Ray Tubes, and the Like" now U.S. Pat. No. 3,564,121.

BACKGROUND OF THE INVENTION

1. Field of the Invention

This invention relates to target screens used with beam-index cathode ray tubes. In particular, it relates to target screens used with beam-index color cathode ray tubes (color kinescopes) and improved methods of manufacture thereof.

2. Description of the prior art

It has long been recognized by persons familiar with this art that the cathode ray tube of the beam-index variety can be used as an extremely versatile tool. Especially in the field of color television, it has been long recognized that the beam-index cathode ray tube has many potentially advantageous features. Among these advantageous features is the possible reduction of the number of electron guns from three in present day commercial color tubes of the shadow-mask variety to one gun in a beam-index tube; and the further elimination of the apertured mask and frame assembly, retaining clips, and studs, etc. In addition to the savings on the cost of these parts, there is also advantage derived from the beam-index in that it eliminates the need for precise alignment of the three electron beams with the thousands of holes in the aperture mask. Furthermore, these holes must be aligned with the thousands of trios of phosphor dots on the target screen which requires that the shadow-mask assembly be "married" to its faceplate which introduces another complicating factor in the production of tubes of this type. Additionally, the beam-index tube generally is considered capable of eliminating the costly convergence circuits and assemblies, and the de-gaussing coil and circuits, now considered standard requirements in color television receivers.

The beam-index tube also promises to make possible many improvements in packaging and styling. This includes the construction of very small "personal size" television receivers; the construction of wide angle deflection systems; kinescopes with shorter neck length; and the construction of lighter-weight glass envelopes, with greater use of its faceplate area for image display.

Still further, it has been predicted (and experiments by applicant have confirmed) that the greater efficiency of the beam-index tube permits operation of the target screen at lower voltages than the shadow-mask type of color tube. The result of this lower operating voltage coupled with the removal of the shadow-mask assembly is that the generation of x-radiation is reduced in a beam-index receiver to the point where the problem becomes no more severe than in a monochrome set. Power supply costs also are reduced.

Nevertheless, despite these many significant advantages in economy, esthetics, and health physis the beam-index color tube is not currently in commercial production, not in this country nor elsewhere. One of the reasons for this situation is that the construction of a line-screen beam-index color kinescope on a production basis can introduce a cost savings which is not sufficiently favorable to induce present manufacturers to abandon their very large investment in production facilities now geared to make color kinescopes of the shadow-mask variety.

Some of the difficulties in making line-screen beam-index color kinescopes have been long recognized. Numerous solutions have been offered by many skilled workers in this art. Thus, applicant's own teachings in U.S. Pat. Ser. No. 514,973 (now U.S. Pat. No. 2,885,591) are directed to this subject. Therein, applicant teaches (1) the use of rollable phosphor screens which are mass produced and later inserted into the envelope of the tube, and (2) the use of an electrically conducting mesh which replaces the conventional electron transparent aluminum layer. In U.S. Pat. Ser. No. 522,609 (now U.S. Pat. No. 2,897,388) applicant describes a plurality of target screens for beam-index kinescopes for color television. These target screens contain strips of red, green, and blue color-emitting phosphors in register with index-signal generating strips. The index signals may be in the optical or in the x-ray region of the spectrum. More than one type of index signal may be used. The index-generating elements may be admixed with the color producing phosphors.

In U.S. Pat. Ser. No. 800,854 (now U.S. Pat. No. 3,081,414) which was a continuation-in-part on the two applications just identified, applicant discloses a plurality of target screens for beam-index color kinescopes. These screens include a mesh-like structure which is used in conjunction with strips of color producing phosphor materials wherein selected strands of the mesh also serve to provide the index signals. The disclosure relating to target screens is carried forth into applicant's currently copending U.S. Pat. application Ser. No. 85,353 filed Jan. 27, 1961.

In U.S. Pat. Ser. No. 212,612 filed July 26, 1962 (now abandoned and refiled as U.S. Pat. Ser. No. 562,031 on June 2, 1966) applicant discloses a beam-index and heaterless color kinescope comprising a four

layer target screen. The fourth layer is deposited on top of the index strips to suppress the effects of ion bombardment. Also, in that application which matured into U.S. Pat. No. 3,567,985 spiral shaped scintillators are shown positioned adjacent the funnel section of cathode ray tubes.

In U.S. Pat. Ser. No. 345,197 filed Feb. 17, 1964 applicant discloses target screens for beam-index, heaterless, and color cathode ray tubes which comprise optical fibers positioned across the faceplate of the tube. These fibers, in one embodiment, scintillate in response to electron excitation. Non-scintillating fibers or filaments are also disclosed which have phosphors associated therewith for providing optical signals in response to excitation by the electron beam. Also, index signal producing phosphors are described as being embedded in the faceplate of the tube.

In U.S. Pat. Ser. No. 488,017 filed Sept. 17, 1965 applicant discloses target screens with x-ray generating beam-index elements which are comprised of low atomic weight materials to make them more easily distinguishable from the color producing phosphors.

As to the prior art of others in the field of beam-index color kinescopes, reference is made to Saulnier U.S. Pat. No. 3,367,790 filed Dec. 1, 1964 and granted Feb. 6, 1968 (assigned to the Radio Corporation of America) entitled "Method of Making Color Kinescopes of the Line-Screen Sensing Variety." Saulnier describes at Columns 1 and 2 the difficulties of screen fabrication experienced by workers in this field as follows:

> As is well known, the brightness of an image produced on any television screen is greatly enhanced when the screen is metallized, i.e., when it is provided on its rear surface with a particular metal layer. Metallized phosphor-screens of the above-described sensing varieties, however, have certain disadvantages. These disadvantages result primarily from the fact that, although the usual specular metal layer is transparent to electrons, it is nevertheless substantially opaque not only to (*a*) the invisible rays emitted by the signal-generating material, but also to (*b*) the visible or invisible actinic rays employed in the coventional photographic method of laying-down the line-like mosaic pattern or patterns of which the screen is comprised.

Because, as above mentioned, a conventional electron-transparent specular metal layer is opaque to the invisible (e.g., ultra-violet) control or reference signals, if such a layer is laid down on a sensing-type screen of the kind where the signal-generating indicia and the light-generating phosphor lines comprise but a single layer, then the photocell or other "pick-up" device for the control signals must be mounted in front of the screen-plate. This front mounting is undesirable because the reference signals may be contaminated by ambient rays before they reach the pick-up device. Furthermore, the very presence of the pick-up device in front of the kinescope limits the angle from which the screen may be viewed.

Because prior art tubes that contain a sensing screen having more than two layers (see Law U.S. Pat. No. 2,633,547) employ a pick-up device mounted at the rear of the screen they are not subject to the above-described disadvantages of sensing tubes that contain a two-layer screen. Multi-layer sensing screens however are more expensive to manufacture than two-layer sensing screens. This is so principally because in multi-layer sensing screens the specular metal layer, which comprises the substrate for the signal-generating strips, is opaque to the actinic rays used in the now standard photographic method of forming said strips on the metal. As a consequence, the bulb that is to contain the finished screen must be made in two precisely matched parts (i.e., "cone" and "cap") to permit the optical stencil and light source to be disposed adjacent to the rear surface of the metal layer during the photographic deposition process.

If the several photographic exposures required in laying down a multi-layer sensing screen could all be made with the appropriate optical stencil and light source disposed adjacent to the obverse surface of the face-plate it would then be practical to employ a "one-piece" envelope or bulb (as in a black-and-white kinescope) and thus to effect economics not only in bulb costs but in the photographic process as well. To this end, it has previously been proposed to make the aluminum layer so thin, and the exposure time so long, that the actinic rays required in laying down the sensing strips will penetrate the aluminum (or other specular metal) layer. But such obvious expedients are incapable of practical achievement because the reduction in the thickness of the aluminum layer required to make it permeable to radiation of an intensity useful in the photo-deposition process reduces the electrical conductivity and reflectivity of the specular metal to unusable values.

The foregoing and other less apparent disadvantages of present day two-layer and three-layer sensing-screens are obviated, in accordance with the present invention, by the combination, with any suitable transparent or translucent phosphor substrate, or aspecular metal layer of a thickness normally rendering it substantially opaque to (a) the invisible rays from which the control signals are derived and (b) the visible or invisible actinic rays employed in the screen-plotting operation, yet transparent to electrons, and containing openings in a number and a size sufficient to render said metal layer or certain parts thereof at least 10 percent transparent (and in some cases as high as 25 percent) to such visible and invisible rays. The invention may be said further to reside in the later described methods of achieving specular metal layers of a foraminous (crazed or perforate) nature.

Thus, Saulnier proposes to overcome some of the difficulties previously experienced by providing the target surface of a phosphor screen with a partially transparent specular metal layer. A process for doing this requiring several additional steps in the manufacturing process is the subject of his invention. Thus, it is clear that the construction of line-screen beam-index color kinescopes has attracted expert attention. And, although it has been the subject of much research and development in this country and abroad there remains room in this technology for substantial reduction in the cost of manufacture of these cathode ray tubes.

SUMMARY OF THE INVENTION

Accordingly, the purpose of this invention is to reduce the cost in manufacture of line-screen beam-index cathode ray tubes in general and beam-index color kinescopes in particular. The invention resides in new beam-index target screen structures and methods of construction thereof. In one aspect of the invention the target screen is provided on its inside surface with ribs, projections, or other indicia which are used as fiducial

markers to simplify the registration of the color producing strips with the index signal producing strips. These ribs or indicia may be molded with the faceplate of the tube or they may be supported on the faceplate at a later stage in manufacture.

In another aspect of this invention, an elongated or "ribbon" light source, derived from a transparent sheet of scintillator material, is used in a "lighthouse" to increase the speed of production when photoresist methods are used to deposit the phosphor strips. The sheet of scintillator is excited over a large surface to improve its capture area, thereby permitting large sources of ultraviolet excitation to be used. In modified form, this same type of scintillator sheet can be used to replace the "point" source of light conventionally used in prior art methods of screen construction by the photo method. Ths invention also teaches the use of servo-controlled printing techniques for laying down the line screen wherein the ribs, projections, or other indicia of the target screen are employed to guide the brushes or jets used in the screen printing process.

BRIEF DESCRIPTION OF THE DRAWING

FIG. **1** depicts a cathode ray tube in a cabinet with an index signal detector feeding optical index signals into a chasis located beneath the tube.

FIG. **2** is a front view, enlarged, of the target screen on the inside of the faceplate of the tube of FIG. **1.**

FIG. **3** is a cross-section of a typical target screen and faceplate.

FIG. **4** also is a cross-section of the target screen and faceplate, with an aluminum layer on the back of the phosphor strips.

FIG. **5** illustrates a roller for scraping (or coating) the rearwardly facing edge of index signal supporting ribs or filaments.

FIG. **6** illustrates a conventional light source, and alternatively a novel elongated scintillator light source, positioned on the outside of the faceplate for activating or polymerizing selected photosensitive mixtures or layers in the process of target screen construction.

FIG. **6A** illustrates, in cross section, a rib or projection on the inside of the target screen which is molded integrally with the faceplate.

FIG. **7** illustrates a method of painting the phosphor strips directly on the faceplate. A plurality of brushes for producing one color triad and one index strip are shown guided by ribs or projections on the faceplate.

FIG. **8** is akin to FIG. **7** except that the guide pins for the phosphor brushes are positioned against both the ribs and the faceplate of the tube. Alternatively, an optical or electrical indicia sensing servo-control system is depicted for guiding the phosphor brushes or jets.

FIG. **9** illustrates the scintillator light source of FIG. **6** with its exit region at the focal point of a lens system. Also shown is a hollow funnel scintillator for providing a point light source.

DESCRIPTION OF THE PREFERRED EMBODIMENTS

In FIG. **1** a beam-index cathode ray tube (CRT) is shown with a faceplate **11** having a target screen **10.** The faceplate has an implosion panel **8** bonded thereto by a thin resin layer **9.** One form that the target screen **10** may take is shown in FIG. **2,** greatly enlarged, and is comprised of an array of index signal generating elements disposed in register with an array of different color producing phosphors **12B** (blue, **14R** (red), and **16G** (green). Ordinarily, but not necessarily, the electron beam from gun **7** of the CRT scans the phosphor strips at right angles in order to develop a color image suitable for viewing. The signals generated by the index strips are detected in the scintillator **6** thereby generating optical index signals which are converted into electrical signals by photodetector **5.** A plurality of windows **2** are provided for scintillator **6** in the opaque electrically conductive aquadag coating ordinarily deposited on the inside of the CRT funnel section. This coating (which alternatively may be of aluminum) is used to establish a uniform electric field inside the tube. To help keep stray light out of the scintillator and the photodetector, the CRT is housed in a cabinet **4** containing a chassis **3** which houses the photodetector **5.** The index signals, and the optical index signals derived therefrom, generally are used to indicate the position of the electron beam on the target screen. For color television receivers these index signals are used to control the sequential excitation of the different color producing phosphor strips.

FIG. **3** is an enlarged view of section **3—3** taken through the target screen of FIG. **2.** Glass faceplace or substrate **11** has deposited on its inside surface the blue, red, and green color producing strips **12B, 14R,** and **16G** separated by ribs or projections **18.** Associated with these ribs are the index signal generating elements. Projections **18** may also be strands of a mesh-like structure as disclosed in applicant's co-pending U.S. Pat. applications Ser. No. 85,353 and U.S. Pat. Ser. No. 345,197, supra. The resin layer **9** and implosion panel **8** of FIG. **1** are also illustrated in FIG. **3.** In one embodiment rib **18** is optically and mechanically continuous with faceplate **11.** This is illustrated at **17.** It is preferred in this case that the ribs **18** be molded at the same time that the front panel is pressed. In this embodiment, index signal generating element **21** is shown supported on rib **18.** Typically, element **21** is the phosphor designated **P–16** which emits radiation in the ultraviolet peaking at about 3,800 Angstroms. In another embodiment, rib **18** may be secured to the faceplate after it is pressed as shown at **19.** In this case, the rib **18** may be comprised of material selected from one of the electron-sensitive scintillating glasses. Hence, no additional element akin to **21** is shown at **19.** If the scintillator rib is opaque or absorptive of its own radiation, then detection of the index signal best takes place rearwardly of the screen as by scintillator **6** of FIG. **1.** If the rib is transparent to its own radiation, however, the index signals may be light piped to an edge of the target screen as set forth in applicant's U.S. Pat. Ser. No. 485,017. In FIG. **3,** the ribs **18** are in register with the color producing phosphor strips and physically separate the strips into triads. The ratio of color strips to index strips can be varied from the 3:1 relationship illustrated and more than one index signal generating material can be used.

In FIG. **4,** a target screen akin to that in FIG. **3** is shown. An electron transparent, electrically conductive, light reflective aluminum layer **22** is disposed on top of the color producing phosphors **12B, 14R,** and **16G** to increase the brightness when high voltages are used on the target screen. When a scintillating glass transmissive of its own radiation is used for rib **18** the aluminum layer may extend over the rib as depicted at

25. In this case, the optical index signals are transmitted transversely of the faceplace 11 through rib 18 to a suitable exit terminal. When a scintillating glass is not used, or for other reasons, layer 22 may also cover the rib 18 as depicted at 24. In this case, to radiate index signals rearwardly index signal generating element 23 is deposited on top of layer 24. Alternative embodiments are shown by ribs 27 and 27^1. Rib 27 does not physically separate the color producing phosphor strips into triads as do ribs 18 but is supported by one of the strips. Also, rib 27^1 straddles a pair of color producing strips; and may be disposed rearwardly of the aluminum layer 22.

FIGS. 5–8 illustrate different methods of constructing the target screens of FIGS. 3 and 4. Thus, in FIG. 5 an array of three different color producing phosphor strips is shown on the faceplate 11. Using the well known photo-resist method the phosphors can be mixed with phtoo-sensitve carriers to form a slurry or, alternatively, the phosphors can be dusted on or otherwise applied after a photo-sensitive layer is deposited and exposed. Exposure of the photo-sensitive material can be through the faceplate 11, or from the inside thereof. Three successive series of steps are involved, one series for each color. The layer must be applied, exposed with careful registration of an optical master, and then developed to remove the unhardened material. Ordinarily, in making a screen for a shadow-mask tube the faceplate is rotated and tilted to apply the photo-sensitive layer. This rotating motion should be changed to a reciprocating motion so that the ribs 18 do not interfere with the smooth application of the photo-sensitive layer. If the ribs are applied after the color phosphors are deposited the slurry can be rotated and tilted. The next step is to lay down the index material, akin to 21 of FIG. 3 or 23 of FIG. 4. In a three layered screen this can be a difficult and tedious task as attested to by Saulnier and by applicant's own experience. Also, in a conventional three layered screen the index strip is deposited last so that any imperfection in this step is very expensive. It wastes the time and effort involved in laying down the three phosphors and the thin aluminum layer. To avoid these difficulties, and therefore to increase production yield, this invention calls for the direct application of the index phosphor to the raised rib. Thus, roller 26 in FIG. 5 depicts the mechanical application of index phosphor 20 to the ribs 18. This is a simple but extremely advantageous use of this aspect of the invention. Note that although aluminum layer 22 is not shown in FIG. 5 it may be used if desired and is best applied before the use of the roller coating.

In FIG. 6, a photographic technique is illustrated for depositing the index strips. This may be desirable when the curvature of the faceplate, or some other consideration, rules out the use of the mechanical application of the index phosphor. The photo-sensitive layer may be applied to the ribs 18 by spray or slurry or it may be otherwise deposited. Radiation from ultraviolet source 28 is transmitted through the front of the panel, or it may come from the rear to polymerize the photo-sensitive layer. The two advantages in exposing from the front, as shown, are that (1) the color producing phosphor strips attenuate the ultraviolet light and (2) the layer next to the glass polymerizes first. Item (1) helps keep index material off the color phosphor region of the screen (if necessary, a temporary yellow dye can be added to the color phosphors to further suppress the blue and ultraviolet transmission) and item (2) provides for better adhesion of the phosphors to the faceplate and less criticality in exposure time. Another advantage of frontal exposure, in fact the greatest advantage when the photo-resist process is used for screen deposition, is that the faceplate and funnel section can be joined by flame sealing prior to screen construction. This eliminates the need for frit-sealing which is very slow and may run as much as four hours; and it eliminates the need for (and costs incurred in) grinding the glass surfaces which are to be frit sealed. photo-application substantially

Thus, the use of the raised rib 18, whether for direct application of the index phosphor or for photo-application of the index phosphor, substantially improves the process of making beam-index target screens for color kinescopes.

A special consideration arises when the photo-method is used from the front of the faceplate and this will be explained with respect to FIG. 6 taken in conjunction with FIG. 6A and FIG. 4. In FIG. 4 the color producing triads 12B, 14R, 16G are affixed to the faceplate. aluminum layer 22 is on top of the color triads; and is on top of rib 18 as depicted at 24. The question arises as to how the radiation from ultraviolet source 28 (FIG. 6) can penetrate the aluminum layer 22 so as to harden the photo-resist to secure index material 23 to the top of aluminum layer at 24.

There are a number of answers as follows: First, I have discovered by direct observation, and Saulnier confirms that a smooth and continuous aluminum layer as conventionally applied to a CRT screen has a degree of transparency. This means that with sufficient exposure time and intensity of illumination the index phosphor 23 can be affixed on the rearward side of the aluminum layer 22. Second, the aluminum layer can be scraped off the rib by a suitable abrasive or polishing tool. And third, as depicted in FIG. 6A the rib 18 can be contoured or sharpened to cause the aluminum layer 22 to break at the region where index phosphor 23 is to be applied.

It is desirable, in any event, to increase the intensity of radiation used in the photo-resist process. Frequently, to deposit the color emitting phosphors by this process in a shadow-mask tube a 1000 watt high pressure mercury arc light source is used. This type of mercury arc generates ultraviolet and blue-white visible radiation for exposure of the photo-resist through the apertures in the shadow mask. Special quartz optics are used to concentrate the light. The overall efficiency is low and water cooling is required to remove the heat which is dissipated. This source of light requires several minutes for proper exposure. The exposure must be repeated for each color phosphor, or index strip, that is deposited by the photo-method. In large volume production this is a very time consuming and expensive operation.

In this invention, the linear shape of the phosphor strips to be deposited and the unique properties of plastic scintillators are combined to reduce exposure times. Thus, ultraviolet light source 28 is shown in FIG. 6 in cylindrical form surrounded by a specially shaped plastic scintillator 29. Space is provided between the scintillator and lamp for air cooling. For example, a thin sheet of scintillator material can be bent to surround light source 28 so that opposite edges of the sheet meet

as depicted in the drawing. The ultraviolet radiation from mercury vapor lamp **28** strikes the side walls of sheet **29** and causes it to scintillate internally. The optical radiation thus generated is transmitted by internal reflections in scintillator **29** to exit terminal **30.** Terminal **30** thus constitutes an elongated or ribbon light source and is positioned parallel to the strips of the target screen. To appreciate the advantages gained by this arrangement in reducing exposure time from that required with a point source of light typical dimensions of the combination of FIG. **6** are cited as follows: the faceplate **11** is 12 inches high, as is the scintillator sheet **29.** The thickness of sheet **29** is approximately 0.015 inches. The resultant light source is 12 × 0.030inches. This represents an improvement of 12/0.030 or 400 over a point source of light measuring 0.030 × 0.030 inches. Evidently, the larger the screen and the longer the light source, the greater is the improvement.

Mercury vapor lamp **28** canbe high pressure or low pressure and it can be short wave or long wave. Scintillator **29** is available from Nuclear Enterprises, San Carlos, California, and can be identified as their NE–102 and NE–111. Alternatively, reference is made to Hyman U.S. Pat. No. 2,710,284 for details on plastic scintillators. The quantum efficiency of these scintillators approaches 100 percent. The light loss through the side walls is acceptable. But even at that, a second layer transmissive of its own scintillations, such as **31,** can be used to respond to and capture the radiation from the side wall of **29.** The light loss through internal reflections is low. Finally, the scintillations of NE–**103** are blue-white which means its transmission through the faceplate of ordinary CRT glass is high, and its ability to polymerize the photo-sensitive medium is good. Therefore, a much improved light source is provided for making strip-like target screens.

A number of variations in the light source and its use are described with reference to the drawings. In FIG. **6** light emitting strip **30** is on the outside of the faceplate **11,** is adjacent thereto, and is in line with rib **18** which supports the photo-sensitive material. Light emitting strip **30** can be stepped along the faceplate to be in register with each rib **18** in sequence, or it can be placed at a distance from the faceplate to expose the resist through mask **60.** In the latter case, openings **61** in the mask **60** may be provided in register with the ribs **18.** These openings are displaced from the ribs depending upon the distance that separates source **28** from faceplate **11.** The arrangement shown is for so called parallel light input. The best mode however from the point of view of reducing exposure times is to provide a plurality of light emitting strips adjacent to the faceplate with one light emitting strip in register with each strip of photo-resist to be illuminated. This can be done by having a plurality of scintillator sheets akin to **29** formed into a jig or fixture which mates with the surface of the faceplate. The sheets can be stacked, like pages spread in an open book, to receive the input radiation over a broad surface thereof. FIG. **9** shows light strip **30** to the focal point of a lens system. The output of the lens is substantially parallel light. The light source of FIG. **9** can provide a large area collimated beam to irradiate the entire faceplate area; or it can be made smaller and positioned closer to the faceplate on the target screen. Lastly, a funnel shaped plastic scintillator **51** is illustrated in side view in FIG. **9** with an exit region **52** corresponding to a point source. The scintillator **51** may surround the primary light source, akin to the arrangement of **29** and **28** or it may be excited by radiation which enters via opening **51** in the funnel, or it may be otherwise excited. Preferably, the funnel wall is tapered slightly to increase in thickness at the exit region **52.** The hole in the funnel at **52** should be closed to provide the maximum concentration of light output. Suitable primary sources of excitation are the type ZA–1 high pressure mercury arc lamps supplied by the Zenith Radio Research Corporation (having an arc discharge length of approximately 1 inch) and the type B116 high pressure mercury arc lamp of the General Electric Company. Naturally, other sources of primary radiation can be used to excite the scintillator such as for example short arc air cooled mercury lamps and plasma sources seeded with zinc which has strong lines in the 3,300 Angstrom region. A faceplate with shadow mask and frame assembly is depicted at **54** to receive illumination from the funnel **51** via its exit terminal **52.**

As desirable as the foregoing arrangements are, it will be noted that except for the direct application of index phosphor by the roller process of FIG. **5** they all involve the photo process. This is a highly developed art and the photo process produces extremely useful results. But, it is slow, critical as to exposure, and consumes much production time. Furthermore, the depositions of the phosphor strips are sequential so that if the last deposition is defective the production results previously achieved are of no lasting benefit. Accordingly, the arrangements of FIGS. **7** and **8** are presented which dispenses with the photo process in the fabrication of line screen beam-index target screens.

Thus, in FIG. **7** a method is illustrated for printing the phosphor strips on substrate or faceplate **11.** A jig or fixture **40** holds a plurality of brushes which apply, simultaneously, the index material and color producing phosphors. Index brush **32** applies the index material, brush **34B** applies the blue phosphor, brush **36R** applies the red phosphor, and brush **36G** applies the green phosphor. All four brushes are held in alignment by fixture **40** which also feeds the phosphor paints to the brushes. The four strips are guided into register with the rib **18** by roller **42** secured to fixture **40.** The use of rib or projection **18** for this purpose is novel and advantageous. The rib both supports the index material and guides the brushes to maintain proper alignment and register of the color producing and index signal producing strips. When high voltages are to be applied to this target screen a foraminous electrically conductive mesh may be applied as for example by Saulnier's teachings. Alternatively, if a smooth and continuous aluminum layer akin to **22** is desired beneath the index material the brushing is accomplished in two steps. The brushes **34B, 36R,** and **36G** deposit the blue, red, and green phosphors. The aluminum layer is deposited. Then index brush **32** applies the index material. Fixture **40** may apply a single group of phosphors, or preferably it may apply a plurality of groups of phosphors by suitably extending its length. In addition to brushing, per se, other methods of phosphor application may be used such as flame spraying and/or electrostatic spraying. Also, applicant's prior teachings of using a rollable target screen may be used. In each case, advantage is taken of the guiding feature of ribs or projections **18** to gain proper registration of the strips on the faceplate.

FIG. 8 is akin to FIG. 7 except that fixture 40 is guided by both the rib 18 and the faceplate 11. Thus, roller 44 is brought into position at the corner of rib 18 and the faceplate 11 by spring forces depicted at 41 at 43. Indicia 45 on the interior of the faceplate 11 may be used (instead of rib 18) in combination with servo-control means 62. Indicia 45 may be electrically conductive frit embedded in or deposited on the faceplate, or it may be a strip optically distinctive from the surround of the faceplate. Hence, electrical or optical feelers may be used to guide feedback controlled means 62 in the printing of the phosphor strips. Typically, the phosphor strips are applied in a thickness of approximately 0.001 inches. Accordingly, if the indicia 45 is less than or not too much greater than 0.001 inches an electrically conductive layer, comprised of a foraminous mesh, can be mounted directly on the phosphor strips. This provides stabilization of the voltage on the target screen and permits the index radiation to be transmitted rearwardly of the target screen to the scintillator detector 6 of FIG. 1. Indicia 45 may be the index strip itself. Generally, the spray technique is preferred to brush application when the target screen is constructed on a faceplate with a non-flat or spherical surface.

For details on flame spraying, reference is made to Smith U.S. Pat. No. 2,861,900, Mondain-Monval U.S. Pat. No. 3,235,700 and Inoue U.S. Pat. No. 3,358,114. For embedding phosphors in a metallic target screen see Holowaty U.S. Pat. No. 3,177,361. For details on electronic control of printing inks and phosphors, reference is made to the A.B. Dick Company "Videojet" process and Automation Magazine, page 90, May 1968. The "Videojet" process essentially employs a small metal chamber, about one-eighth inch in diameter and one-half inch in length, and having an orifice of 0.002 inch to 0.003 inch at one end. If such an assembly is connected to a source of pressurized ink, it will be discharged through the orifice as a non-uniform spray, very much like a garden hose. However, if the assembly is energized by a source of ultrasonic energy, such as a coil driven by an alternating current or a piezoelectric crystal, the ink will be discharged from the orifice as a stream of droplets of uniform diameter and at a rate equal to the frequency of the energizing signal. For example, if the assembly is driven at 75Kllz, the ink stream will comprise 75,000 droplets per second. If the stream is generated through a 0.002 inch orifice, the resulting spot on a piece of paper will be in the order of 0.010inch in diameter. See also Diprose U.S. Pat. No. 3,404,280 and Loughren U.S. Pat. No. 3,414,221.

Returning to FIGS. 2 and 3, resin layer 9 and implosion panel 8 are added to the faceplate of the tube as one of the final steps in the production of a color kinescope. The properties of panel 8 and layer 9 take on additional meaning in a beam-index system. Conventional faceplate glass (Corning 9019 clear; 9024 tinted, polished, 40 percent transmission; 9026 tinted, polished, 50 percent transmission) is transmissive of radiation occupying a narrow region of the ultraviolet spectrum from approximately 3,600 – 4,000 Angstroms. But this is precisely the wavelength region in which the P–16 phosphor (calcium magnesium silicate) radiates in response to electron bombardment; and radiation in this range of wavelengths excites the scintillator detector 6.

I have observed that even though the target screen is composed of an opaque layer of phosphors and a light reflective aluminum layer is mounted on top thereof that nevertheless a certain amount of visible radiation is transmitted through the target screen and faceplate assembly. Saulnier estimates the transmission to be in the order of 3 percent. I have not made this measurement. But, I have measured the effects of daylight (and artificial illumination) on the scintillator 6 and photodetector 5. The ultraviolet component of this illumination is transmitted through the glass faceplate, the target screen, and the funnel of the CRT. It strikes scintillator 6 and shows up as random noise which masks the index signal in the output of the photodetector. This is most undesirable. Fortunately, there is a simple solution. I have found that some of the resin layers conventionally used to bond panel 8 to faceplate 11 has the exact transmissive properties needed. This resin layer transmits visible radiation above 4,000 Angstroms as desired, and attenuates the noise generating ultraviolet radiation from 3,500 to 4,000 Angstroms. Thus, resin layer 9 performs the additional important function, apparently not heretofore recognized, of blocking undesirable ultraviolet radiation from exciting the plastic scintillator 6 disposed rearwardly of the target screen. This improves the signal to noise ratio in the index circuitry 5 and permits synchronizing the beam-index circuitry (not shown) with lower electron beam currents. This in turn provides or greater contrast and brightness in the reproduced image. Schwartz U.S. Pat. No. 3,382,393 refers to the resin layer. Alternatively, the faceplate or implosion panel can be made with special glass to achieve the results of attenuating all optical radiation to which the scintillator is responsive. Another alternative is to use NE–102, the very material from which scintillator 6 is made, as the faceplate filter. This material sharply attenuates ultraviolet radiation below 4,000 Angstroms and is highly transmissive of visible radiation. Indeed, it is this unusual property which enables scintillator 6 to be used without suffering interference from the visible content of the picture which is produced on the target screen.

Having described my invention, I claim:

1. A light pipe-scintillator for detecting electromagnetic radiation having the shape of a funnel in which the thickness of the wall is substantially constant over the length of the funnel so that the interior and exterior sides of the funnel wall can be considered parallel to each other; whereby optical radiation, generated in the interior of the funnel wall in response to excitation by the radiation to be detected, is accumulated via light pipe action and concentrated at the narrow end of the funnel.

2. The device of claim 1 wherein the funnel dimensions are such that the interior surfaces at the narrow end of the funnel are juxtaposed.

3. The device of claim 1 wherein said light pipe-scintillator is responsive to ultraviolet radiation.

4. The device of claim 1 wherein said light pipe-scintillator is responsive to ultraviolet radiation of approximately 3,800 Angstroms wavelength.

5. An article in accordance with claim 1 wherein the wall has a taper which gradually increases the wall thickness towards the narrow end of the funnel.

6. The device of claim 5 wherein the funnel dimensions are such that the interior surfaces at the narrow end of the funnel are juxtaposed.

7. The device of claim 5 wherein said light pipe-scintillator is responsive to ultraviolet radiation.

8. The device of claim 5 wherein said light pipe-scintillator is responsive to ultraviolet radiation of approximately 3,800 Angstroms wavelength.

9. In the method of manufacture of target screens for cathode ray tubes, an efficient and concentrated light source comprising: an ultraviolet radiation emitting lamp disposed to emit its radiation upon a sheet of scintillator material responsive to said radiation thereby to generate optical radiation which is transmitted in the scintillator via a series of internal reflections, said sheet of scintillator also having an edge from which the optical radiation emerges thereby to provide a concentrated source of light.

10. The combination of claim 9 including a second sheet of scintillator material substantially surrounding the ultraviolet responsive scintillator and being responsive to the optical radiation emerging from the side walls thereof.

11. The combination of claim 9 wherein the ultraviolet emitting lamp is cylindrical in shape and a major portion of the sheet of scintillator is in the shape of a cylinder surrounding the lamp and spaced therefrom to permit air-cooling.

12. The combination of claim 9 wherein the sheet of scintillator has a major portion thereof in the shape of a funnel.

13. The combination of claim 12 wherein the shape of the inside narrow end of the funnel is such that the side walls are brought together thereby to furnish the light source with a solid area from which the optical radiation emerges.

14. The combination of claim 12 wherein the walls of the funnel are tapered to increase in thickness at the small end of the funnel.

15. A light source comprising in combination a primary source of electromagnetic radiation and a scintillator material responsive thereto wherein said scintillator material is (1) positioned to be impinged upon and excited by the primary radiation, (2) is shaped to form at least a major portion of a thin-walled frusto-conical light pipe, and (3) is transmissive of optical radiation generated in its interior region as a result of excitation by said primary radiation, whereby said optical radiation is accumulated via light piping action within said thin-walled light pipe to emerge at its narrow exit region in concentrated form.

16. The combination of claim 15 wherein the thin-walled light pipe has a taper which gradually increases the wall thickness towards the narrow end thereof.

17. The combination of claim 15 wherein said primary radiation is in the ultraviolet region of the spectrum.

18. The combination of claim 15 wherein said primary radiation has an intensity peak at about 3800 Angstroms wavelength.

19. An elongated scintillator-derived light source comprising in combination a primary source of exciting radiation and a scintillator material responsive thereto wherein said scintillator material (1) has a relatively broad surface area positioned to be impinged upon and excited by the primary radiation, (2) is shaped to form at least one surface of a sheet-like light pipe having also at least one relatively narrow exit region, and (3) is transmissive via light piping action of optical radiation generated in its interior region as a result of excitation by said primary radiation, whereby said optical radiation is accumulated within said sheet-like light pipe to emerge at the relatively narrow exit region thereof in a concentrated and ribbon-like form; said light pipe being further characterized by a taper which gradually increases its thickness in the direction of said narrow exit region.

20. The combination of claim 19 wherein said primary radiation is in the ultraviolet region of the spectrum.

21. The combination of claim 19 wherein to further increase its capture area the scintillator material surrounds the primary source of exciting radiation.

22. The combination of claim 19 in the method of manufacture of a line screen cathode ray tube which includes the feature of using the ribbon-like source of light to polymerize selected portions of photo-sensitive material thereby to produce strip-like lines on the screen.

23. In the method of manufacture of line screen faceplates for cathode ray tubes, an efficient and concentrated elongated light source comprising: a primary source of exciting radiation; a relatively broad sheet of scintillator material responsive to said exciting radiation, positioned so as to be impinged upon and penetrated by the exciting radiation over a substantial area thereof; whereby optical radiation, generated inside the broad sheet of scintillator material, is transmitted via a series of internal reflections throughout the scintillator material, said sheet having a relatively narrow exit region which furnishes a concentrated source of light.

24. The combination of claim 23 wherein said broad sheet of scintillator material has a portion thereof which is in the form of a thin-walled hollow cylinder.

25. The combination of claim 24 wherein the source of exciting radiation is an ultraviolet emitting lamp disposed within the thin-walled hollow cylinder.

26. The combination of claim 25 wherein the ultraviolet lamp is elongated and is substantially the same length as the thin-walled hollow cylinder.

27. The combination of claim 23 wherein said primary source emits ultraviolet radiation to which the sheet of scintillator material is responsive.

28. The combination of claim 23 wherein the broad sheet of scintillator is tapered so that its thickness increases gradually in the direction in which the optical radiation is transmitted towards the narrow exit region.

29. The combination of claim 23 wherein a plurality of the concentrated and elongated light sources are arranged in a spaced apart array in order to polymerize selected portions of a photosensitive material thereby to produce a matching array of strip-like lines on the inside of the faceplate of the cathode ray tube.

* * * * *