May 17, 1966 E. H. HUGENHOLTZ 3,251,975

ELECTRODE FOR HIGH FREQUENCY HEATING

Filed June 24, 1963

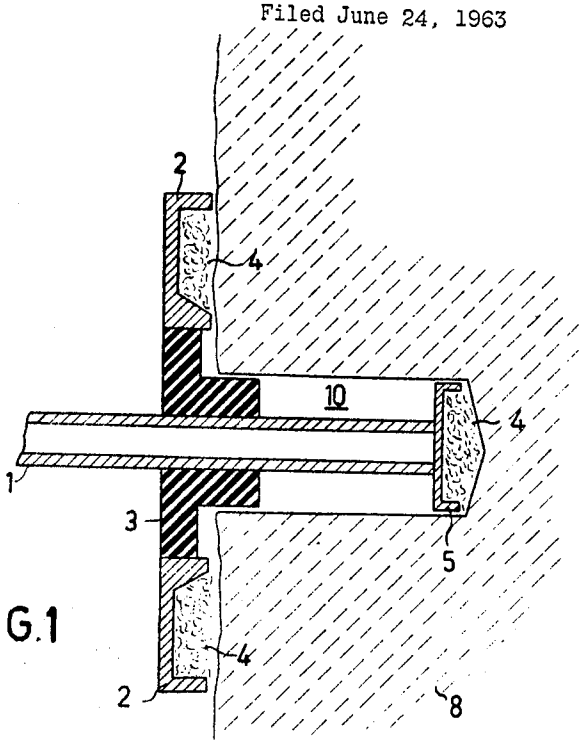

FIG.1

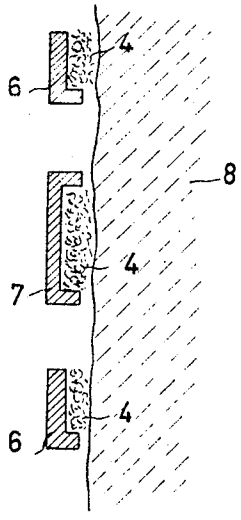

FIG.2

INVENTOR.
EDUARD H. HUGENHOLTZ
BY
Frank R. Trifari
AGENT

United States Patent Office

3,251,975

Patented May 17, 1966

3,251,975

ELECTRODE FOR HIGH FREQUENCY HEATING

Eduard H. Hugenholtz, Willowdale, Ontario, Canada, assignor to North American Philips Company, Inc., New York, N.Y., a corporation of Delaware

Filed June 24, 1963, Ser. No. 289,934
Claims priority, application Canada, July 28, 1962, 854,800
7 Claims. (Cl. 219—10.57)

This invention relates to electrodes for applying high frequency electromagnetic energy to dielectric materials for heating purposes, and more particularly to electrodes which are suitable for the application of the high frequency energy to uneven surfaces such as concrete, rocks or like material.

In order to achieve the desired heating effect, it is necessary to apply a concentrated heating power in a relatively small volume so that a substantial temperature rise may be produced in a short time and thus produce cracks due to localized thermal expansion. In order to achieve high power concentration, i.e. field concentration, at least one of the electrodes used for applying the power must provide a small area of contact and a high voltage must be employed.

The electric field should spread out from the small electrode so that the field intensity at a distance from the electrode is low. This requires that an electrode having a relatively large contact area be employed in conjunction with the small area of the field concentrating electrode.

A further consideration is that too high a voltage gradient across the surface of the material being heated will result in surface arcing and power losses. It is also necessary that a low resistance connection be made between the small electrode and the surface to prevent local hot spots or arcing at this electrode.

It is, therefore, an object of this invention to provide a low resistance contact for the application of high frequency energy to an uneven dielectric surface for heating of same.

In carrying out the invention, the electrode comprises a holder provided with a metal wool of low resistance which acts as the intermediary conductor between the dielectric surface and the conductor of a high frequency energy supply source.

The invention will now be described with reference to the figures of the drawing wherein:

FIGURE 1 is an electrode system incorporating the invention which is adapted to supply radio frequency energy between a drill hole and an outside surface of the dielectric material and,

FIGURE 2 is an electrode system for applying radio frequency energy to spaced points on the surface of a dielectric material to be heated.

Referring now to FIGURE 1, a hole **10** is shown in a dielectric material **8**, for instance, concrete, and high frequency electromagnetic energy is applied thereto by an electrode comprising a central conductor **1**, which may be the center conductor of a coaxial cable, having a dish-shaped end piece **5** with its open end facing the inner end of the drill hole. A metal wool **4**, for instance copper, is squeezed between the piece **5** and the end of the drill hole and, due to its resilience, makes contact over the entire end surface of the drill hole.

A further electrode **2**, in the form of an annular trough faces the outer surface or wall of the dielectric material surrounding the central conductor **1**. An insulator **3**, of very low dielectric loss, fixes the electrode **2** with respect to conductor **1** and insulates it therefrom. The annular trough electrode **2** is filled with a metal wool **4** which provides the contact between that electrode and the outer

surface of material **8**. When high frequency energy is applied between electrodes **2** and **5**, the dielectric material **8** between these two electrodes is heated and the expansion causes cracking or shattering of the material. Electrode **2** can, in itself or by additional means, prevent shattered material from flying out of the surface of the material.

In FIGURE 2, the central electrode **7** may be quite similar to electrode **5** of FIG. 1, and the annular electrode **6** may be similar to electrode **2**. It is readily apparent that an electrode system such as shown in FIGURE 1 can be provided with a retractable central electrode to allow for variations in hole depth and also allow use of the system on a relatively flat surface. It is not necessary that one electrode, such as **2** or **6**, be annular, but this is a preferred embodiment. For instance, two electrodes, similar to the central electrode **4**, **5** of the unit shown in FIGURE 1 may be employed for the two active electrodes provided, of course, that the contact area of one electrode is greater than that of the other. Two drill holes are then provided to facilitate their use. In this manner a concentrated field can be set up in the material between the two drill holes.

What is claimed is:

1. Apparatus employing high frequency electromagnetic energy for heating a dielectric body, comprising an inner electrode having a resilient contact surface comprising a conductive metal wool, a spaced outer annular electrode concentric with said inner electrode and having a resilent contact surface comprising a conductive metal wool, said apparatus being positionable so that said inner electrode contact surface and said outer electrode contact surface bear against the surface of said body, and means for supplying said high frequency energy to said first and second electrodes thereby to establish an electric field in said body between said electrodes.

2. Apparatus for fracturing a brittle dielectric body by means of high frequency electromagnetic energy, comprising an inner and an outer electrode for applying said high frequency energy to said body, said outer electrode comprising an annular conductive member concentric with said inner electrode and having a resilient contact surface at one end thereof comprising a conductive metal wool, said inner electrode comprising an elongated conductive member longitudinally positioned within said outer electrode and having a dish-shaped portion at one end thereof, a conductive metal wool positioned within said dish-shaped portion so as to form a resilent area of contact with said dielectric body, and means for supplying said high frequency energy to said first and second electrodes thereby to establish an electric field in said body between said electrodes.

3. Apparatus for fracturing a brittle dielectric body by means of high frequency electromagnetic energy, comprising an inner and an outer electrode for applying said high frequency energy to said body, said outer electrode comprising an annular conductive member disposed in a plane and having a resilient contact surface at one end thereof comprising a conductive metal wool, said inner electrode comprising an elongated conductive member concentric with said outer electrode and radially spaced therefrom, said inner electrode extending beyond the plane of said outer electrode for insertion in a recess in said body and having a concave surface at its operative end, a conductive metal wool positioned within said concave surface portion so as to form a resilient area of contact with said dielectric body, and means for supplying said high frequency energy to said first and second electrodes thereby to establish an electric field in said body between said electrodes.

4. Apparatus for fracturing a brittle dielectric body by means of high frequency electromagnetic energy, com-

prising an inner and an outer electrode for applying said high frequency energy to said body, said outer electrode comprising an annular conductive member disposed in a plane and having a resilient contact surface at one end thereof comprising a conductive metal wool, said inner electrode comprising an elongated conductive member concentric with said outer electrode and radially spaced therefrom, said inner electrode extending beyond the plane of said outer electrode for insertion in a recess in said body and having a concave surface at its operative end, a conductive metal wool positioned within said concave surface portion so as to form a resilient area of contact with said dielectric body, said outer electrode having an area of contact with said dielectric body which is greater than the contact area of said inner electrode with said body, said apparatus further comprising means for longitudinally moving said inner electrode with respect to said outer electrode at right angles to the plane of contact of said outer electrode thereby to alter the distance said inner electrode extends beyond the plane of said outer electrode, and means for supplying said high frequency energy to said first and second electrodes thereby to establish an electric field in said body between said electrodes.

5. Apparatus employing high frequency electromagnetic energy for heating a dielectric body comprising first and second spaced apart electrodes for applying said high frequency energy to said body, said first electrode comprising a conductive member terminating in an end portion comprising a conductive metal wool in the form of a porous mass of randomly oriented metal fibers arranged to provide a low resistance resilient contact area between said first electrode and a portion of said body having a very irregular shape, said second electrode comprising a conductive member terminating in a body contacting portion having a surface contact area which is substantially larger than the contact area of said first electrode, said second electrode being arranged to contact a portion of said body spaced from said resilient contact area, and means for supplying said high frequency energy to said first and second electrodes thereby to establish a high frequency electric field in said body which is more highly concentrated in the vicinity of said first electrode than in the vicinity of said second electrode.

6. Apparatus employing high frequency electromagnetic energy for heating a dielectric body, comprising an inner and an outer electrode for applying said high frequency energy to said body, said inner electrode comprising a conductive member having a resilient contact surface provided at one end thereof comprising a highly porous conductive metal wool, said outer electrode comprising an annular conductive member concentric with said inner electrode and arranged to contact a portion of said body spaced apart from the point of contact of said inner electrode with said body, and means for supplying said high frequency energy to said first and second electrodes thereby to establish an electric field in said body between said electrodes.

7. Apparatus as described in claim 6 wherein said wool is composed of copper.

References Cited by the Examiner

UNITED STATES PATENTS

2,422,525	6/1947	Brown et al.	219—10.81 X
2,465,102	3/1949	Joy	219—10.81 X
2,467,636	4/1949	Stoudt et al.	219—58
2,506,626	5/1950	Zottu	219—10.81 X
3,113,202	12/1963	Nolen et al.	219—92

FOREIGN PATENTS

624,329	6/1949	Great Britain.
632,690	11/1949	Great Britain.
647,762	12/1950	Great Britain.

RICHARD M. WOOD, *Primary Examiner.*

L. H. BENDER, *Assistant Examiner.*