Aug. 20, 1963 T. STEVENSON ETAL 3,101,054

ELECTRICALLY INITIATED SPOTTER TRACER BULLET

Filed Oct. 5, 1960

Fig. 1

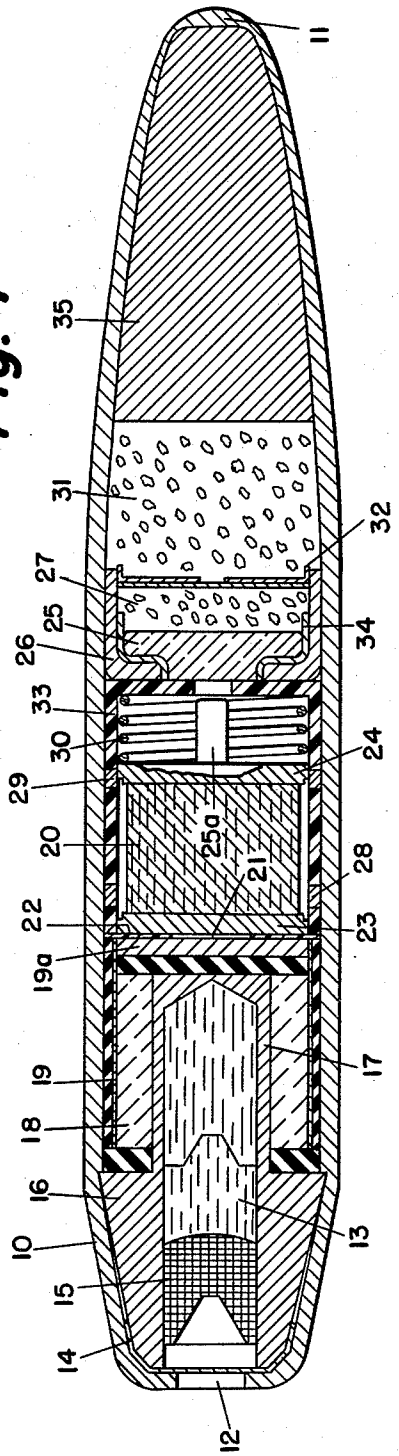

Fig. 2

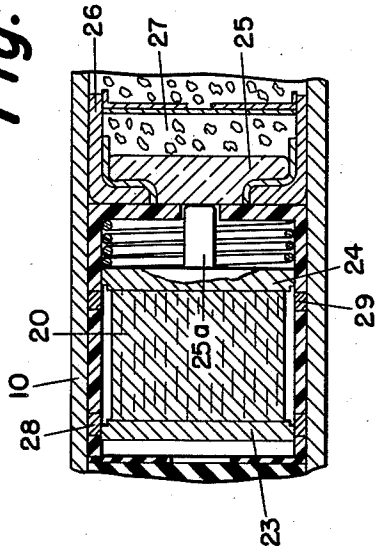

INVENTORS
THOMAS STEVENSON
WINSTON W. CAVELL
WILLIAM A. DISCHERT
BY
S. J. Rotondi, A. T. Rupert & S. Patroff
ATTORNEYS.

United States Patent Office

3,101,054

Patented Aug. 20, 1963

1

3,101,054
ELECTRICALLY INITIATED SPOTTER TRACER BULLET

Thomas Stevenson, Huntingdon Valley, and Winston W. Cavell, Philadelphia, Pa., and William A. Dischert, Merchantville, N.J., assignors to the United States of America as represented by the Secretary of the Army

Filed Oct. 5, 1960, Ser. No. 60,758
7 Claims. (Cl. 102—60)
(Granted under Title 35, U.S. Code (1952), sec. 266)

The invention described herein may be manufactured and used by or for the Government for governmental purposes without the payment to us of any royalty thereon.

This invention relates to a small arms projectile and has for its object to provide a means of developing an electrical charge in the bullet for igniting a spotting type explosive on contact or on reduction of its velocity without stoppage of the projectile.

In spotting rifles, i.e., those affixed to a large caliber weapon usually of a recoilless type, there has long existed a need for ignition of the pyrotechnic spotting explosive on impingement of the projectile or a light graze impact on hard surfaces or soft mud in order that the gunner may be advised where the first hit occurs even though the projectile may not be stopped. Heretofore the spotting type explosives in such small arms projectiles have been of the type requiring a considerable impact force upon a somewhat unyielding surface.

According to this invention that old need has now been filled by providing a system within the projectile which will generate and hold sufficient electrical energy to fire the primer without the need to crush the projectile nose or have it sustain relatively heavy impact thus obtaining a higher reliability of function. The spotting explosive being fired in response to only a slight reduction in velocity of the projectile. More specifically a tracer composition in the rear of a projectile is ignited by the propellant blast on firing the spotting rifle. Around the tracer composition and close thereto for reception of heat and pressure from the tracer composition is a barium piezo electric crystal capable of generating a substantial voltage for charging an electric condenser before the crystal undergoes transition from the polarized to the unpolarized state by the action of pressure, crushing, or by heating the crystal to 120° C., its curie temperature. To prevent the charge generated from flowing back to the crystal a way of allowing current to flow in only one direction is provided such as a rectifier or a spark gap. The latter is preferred because of its simplicity and compactness. After the crystal reaches its curie temperature the condenser remains charged until velocity of the projectile is reduced suddenly even though only slightly and a switch is closed to supply current from the condenser to the electrically initiated primer and spotting type pyrotechnic explosive. To effect closure of such a switch the condenser is made bodily slidable to move one switch contact into engagement with a fixed contact on a small but sudden reduction in velocity.

Referring to the drawing,

FIGURE 1 discloses a longitudinal section through a preferred embodiment of this invention in a small arms projectile.

FIG. 2 shows the condenser in its forward position for firing the spotting mixture.

This projectile is provided with a usual jacket **10** of gilding metal or the like extending from its nose **11** to its rear end portion leaving an opening **12** into which a propellant flame may extend initially on firing to ignite a usual tracer composition **13**. A closure cup **14** of easily burstable or consumable material normally keeps out

2

moisture from the tracer composition **13** and its customary igniter or primer **15**. The container **16** for the tracer is thin walled at its forward portion **17** to facilitate the conduction of heat and pressure from the burning tracer to the inner surface of a barium titanate piezoelectric crystal **18** in cylindrical shape, a thin brass sleeve **19** surrounds the outside of the crystal to conduct current generated by heat and by pressure on the crystal to an electric condenser **20** via a spark gap **21** of .003 of an inch in size in a plastic insulating washer **22** of this thickness. During charging the circuit from the crystal is through brass plate **19*a***, the spark jumps the air gap **21** to the rear metal condenser lead **23** to the condenser **20**, through the front condenser lead **24** thence through front contact ring **29** to the jacket **10** and back to the crystal through the container **16** and **17**. After being charged to its maximum voltage the condenser undoubtedly loses some of its peak voltage back through the crystal until the voltage is not enough to jump the air gap.

The crystal **18** generates current due to both heat and pressure sufficient to generate a current of at least a thousand volts or more beginning during the travel of the projectile in the gun according to estimate and breaking down the air gap **21**. The crystal becomes inactive at a temperature of about 120° C., its curie temperature.

For discharge of the condenser, the circuit as shown in FIG. 2 is through the front condenser lead **24** and its forward projection contact **25*a*** to primer button **25**, primer mixture **27** primer cup **26** jacket **10**, rear contact ring **28** to condenser **20**. During discharge the forward contact ring **29** is not in contact with the forward condenser lead **24** as it was during charging.

The sensitivity of the projectile to a sudden reduction in its velocity depends to a large extent upon the strength of creep spring **30**. A light spring offers little resistance to a sudden reduction in velocity of only a small amount. Of course the condenser need only make contact and slide forward bodily with ease to discharge into the primer **27**. The mass of the condenser should be small enough so that a normal and gradual reduction in speed of the projectile will not cause it to slide forward and ignite the primer mixture **27** prematurely. The primer support metal cup **32** has a central opening closed by the consumable foil paper closing that opening and keeps the primer composition separate from the spotter composition **31** yet enables the primer flame to quickly penetrate and ignite the spotter mixture. The creep spring housing **33** and the primer insulation **34** are plastic material of which several types could be used successfully. The heavy lead slug **35** gives the .50 caliber spotting projectile greater momentum in order that its trajectory will more closely approach that of the projectile fired by the large caliber gun as is known in the art to be desirable.

It is believed that the temperature and pressure of the burning propellant alone and without any tracer composition being present should be enough to adequately charge the condenser during travel of the projectile within the gun, the tracer composition being left out, but the tracer gives added reliability. The normally slightly oversize projectiles should cause enough heat to be generated by the engraving operation of the rifling and friction to charge the condenser. In fact any source of heat or pressure would suffice to effectively energize the piezo crystal for charging of the condenser. A noteworthy feature of the embodiment illustrated is the fact that an ordinary tracer charge is the source of heat and pressure, and is sustained for a long enough time to overcome any delay there may be in getting the heat and pressure, either or both of them to be transferred through the thin wall portion **17** of the tracer container **16**. Instead of a tracer

mixture being ignited, a small charge of incendiary or a high explosive is also capable of activating the system.

A piezo electric crystal of flat and of shapes other than cylindrical may be used. So also more than one crystal may be desirable.

We claim:

1. In a spotting projectile having a body, an explosive therein in a forward portion of said projectile, and means for igniting said explosive, the combination therewith of the improvement in said igniting means whereby it may be responsive to a reduction in the velocity of the projectile of the type experienced in a graze impact, said improvement including a piezoelectric crystal responsive to heat and pressure applied to a surface of the crystal from a spotting rifle, an electrical condenser within said projectile behind said explosive, circuit means for charging said condenser from said crystal, said condenser constituting a weight slidable longitudinally in said projectile, an abutment fixed with respect to the projectile body, and against which said weight is held during the time its velocity is increasing during set back, a second abutment forwardly of said condenser and also fixed with respect to the projectile body, a spring engaging said weight and second abutment and of a strength to be substantially compressed by a reduction in velocity of the projectile before reaching a target and in excess of that to which the projectile is subjected in its free travel in its trajectory due to air resistance and weather conditions, a condenser discharge circuit for firing said explosive, said second abutment forming a portion of said condenser discharge circuit in response to a forward sliding movement of said weight and compression of said spring to a predetermined amount for closing said discharge circuit.

2. A combination according to claim 1 in which said condenser and said slidable weight are a functionally integral unit and said means for charging said condenser from said crystal includes a circuit having therein a spark gap of a size capable of being bridged by current from said crystal in advance of the crystal being heated to its curie temperature whereby thereafter there is no danger of the condenser losing its charge through said crystal and charging circuit.

3. A combination according to claim 2 in which said condenser discharge circuit includes a primer mixture adjacent said explosive, and a contact element carried by said slidable condenser weight for closing said discharge circuit through said primer mixture on compression of said spring due to a graze impact.

4. In a spotting rifle projectile having a spotting explosive composition in a forward portion thereof, and means for igniting said explosive composition, the combination therewith of the improvement in said igniting means for making it responsive to reduction in velocity of the projectile due to a light graze impact on hard surfaces or on soft mud, said improvement including a piezo-electric crystal responsive to heat and pressure applied to a surface of the crystal from said rifle, an electric condenser, electrical connections between said crystal and condenser for charging said condenser, a spark gap for opening said connections to prevent discharge of said condenser through said crystal, an abutment fixed with respect to said projectile against which said condenser is held during increase in velocity, another abutment forward of said condenser fixed to said projectile for holding said condenser during a reduction in velocity of said projectile, a light spring between said condenser and second mentioned abutment, a primer charge for igniting said spotting explosive, and another electrical circuit for firing said spotting explosive and primer charge in response to forward bodily movement of said condenser compressing said spring and closing said circuit for firing said primer and spotting explosive.

5. A projectile having a rear end permeable to pressure and heat of propellant gases within a gun from which the projectile is fired, said projectile containing an explosive in a forward portion thereof, a piezoelectric crystal located in rear of said explosive and in a rear portion of said projectile to receive heat and pressure from propellant gases during movement of the projectile within a gun on firing for generating an electric current, means for securing said crystal adjacent the rear end of said projectile against coming out of said projectile on set back, and means for effecting a delayed firing of said forwardly located explosive by electrical energy developed by said crystal well after said projectile has left a gun from which it is fired, said delayed action means for firing said explosive including heat and pressure from propellant gases on said crystal from a gun firing said projectile, an electric condenser, a circuit between said crystal and condenser, a small air gap in said circuit of a size to break down under voltage developed by said crystal and charge said condenser until said crystal reaches its curie point after which said gap precludes discharge of the condenser through an impaired crystal which has reached its curie temperature.

6. A small arms projectile containing a tracer composition, a piezoelectric crystal around said composition and close enough thereto to apply heat and pressure to a surface of said crystal developing during ignition of said tracer composition, an electric condenser in front of said crystal and longitudinally slidable within said projectile, an explosive in front of said condenser, circuit connections for charging said condenser from said crystal, an air gap of the order of 0.003 inch in said condenser charging circuit, electric connections from said condenser for firing said explosive, and a switch in the explosive firing circuit, said switch being closed on movement of said condenser on a reduction in velocity of said projectile.

7. A projectile having a piezoelectric crystal in the rear portion thereof, a rear wall of said projectile being permeable to heat and pressure from a propelling charge, said piezoelectric crystal surrounding an opening into which such heat and pressure may enter, means for securing said crystal adjacent said rear wall, an electric condenser charged by said crystal, electrical connections between said crystal and condenser, a spotter composition in front of said condenser, means for firing said spotter composition on discharge of said condenser, said means including a switch wherein one contact thereof is closed on reduction in velocity of said projectile, and means in the connections between the crystal and condenser to allow current to flow for charging the condenser and for precluding the condenser being discharged through the crystal in response to a forward movement of the condenser bodily.

References Cited in the file of this patent

UNITED STATES PATENTS

2,676,273	Oestreicher	Apr. 20, 1954
2,764,091	Hudson et al.	Sept. 25, 1956
2,801,589	Meek et al.	Aug. 6, 1957
2,827,851	Ferrara	Mar. 25, 1958
2,856,853	McGinnis	Oct. 21, 1958
2,934,017	Ellett	Apr. 26, 1960
2,970,545	Howe	Feb. 7, 1961
3,035,521	Hynard	May 22, 1962