# United States Patent [19]

**Broïdo**

[11] **3,913,279**

[45] **Oct. 21, 1975**


[54] **GRINDING OR POLISHING DEVICES**


[76] Inventor: **Jacques Jean Georges Gaston Broïdo,** 18 Chemin de Challendin, Geneva, Switzerland



[22] Filed: **Oct. 10, 1973**

[21] Appl. No.: **405,110**

[30] **Foreign Application Priority Data**

Oct. 18, 1972 France ..... 72.36859

[52] **U.S. Cl.** ..... **51/209**

[51] **Int. Cl.**[2] ..... **B24D 7/14**

[58] **Field of Search** ..... 51/209 R, 209 DL, 295



[56] **References Cited**

UNITED STATES PATENTS

| | | | |
|---|---|---|---|
| 3,121,982 | 2/1964 | Miller | 51/209 R |
| 3,464,166 | 9/1969 | Bouvier | 51/209 R |
| 3,622,288 | 11/1971 | Rue | 51/295 |
| 3,745,719 | 7/1973 | Oswald | 51/209 R |
| R27,962 | 4/1974 | Kubsh | 51/209 R |

FOREIGN PATENTS OR APPLICATIONS

| | | | |
|---|---|---|---|
| 26,287 | 11/1907 | United Kingdom | 51/209 DL |
| 501,241 | 7/1930 | Germany | 51/209 R |



*Primary Examiner*—Donald G. Kelly
*Attorney, Agent, or Firm*—Robert E. Burns; Emmanuel J. Lobato; Bruce L. Adams



[57] **ABSTRACT**

The invention relates to grinding or polishing devices adapted for use with an abrasive substance interposed between the grinding tool and the surface to be ground. The invention is characterised in that the grinding tool is constructed partly of hard metal and partly of less hard metal, the two types of metal being so arranged on the grinding tool that the two different metals come into contact with a substantially constant frequency with all zones of the surface being worked.


**14 Claims, 4 Drawing Figures**

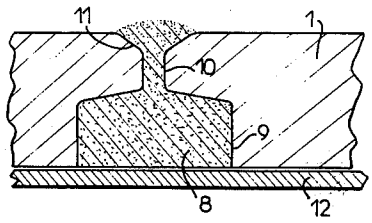


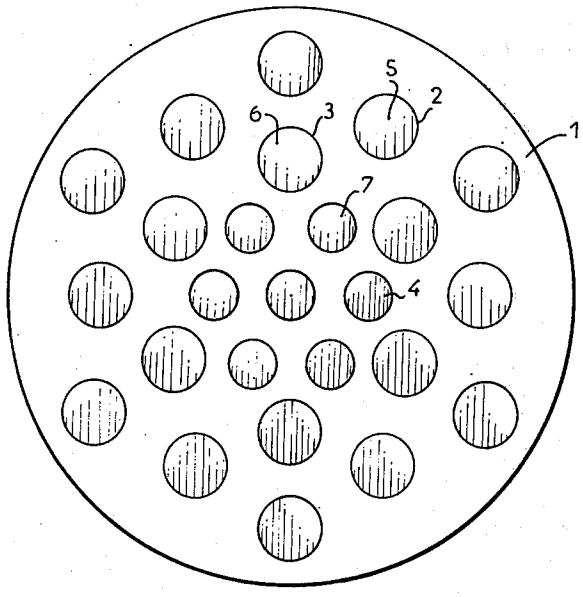

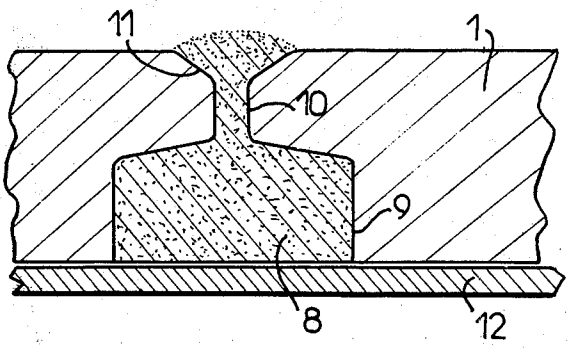


FIG.3

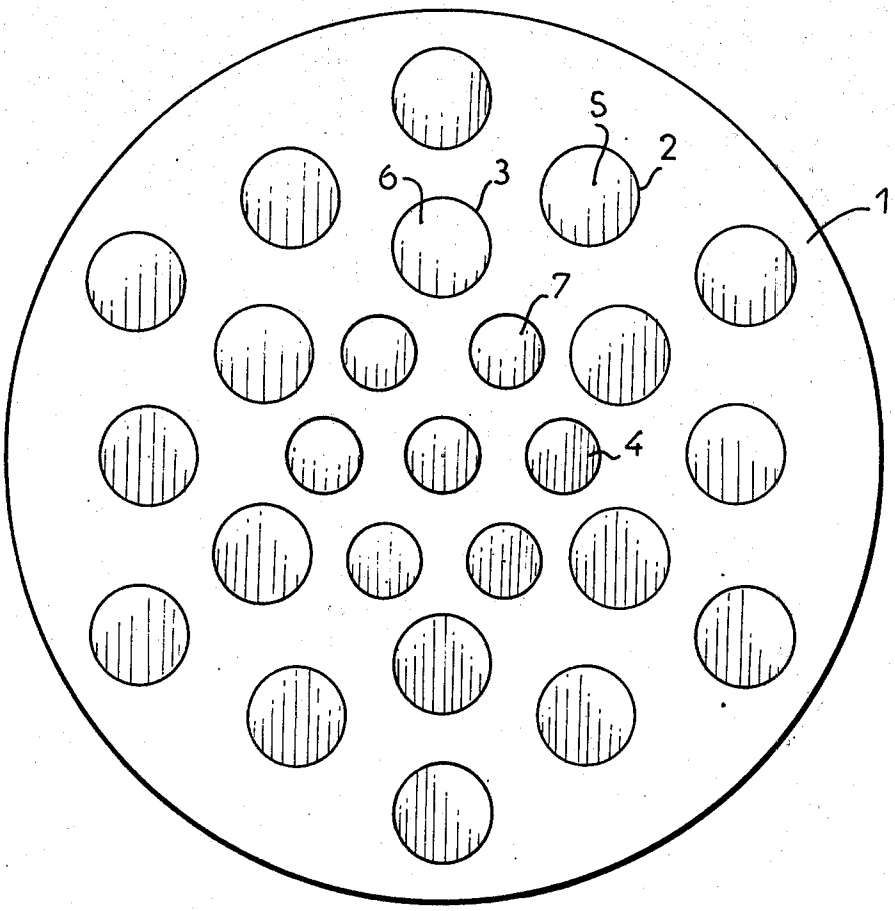


FIG.1

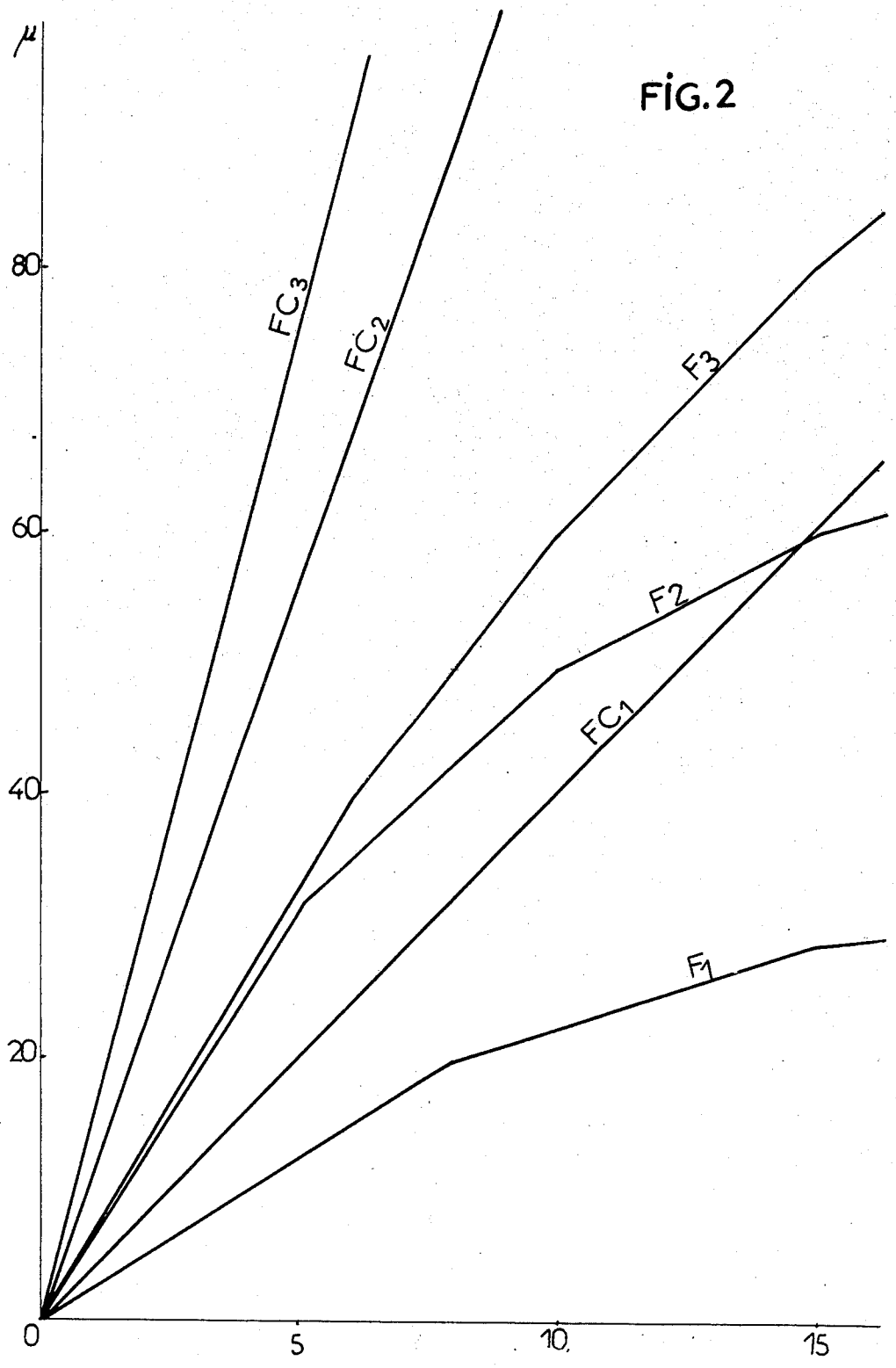


FIG. 2

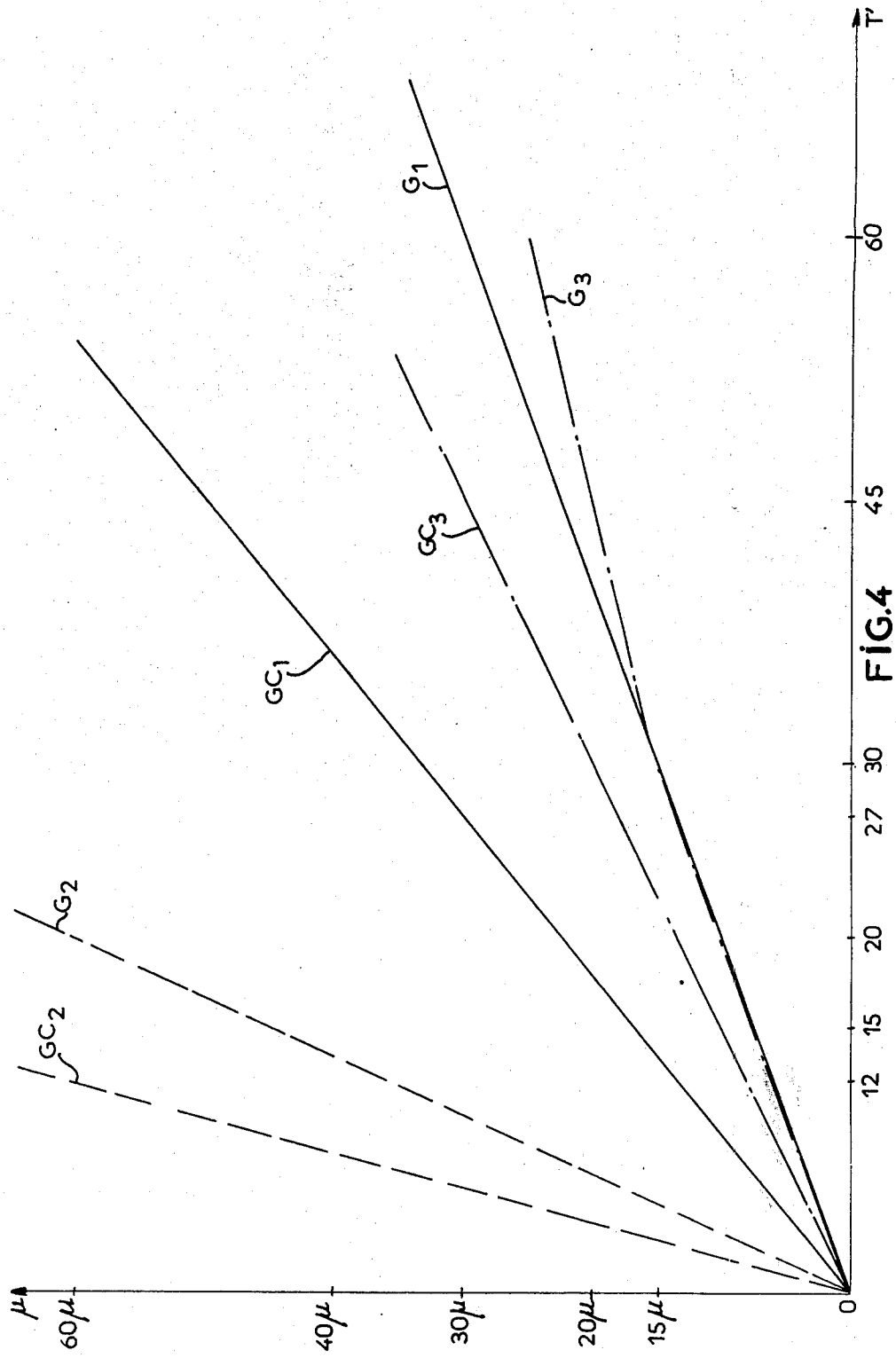


FIG.4

## GRINDING OR POLISHING DEVICES

This invention relates to a grinding or polishing device preferably using solid pastey or liquid abrasive mixtures based on hard abrasive particles or grains, for example; powdered diamond, crystalline cubic boron nitride, although it can likewise be realised with other conventional abrasives, such as any material at least as hard as aluminium oxide, for example, Carborundum or the like.

It is known that the grinding of the components has the object of giving their surface a geometrical perfection, that is to say to impart either a plane surface or a profiled shape which may involve a surface which is partly that of a body of revolution or the surface may be deliberately roughened, wrinkled, corrugated or otherwise profiled.

This result has to be obtained in the minimum time and using the most economical abrasive.

The grinding (and optionally polishing) operation is generally performed, in the case of plane surfaces, by arranging the parts to be ground or polished, under a certain load, to bear against a rotary grinding plate of a grinding machine, and the choice of the material constituting the said grinding plate or support is of prime importance.

This choice is all the more difficult because, on the one hand various, sometimes contradictory, desiderata have to be imposed on the grinding plate or tool, and on the other hand numerous factors play a part in the choice of material which constitutes the plate or tool itself and in the choice of the abrasive mixture, particularly in view of the fact that the hardness of the material to be ground, that of the material forming the grinding element and the hardness of the abrasive particles or grains employed in the mixture influence the result of the operation.

Furthermore, as regards abrasives based on powdered diamond the abrasive, e.g. diamond particles used in abrasive mixtures may have three different modes of action:

1. The diamond particles are implanted in the grinding element (rotary plate) and act after the fashion of a cutting tool.
2. The diamond particles act by rolling between the grinding element and the surface of the part to be ground.
3. The diamond particles act by vibration.

(These last two modes likewise occur in the case of conventional abrasive particles).

In the first case, the diamond particle acts on one or two edges; in the second case (rolling) the work is performed by all the ridges or edges existing on the peripheries of the abrasive grains, for example six or eight for each grain. Lastly, in the third case high frequency vibratory movements can multiply the number of operative edges acting by **10** or by **20.**

Depending on the nature of the grinding or polishing element, the diamond or other abrasive particles act in one or more of these modes.

Generally speaking, it is considered that the material constituting the structural part of the grinding element plate or tool must be softer than that of the part to be ground so that the abrasive particles are retained on the surface of the grinding element rather than on that of the workpiece, failing which the abrasive becomes worn without much good effect. Moreover the said material must be generally rigid and non-deformable in order to ensure as perfect as possible a planeity or other geometrical or profiled shape for the component or workpiece being ground.



Hitherto a whole range of materials have been used to constitute grinding elements, from wood and fabrics mounted on appropriate supports to ultra hard steel and even ceramics. For plane grinding, plates or soft cast iron are generally used, but cast iron is imperfectly suited to the use of some abrasive pastes, particularly a diamond paste, and cast iron plates are generally used with an abrasive based on alumina or Carborundum, which permits good results to be obtained, but over very long periods of time. On the other hand, when used with cast iron, diamond paste whilst ensuring a much faster removal of material from the workpiece does not permit satisfactory states of rugosity to be obtained. Moreover in the case of cast iron the diamond particles act predominatly in the first mode indicated hereinbefore; to a lesser degree in the second mode; and not at all in the third mode. On the other hand, in the case of fabric polishing discs, the diamond particles act solely in the third mode. Hitherto there does not appear to exist a material for grinding tool elements which is universal in its use - i.e. which can be used for grinding polishing or working all possible materials, from soft metals like aluminium to hard steel or ceramic parts, and also parts made of glass for optical instruments; for the latter in particular it has not hitherto been possible to use a hard abrasive such as diamond paste, for polishing.

It has been proposed to provide abrasive grinding tools based on powdered diamond, either by the encrustation of diamond particles on the surface of a plate optionally constituted by a sintered metallic mass, either by incorporation of the powdered diamond (or of a hard fibrous material) in a mass acting as binder, the grinding tools of this type acting in the manner of a wheel and present the disadvantage of relatively rapid wear and possible deformation. It has likewise been proposed to provide grinding tool, the mode of operation of which is similar to those recalled hereinbefore, and which are constituted by a cellular metallic fitting in the form of a honeycomb, the cells of which are filled with a solid, pastey or liquid abrasive material which performs the grinding work, whereas the fitting serves only as a reservoir and distributor for the abrasive.

Grinding tools are likewise known constituted by a disc exhibiting blind holes into which abrasive elements are inserted, the work surface of which project from that of the disc, and alone comes into contact with the surface of the part to be ground.

Progress seems to have been made recently by the use, to constitute the tools plates or other polishing elements suitable for use with a pastey or liquid abrasive, more particularly based on powdered diamond, of a readily mouldable material constituted by a mixture of metallic powder, for example iron, copper, lead or tin powder, and synthetic resin, the two products being intimately mixed, the mixture then being moulded hot or cold. This material, which according to the nature of the metallic powder exhibits a Brinell hardness of between **24** and **30,** appears to retain the diamond paste well and to be capable of being utilised for the grinding or polishing of numerous materials, by virtue of a judicious choice of the metallic powder used in each case.

In another way of putting into effect the above grinding tools it has been proposed to form these of two materials having different properties, the main part of the tool itself being realised as indicated above of an agglomerate of metallic powder and presenting dwells or openings, in which are lodged elements standing flush with or outstand a small distance above the surface of the tool and formed of a similar agglomerate which additionally incorporates powdered diamond, the diamond particles being optionally coated with a metal which may be nickel.

However, the grinding or polishing tool elements realised in this manner undergo a non-uniform wear, necessitating periodic grindings and may in certain cases become deformed by the effect of the increase of temperature or of a heavy load which may be necessary in certain applications. Furthermore, even when a liquid or pastey abrasive mixture based on powdered diamond is used, they do not make it possible to obtain worthwhile speeds of removal of material.

The present invention makes it possible to obtain results greatly superior to those obtained hitherto. It has as one particular object to provide a grinding or polishing tool element with which it is possible to use hard abrasive, in particular diamond paste to treat practically all materials, whilst achieving a higher speed of removal of material and a superior surface state to all the materials at present used, and in the case of a plate, a planeity equivalent to that obtained with cast iron.

The grinding or polishing element according to the invention is characterised by the fact that its work surface is constituted on the one hand by relatively hard metal elements, such as cast iron or steel, and on the other hand by elements of lesser hardness such as iron, copper, lead, tin, graphite or aluminium arranged so that these different elements come into contact with a substantially constant frequency with all the zones of the part treated.

More particularly, remarkable results which will be specified hereinbelow have been obtained with cast iron plates comprising embedded elements of copper, iron, aluminium, graphite, lead, ceramics, especially realised by elements moulded in a mixture, available commercially, of metallic powder with synthetic resin, the work surface being ground so that the elements of softer materials are flush with the surface of the cast iron.

It has been found that unexpectedly plates constituted of soft cast iron having embedded or incorporated therein elements moulded from a mixture of copper powder and synthetic resin have given from all points of view results very substantially superior to those obtained with plates constituted by the one or the other of these materials. This appears to be due to the fact that the particles of the hard abrasive based mixture used with the plate according to the invention work in all three possible modes of action simultaneously, since the alternation at high frequency, of the order of **100** cycles per second, of the surface elements of different nature causes the said particles to be set in vibration.

Thus with a cast iron plate comprising embedded elements moulded with a mixture of copper powder and resin and occupying substantially one third of the surface of the plate, the following results were obtained, in comparison with cast iron alone and with the agglomerate of copper powder and resinoid materials alone;

**1.** Speed of removal of the material on the ground part

assuming that the quantity of material removed in **10** minutes with a cast iron plate is equal to **100** - the quantity of material removed with a plate of copper powder agglomerated with the resin is equal to **160** - the quantity of material removed with the plate according to the invention is equal to **200.**

**2.** Rugosity (rough, wrinkled or corrugated surfaces)

Starting with an initial rugosity of **50** mic. inch CLA of the ground part, after **10** minutes grinding there is obtained: with cast iron, a state of rugosity of **42** mic. inch CLA, with the agglomerate of copper a rugosity of **14** mic. inch CLA, with the plate according to the invention **5** mic. inch CLA.

On the other hand, with a cast iron plate, if diamond particles of a given granulometry are used, at the end of a certain time a rugosity is obtained which can only be improved by changing the grain size of the abrasive particles. With the plate according to the invention, on the contrary, in the same time and without changing the granulometry of the abrasive, a rugosity more than twice as low is obtained.

**3.** Planeity:

After a grinding time of **10** minutes, the planeity measured in monochromatic light through a quartz crystal is equal to: with a cast iron plate—**1½** fringes; with a copper agglomerate—**½** fringe; with the plate according to the invention less than **½** fringe.

This is to say that the defects are practically non-measurable.

By way of example, there is described hereinbelow and illustrated in the accompanying drawing an embodiment of a grinding plate according to the invention.

FIG. **1** is a view in plan of a grinding plate according to the invention

FIG. **2** is a comparative graph illustrating the quantity of material removed as a function of the time, with a cast iron plate on the one hand and with a plate according to the invention on the other hand, using an abrasive based on powdered diamond.

FIG. **3** is a vertical section of an element inserted into the plate and shown at a certain stage of the fabricating procedure.

FIG. **4** is a comparative graph illustrating the speed of removal of material with a cast-iron plate and with a plate according to the invention, using a conventional abrasive.

The plate **1** according to the invention illustrated in FIG. **1,** is realised in cast iron, for example of the "Meeanite" type. In the said plate there are made concentric circular rows of circular holes **2, 3, 4 . . . ,** in which there are embedded and optionally glued cylindrical elements **5, 6, 7 . . .** previously moulded and optionally machined, constituted by a homogeneous mixture of metallic powder and of resin, the nature of the metallic powder (copper, iron, aluminium, tin, lead, etc.) being chosen according to the nature of the material of the parts to be ground.

Obviously the circular form of the apertures made in the cast iron plate for the embedding of the pieces of softer material is given only by way of example and said

apertures may have any profile adapted to that of the embedded parts; they may be constituted by through bores or by blind holes or cavities filled by the added pieces of soften metal. The said pieces may also be constituted by a pure metal, sintered with or without binder, or machined in the mass, subject however to their being softer than the metal constituting the plate itself. After inserting the pieces of softer material, the surface of the plate is carefully ground so that the surface of the added elements is flush with the surface of the cast iron.

In the embodiment illustrated in FIG. **3**, the elements **8** of metallic powder agglomerated with a binder of synthetic resin are cast directly into the apertures of the plate **1**. To ensure the anchorage of the said cast elements **8** in the apertures of the plate, the latter exhibit in their lower part **9** a preferably cylindrical shape separated by a constriction **10** from their funnel-shaped upper part **11**, in which the mass formed by the mixture of powder metallic and resin is cast so as to completely fill the aperture **9, 10, 11**, the plate **1** being placed upon a table **12**. After the casting and solidification of the elements **9**, the surface of the plate is ground so that the surface of the said elements is precisely flush with that of the plate.

As the linear speed of the plate measured along the concentric rows of the elements **5, 6, 7** decreases from the peripheric towards the centre of the plate, the ratio of the surfaces of the added elements to the surface of the cast iron is on the contrary increased by retaining the same number of the said elements in the successive rows, the overall ratio of the surface of the cast iron to the surface of the added elements being of the order of 3; for example in the case of the elements moulded in copper powder and resin, the work surface of the plate is distributed at the rate of **70%** for the cast iron and **30%** for the copper.

FIG. **2** illustrates curves of removal of materials as a function of the time using a cast iron plate on the one hand and the plate according to the invention which has just been described on the other hand, the curves **F1, F2,** and **F3** illustrate the removal as a function of the time of hard steel, of stainless steel and of mild steel with a cast iron plate, whereas the curves **FC1, FC2** and **FC3** illustrate the speed of removal of the same metals with a cast iron/copper plate according to the invention. It will be seen from the curves, on the one hand that the speeds of removal with the plate according to the invention are very much higher, and on the other hand that the said speeds are constant in a customary interval of time, whereas with the cast iron plate the speed of removal of the material decreases rapidly with the time.

This gain in speed of removal of material obtained with the grinding plate according to the invention is particularly noticeable when an abrasive based on powdered diamond of small granulometry is used: for example, with a **6** micron diamond powder a speed of removal of material is obtained almost equal to that using a **14** microns diamond powder with known plates, so that for equal speed, the invention permits a much better surface state (lower rugosity) to be obtained.

The comparative surface states have also been indicated hereinbefore.

To summarise, the device according to the invention makes it possible to perform grinding and polishing with an abrasive based on laid abrasives, such as powdered diamond or even crystalline cubic boron nitride under economic conditions, principally by reason of the saving of time achieved, and with greatly superior surface states to those obtained by the devices previously known with which the use of powdered diamond was practically limited to polishing.

Furthermore the device according to the invention makes it possible, where classic abrasive mixtures (based on aluminium or Carborundum) are used, to increase surprisingly the speed of removal of material from the parts ground, as is shown by the tests reported hereinbelow, carried out all under the same conditions with a LAPMASTER machine fitted with a **24**-inch plate and illustrated in FIG. **4** of the drawing, in which the curves $G_1$, $G_2$, $G_3$ show the removal of material as a function of the time with a cast-iron plate, and the curves $GC_1$, $GC_2$, $GC_3$ the corresponding values with the use of a plate according to the invention.

The comparative numerical results of the said tests are as follows:

1. Curves $G_1$ – $GC_1$

Grinding of stainless steel washers with the abrasive known by the name LAPMASTER **2900**, using plates of the same diameter, the same number of parts and the same load per washer:

| | |
|---|---|
| a) Grooved cast-iron plate: | |
| Grinding time | 60 minutes |
| Material removed | 30 microns |
| Speed of removal of material | 0.5 micron/minute |
| b) Grooved plate according to the invention: | |
| Grinding time | 27 minutes |
| Material removed | 30 microns |
| Speed of removal of material | 1.1 microns/minute |

This gives an economy of time of 55% and a substantially equal economy of abrasive and of oil.

2. Curves $G_2$ – $GC_2$

Grinding of cast-iron rings with the abrasive known as LAPMASTER FK **800**

| | |
|---|---|
| a) Grooved cast-iron plate: | |
| Grinding time | 20 minutes |
| Material removed | 60 microns |
| Speed of removal of material | 3 microns/minute |
| b) Grooved plate according to the invention: | |
| Grinding time | 12 minutes |
| Material removed | 60 microns |
| Speed of removal of material | 5 microns/minute |

Giving an economy of time of 40% and an economy of the same proportion of abrasive and of oil.

3. Curves $G_3$ – $GC_3$

Grinding of treated steel parts of hardness 63 Rockwell with the abrasive LAPMASTER FK 800:

| | |
|---|---|
| a) Grooved cast-iron plate: | |
| Grinding time | 45 minutes |
| Material removed | 20 microns |
| Speed of removal of material | 0.5 micron/minute |
| b) Grooved plate according to the invention: | |
| Grinding time | 30 minutes |
| Material removed | 20 microns |
| Speed of removal of material | 0.9 microns/minute |

Giving an economy of time, abrasive and oil of 33%.

I claim:

**1.** A movable abrading device, comprising:

pluralities of first and second abrading means for cooperating in abrading a workpiece surface by effecting rapid movements of abrasive particles, carried by a fluid composition injected between said abrading means and said workpiece surface, to abrade said workpiece surface;

said first abrading means consisting of a solid material which contains at least particles of a hard metal of the group comprising cast iron and steel;

said second abrading means consisting of a solid material which contains at least particles of a metal softer than said hard metal;

said first and second abrading means having surface portions exposed to said fluid composition and all of which are flush with one another, for cooperatively defining a regular abrading surface coextensive with said first and second abrading means, being contiguous with one another in said abrading surface, and being regularly distributed over the same;

whereby the rapid movements of the abrasive particles to abrade the workpiece surface are effected in regular cycles during which abrasive particles are implanted in said soft metal in a first part of each cycle, are rolled by said hard metal in a second part of each cycle, and are vibrated between said hard and soft metals in a third part of each cycle, thus enabling rapid and regularly distributed abrasion of the workpiece surface.

**2.** A device according to claim **1** in which said regular abrading surface cooperatively defined by said surface portions of the first and second abrading means is a plane surface.

**3.** A device according to claim **1** including means for effecting said movements of abrasive particles, by said first and second abrading means, in generally rotary directions; the first grinding means jointly defining a rotary disc and the second grinding means being individual bodies inserted in said disc.

**4.** A device according to claim **1** in which said softer metal is copper.

**5.** A device according to claim **1** in which said softer metal is tin.

**6.** A device according to claim **1** in which said softer metal is aluminum.

**7.** A device according to claim **1** in which said softer metal is an iron, softer than cast iron and steel.

**8.** A device according to claim **1** in which the hard metal of the first abrading means and the softer metal of the second abrading means are metallic powders agglomerated with a synthetic binding agent.

**9.** A device according to claim **1** in which the hard metal of the first abrading means is a body of cast iron, defining an abrading disc with apertures, the second abrading means comprising individual bodies in the respective apertures.

**10.** A device according to claim **9** in which said disc is rotary and said apertures thereof are disposed and distributed in circular rows concentric with said disc.

**11.** A device according to claim **10** in which said apertures, in successive ones of said concentric rows, are peripherally staggered with respect to one another.

**12.** A device according to claim **1** in which said first abrading means occupy **70** per cent of said abrading surface.

**13.** A device according to claim **12** in which said second abrading means occupy progressively greater portions of said abrading surface, in a progression from an outer edge to a central part of said surface.

**14.** A device according to claim **9** wherein each of said apertures has a cylindrical portion on one side of said disc, a funnel portion on the other side of said disc, adjacent said workpiece surface, and a constricted portion between said cylindrical and funnel portions; the material of said second abrading means constituting bodies cast in the respective apertures.

* * * * *