(12) INTERNATIONAL APPLICATION PUBLISHED UNDER THE PATENT COOPERATION TREATY (PCT)

(19) World Intellectual Property Organization
International Bureau

(43) International Publication Date
17 April 2025 (17.04.2025)

WIPO | PCT

(10) International Publication Number
WO 2025/080240 A1

(51) International Patent Classification:
H02J 3/00 (2006.01) *H02K 19/36* (2006.01)
H02K 11/042 (2016.01) *H02P 9/00* (2006.01)

(21) International Application Number:
PCT/UA2024/000043

(22) International Filing Date:
12 August 2024 (12.08.2024)

(25) Filing Language: English

(26) Publication Language: English

(30) Priority Data:
a 2023 04758 09 October 2023 (09.10.2023) UA

(72) Inventor; and

(71) Applicant: **STEPURA, Denys Fedorovych** [UA/UA]; vul. Mykilsko-Botanichna, build. 17/17-A, apt. 6, Kyiv, 01033 (UA).

(74) Agent: **KHELEMSKYI, Yevhen**; 10 Holosiivska str., ap. 96, 03039, Kyiv (UA).

(81) Designated States *(unless otherwise indicated, for every kind of national protection available)*: AE, AG, AL, AM, AO, AT, AU, AZ, BA, BB, BG, BH, BN, BR, BW, BY, BZ, CA, CH, CL, CN, CO, CR, CU, CV, CZ, DE, DJ, DK, DM, DO, DZ, EC, EE, EG, ES, FI, GB, GD, GE, GH, GM, GT, HN, HR, HU, ID, IL, IN, IQ, IR, IS, IT, JM, JO, JP, KE, KG, KH, KN, KP, KR, KW, KZ, LA, LC, LK, LR, LS, LU, LY, MA, MD, MG, MK, MN, MU, MW, MX, MY, MZ, NA, NG, NI, NO, NZ, OM, PA, PE, PG, PH, PL, PT, QA, RO, RS, RU, RW, SA, SC, SD, SE, SG, SK, SL, ST, SV, SY, TH, TJ, TM, TN, TR, TT, TZ, UA, UG, US, UZ, VC, VN, WS, ZA, ZM, ZW.

(84) Designated States *(unless otherwise indicated, for every kind of regional protection available)*: ARIPO (BW, CV, GH, GM, KE, LR, LS, MW, MZ, NA, RW, SC, SD, SL, ST, SZ, TZ, UG, ZM, ZW), Eurasian (AM, AZ, BY, KG, KZ, RU, TJ, TM), European (AL, AT, BE, BG, CH, CY, CZ, DE, DK, EE, ES, FI, FR, GB, GR, HR, HU, IE, IS, IT, LT, LU, LV, MC, ME, MK, MT, NL, NO, PL, PT, RO, RS, SE, SI, SK, SM, TR), OAPI (BF, BJ, CF, CG, CI, CM, GA, GN, GQ, GW, KM, ML, MR, NE, SN, TD, TG).

(54) **Title:** ROTATING RECTIFIER UNIT BLOCK

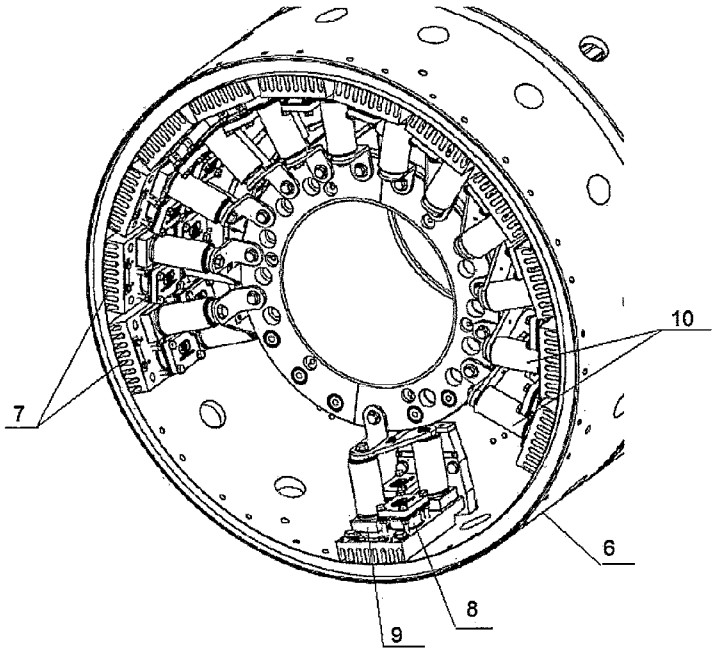

Fig. 3

(57) **Abstract:** The invention relates to a field of energy sector, in particular, to a rotating block in the BVD-4000-3000 UZ exciter system, which can be used in energy facilities such as nuclear power plants. A rectifier block consists of two rings (6) with eighteen sections installed. Each section comprises a radiator (7), two diode blocks (8), two insulation blocks (9) and two fuses (10). The diode blocks (8) and fuses (10) are made of ceramic and aluminum.

WO 2025/080240 A1

[Continued on next page]

Declarations under Rule 4.17:
— *of inventorship (Rule 4.17(iv))*

Published:
— *with international search report (Art. 21(3))*

ROTATING RECTIFIER UNIT BLOCK

The invention pertains to the energy sector, specifically to the design of a rotating rectifier unit block within an exciter system of the BVD-4000-3000UZ (БВД-4000-3000 У3) type. These systems are utilized in energy facilities, particularly at nuclear power plants.

TECHNICAL BACKGROUND

The BVD-4000-3000UZ exciter is a complex device comprising two synchronous AC generators of the VGT-2100-150 (ВГТ-2100-150) type, containing rotating rectifiers of direct and reverse polarity. Each of these synchronous generators includes two ventilation rings with a rotating rectifier block.

The purpose of the rotating rectifier block is to convert the AC from the VGT-2100-150 generator into DC and transmit it to the rotor winding of the TVV-1000-2UZ (ТВВ-1000-2У3) and TVV-1200-2UZ (ТВВ-1200-2У3) turbo generators. The rotating rectifier unit (block) is assembled according to a three-phase bridge circuit (see Fig. 1).

A known rotating rectifier block features a modular design consisting of two ventilated rings mounted on the generator's armature, isolated from the shaft and each other, containing thirty-six sections each. Each section comprises a radiator to which two direct polarity diode blocks (cathode blocks) and two reverse polarity diode blocks (anode blocks) are attached, along with fuses. Each diode block is covered with a protective plate. The fuses are mounted on plastic blocks and interconnected with copper jumpers. A current conductor, with one end screwed into blind threaded holes in the ventilated rings and the other end connected to the semi-coupling area, ensures the supply of DC (via the rectifier's direct and reverse polarity diode blocks) to the rotor of the TVV-1000-2UZ and TVV-1200-2UZ turbo generators. The rectifier diode block converts the AC from the VGT-2100-150 synchronous generator into DC and transmits it to the turbo generator's rotor winding.

This known design, however, has significant drawbacks. The diode blocks and fuses are made of steel, resulting in each section of the rotating rectifier block weighing 9,4 kg. Given the operational rotational speed of 3000 rpm, there is a substantial risk of destroying the entire BVD-

4000-3000 UZ exciter system due to the centrifugal force exerted on the ventilated ring, which reaches 40,7 tons.

Thus, there is a technical problem in providing a rotating rectifier block design that is simpler and lighter, reducing the centrifugal force from each section and consequently increasing the overall safety of the BVD-4000-3000 UZ exciter system.

SUMMARY OF THE INVENTION

This technical problem is addressed by a rotating rectifier block comprising two ventilated rings 6, mounted on the generator's armature, isolated from the shaft and each other, containing sections. Each section includes:

- A radiator 7, mounted inside the ventilated ring 6 with two screws;
- Two direct and reverse polarity diode blocks 8 mounted on the radiator 7, each covered with a protective plate 12 and insulation 17;
- Two blocks 9, mounted on the radiator 7;
- Two fuses 10 mounted on the plastic (insulation) blocks 9 and interconnected with a copper jumper 11 using screws 14;

distinguished by the fact that each of the specified ventilated rings contains eighteen sections; moreover, the direct and reverse polarity diode blocks 8 and fuses 10 are made of ceramic and aluminum.

The technical result of the device according to the invention is the simplification of the rotating rectifier block design by reducing the number of sections installed on one ventilated ring. Consequently, due to this and the use of materials with lower density for the diode blocks and fuses, the mass of each section of the device is significantly reduced, which in turn greatly decreases the centrifugal force exerted by it and enhances the overall safety of the BVD-4000-3000 UZ exciter system.

DETAILED DESCRIPTION THE INVENTION

As mentioned above, the invention relates to a rotating rectifier block consisting of two ventilated rings 6 mounted on the armature of a synchronous generator, isolated from the shaft and from each other, inside which sections are installed, each containing:

- A radiator 7, mounted inside the ventilated ring 6 with two screws;
- Two direct and reverse polarity diode blocks 8 mounted on the radiator 7, each covered with a protective plate 12 and insulation 17;
- Two blocks 9, mounted on the radiator 7;
- Two fuses 10 mounted on the plastic (insulation) blocks 9 and interconnected with a copper jumper 11 using screws 14,

distinguished by the fact that each of the specified ventilated rings contains eighteen sections; moreover, the direct and reverse polarity diode blocks 8 and fuses 10 are made of ceramic and aluminum.

Short description figures

The following figures the structure of the rotating leveler block is disclosed in more detail, by an invention

Figure 1 illustrates general scheme leveling current by help block equalizer, which rotates, where:

1 – diode bloc direct polarity (cathod block);

2 – reverse polarity diode block (anode block);

3 - block rectifier;

4 – bloc filter

Figure 2a illustrates electric scheme diode block direct polarity (cathodeblock).

Figure 2b illustrates electric scheme diode inverted block polarity (anodicblock).

Figure 3 illustrates construction rectifier block, what rotates according to the invention from the inside, where:

6 – ventilation ring;

7 – radiators;

8 – diod blocks;

9 – insulation

blocks;10 - fuses

Figure 4 illustrates separate section block equalizer, what rotates in axonometry, where:

7 – radiator;

10 fuses;

11 – copper jumper;

12 – protective plate;

13 screw.

Figure 5a illustrates the front view of a separate section of the rotating rectifier block.

Figure 5b illustrates the view of a separate section of the rotating rectifier block in a cross-section along line A – A, where

7 – radiators;

8 – diode blocks;

9 – insulation blocks;

10 – fuses;

12 – protective plate;

14 – screw;

15 screw;

16 copper contact;

17 insulating cover.

As previously mentioned, the BVD-4000-3000UZ exciter is a complex device consisting of two synchronous AC generators of the VGT-2100-150 type, which contain rotating rectifiers of the NE-X23M-4580-UXL4 type with direct and reverse polarity. The main nominal data of the exciter and its components (two synchronous generators) are provided in Table 1.

Table 1

Parameters	**norms by types**	
	Exciter BVD-4000-3000UZ	**synchronous generatorsVHT-2100-150-1 VHT-2100-150-2**
Power Permanent Short term 15s	 4000 kW 16000 kW	 2100 / 2150 kW 8400 / 8600 kW
High-voltage Permanent Short term 15s	 530 V 1060 V	 415 V 830 V
Curren Permanent Short term 15s	 7640 A 15280 A	 2990 A 5980 A
Frequency	-	150 Hz
Cos fi	-	0.98
Rotation speed	3000 rpm	3000 rpm

Rectification, i.e., the conversion of alternating current to direct current in the rotating rectifier block according to the invention, occurs in the same manner as in the prototype—using a three-phase bridge circuit (see Figure 1) with diodes, which are electronic devices with two electrodes that allow current to flow in only one direction. A current conductor is placed along the axis of the generator shaft, with one end screwed into blind threaded holes in the ventilation rings and the other end connected to the semi-coupling area, ensuring the supply of direct current (due to the direct and reverse polarity diode blocks of the rectifier) to the rotor of the TVV-1000-2UZ and TVV-1200-2UZ turbo generators. The direct polarity diode blocks are located on one ventilation ring, while the reverse polarity diode blocks are on the other. Their schematics are illustrated in Figure 2. The rectifier diode blocks according to the invention operate alternately, each for one-third of the period. The load current equals the sum of the currents of each diode and always flows in the same direction—from the synchronous generator to the turbo generator rotor winding.

Figure 3 shows the internal construction of the rectifier block according to the invention, and Figures 4 and 5 depict a separate section of it. Compared to the modular construction of the prototype, each ventilation ring 6 in the rectifier block according to the invention contains 18 sections. This design solution, combined with the fact that the diode blocks 8 and fuses 10 in each section are mounted on the radiator 7 in a crosswise manner (see Figure 4), allows for a significant reduction in the number of fastening parts. The radiators 7 serve to dissipate heat from the diode blocks. The fuses 10 provide protection against electrical overload.

Diode Parameters:

- Nominal current: 630 A;
- Nominal reverse voltage: 2000-2800 V.

Fuse Parameters:

- Nominal current: 500 A;
- Nominal voltage: 1000 V.

The materials chosen for the fuses 10 and diode blocks 8 in the rectifier block according to the invention are low-density materials, specifically ceramic and aluminum. More specifically, the diode blocks 8 are made of aluminum, and the fuses 10 are made of ceramic and aluminum.

The density of materials for the fuses and diode blocks in the prototype and the rectifier block according to the invention is shown in Table 2 (sources: Happy House and UM).

Table 2

Material	Density, kg/m ^{3}
Steel, including stainless steel	7850-7860
Aluminum	2600
Ceramic materials (depending from class)	700-1500

As mentioned above, the density of the materials for the diode blocks 8 and fuses 10 in the rectifier block according to the invention is at least 3-11 times lower than that of steel. Due to this, as well as the installation of fewer sections in each ventilation ring 6 in the rectifier block according to the invention, it has been possible to achieve a significant reduction in the overall mass compared to the prototype. This also leads to a proportional reduction in the centrifugal force acting on the outer surface of the ventilation ring 6, which consequently results in a substantial reduction in the risk of exciter failure due to the decreased load on the ventilated ring from the centrifugal force at a rotational speed of 3000 rpm.

Centrifugal force is typically calculated using the following formula (1):

$$F = m*V^2/r, \qquad (1)$$

where:

F is the centrifugal force;

m is the mass of the moving object;

V is the velocity of the moving object;

r is the distance from the object to the center of rotation.

Therefore, with a section weight of 9.4 kg in the rectifier block at a rotational speed of 3000 rpm and a ventilated ring radius of 440 mm, the centrifugal force acting on it from one section will be 40.7 tons. In contrast, the weight of one section of the rectifier block according to the invention is 5.7 kg, and thus at a rotational speed of 3000 rpm and a ventilated ring radius of 440 mm, the force acting on it from one section will be 24.7 tons. Consequently, this leads to a significant reduction in the risk of failure of the entire BVD-4000-3000UZ exciter system and greatly increases the safety of its operation. This is critically important for energy facilities, particularly nuclear power plants.

Therefore, the application of the rectifier block according to the invention achieves the desired technical result, namely: reducing the mass of each section by more than 1.5 times (from 9.4 kg to 5.7 kg), thereby also reducing the centrifugal force by more than 1.5 times and enhancing the overall safety of the BVD-4000-3000 UZ exciter system.

INVENTION FORMULA

1. As mentioned above, the invention relates to a rotating rectifier block consisting of two ventilated rings 6 mounted on the armature of a synchronous generator, isolated from the shaft and from each other, inside which sections are installed, each containing:

- A radiator, mounted inside the ventilated ring with two screws;
  - Two direct and reverse polarity diode blocks mounted on the radiator each covered with a protective plate and insulation;
  - Two blocks mounted on the radiator;
  - Two fuses mounted on the plastic (insulation) blocks and interconnected with a

copper jumper using screws;

distinguished by the fact that each of the specified ventilated rings contains eighteen sections; moreover, the direct and reverse polarity diode blocks and fuses are made of ceramic and aluminum.

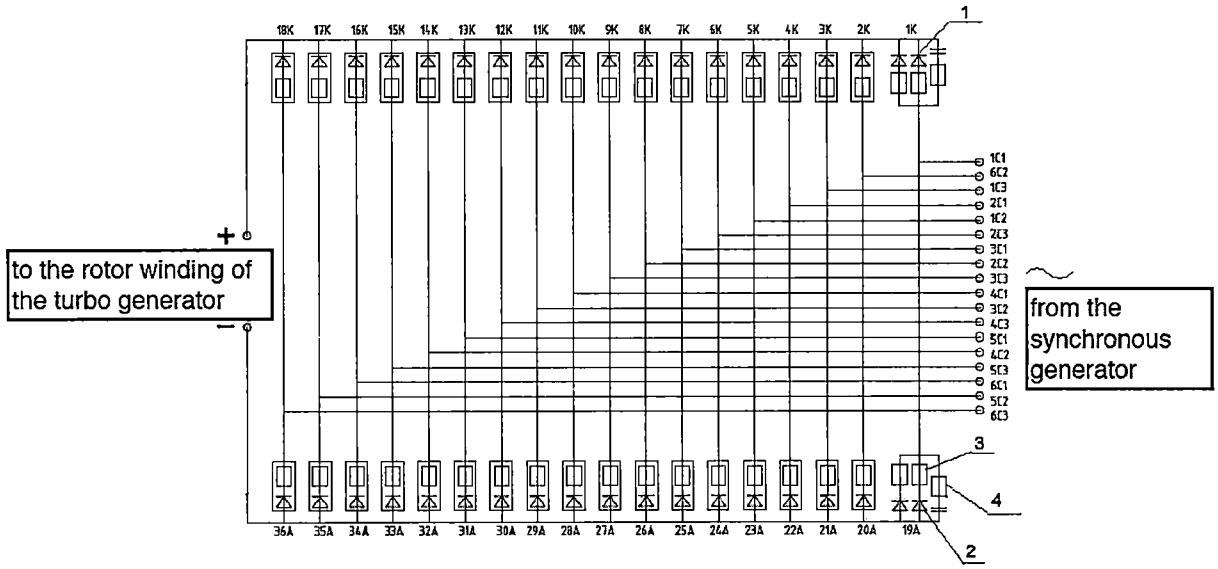

Fig. 1

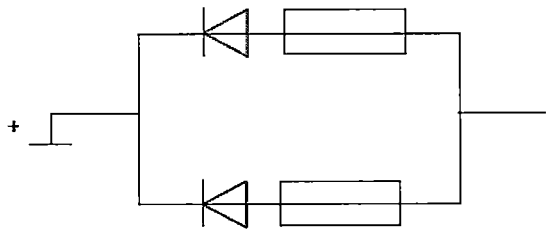

Fig. 2a

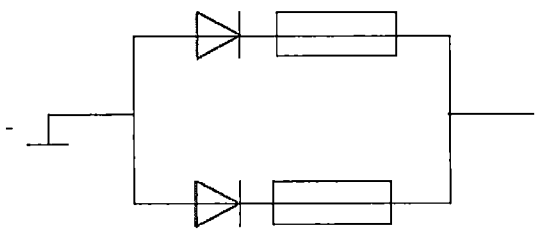

Fig. 2b

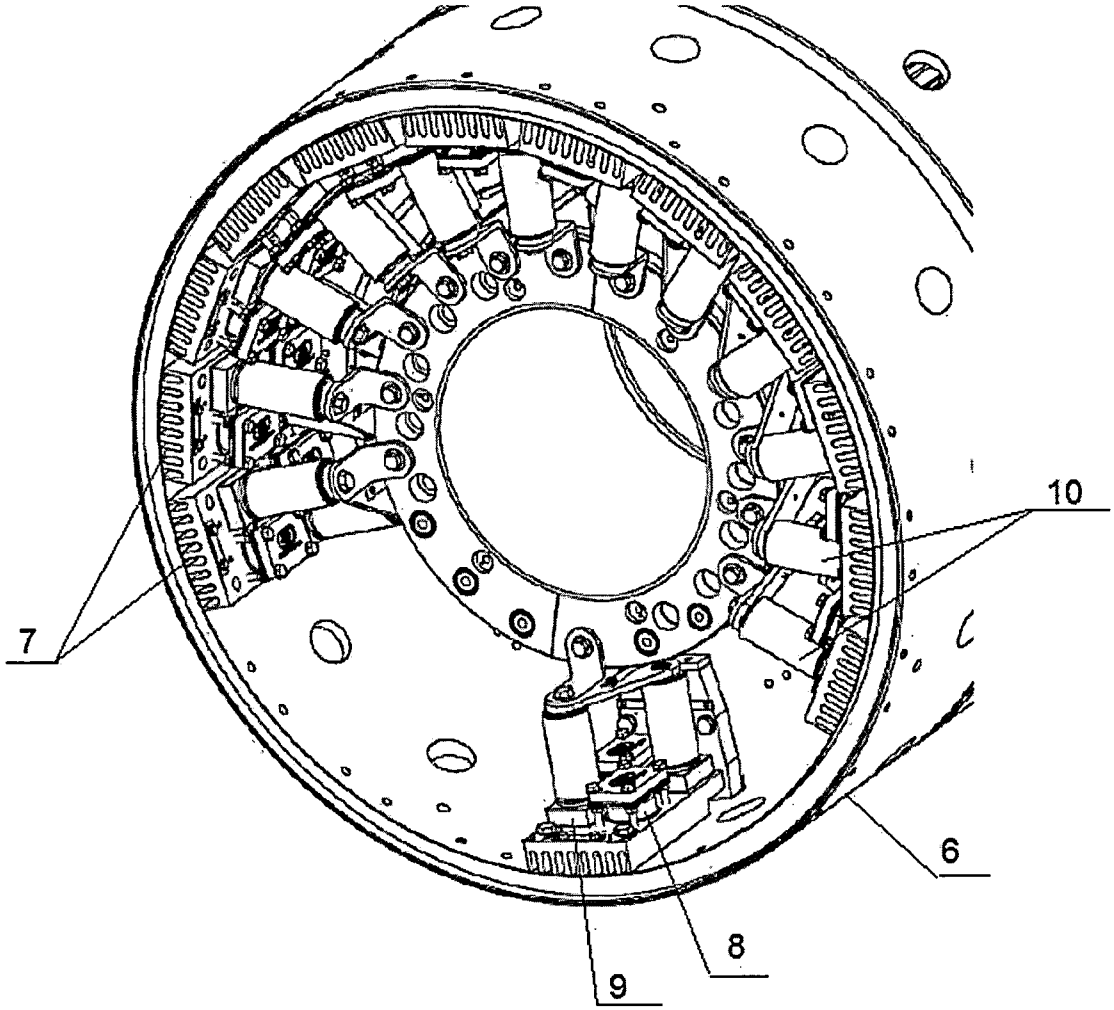

Fig. 3

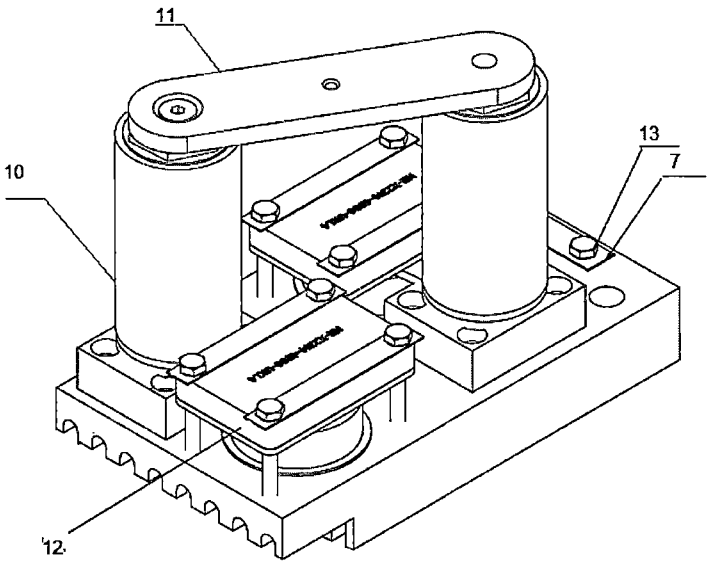

Fig. 4

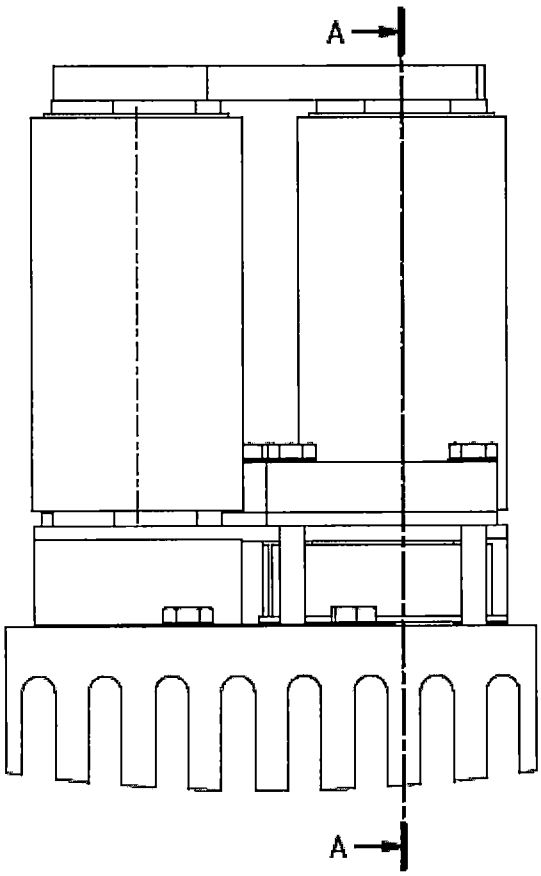

Fig. 5a

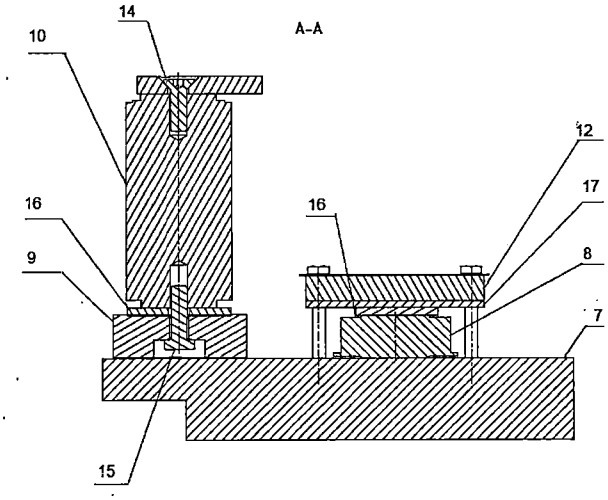

Фіг. 5b

INTERNATIONAL SEARCH REPORT

International application No.
PCT/UA2024/000043

A. CLASSIFICATION OF SUBJECT MATTER

H02J 3/00, H02K 11/042, H02K 19/36, H02P 9/00

According to International Patent Classification (IPC) or to both national classification and IPC

B. FIELDS SEARCHED

Minimum documentation searched (classification system followed by classification symbols)

IPC: F01D 13/00, F01D 15/10, H02J 3/00, H02P 9/00, H02K 11/042, H02K 7/18, H02K 19/16, H02K 19/36, H02M 1/10, H02M 7/00

Documentation searched other than minimum documentation to the extent that such documents are included in the fields searched

Electronic database consulted during the international search (name of database and, where practicable, search terms used)

Espacenet, Google Patents

C. DOCUMENTS CONSIDERED TO BE RELEVANT

Category *	Citation of document, with indication, where appropriate, of the relevant passages	Relevant to claim No.
X	US 3371235 A (WESTINGHOUSE ELECTRIC CORP [US]) 27 February 1968 (1968-02-27) (title, claim 4, figs. 1, 3, 4, 6)	1
A	CN 103401357 A (DEC DONGFENG ELECTRIC MACH CO [CN]) 20 November 2013 (2013-11-20) (the whole document)	1
A	US 4814699 A (SIEMENS AG [DE]) 21 March 1989 (1989-03-21) (the whole document)	1
A	CN 203933421 U (BEIJING MRSICO CONTROL TECHNOLOGY CO LTD [CN]) 05 November 2014 (2014-11-05) (the whole document)	1
A	US 3829725 A (WESTINGHOUSE ELECTRIC CORP [US]) 13 August 1974 (1974-08-13) (the whole document)	1
A	EP 0395597 A2 (ANSALDO ABB COMPONENTI S R L [IT]) 31 October 1990 (1990-10-31) (the whole document)	1

☒ Further documents are listed in the continuation of Box C.

☒ See patent family annex.

* Special categories of cited documents:

"A" document defining the general state of the art which is not considered to be of particular relevance

"D" document cited by the applicant in the international application

"E" earlier application or patent but published on or after the international filing date

"L" document which may throw doubts on priority claim(s) or which is cited to establish the publication date of another citation or other special reason (as specified)

"O" document referring to an oral disclosure, use, exhibition or other means

"P" document published prior to the international filing date but later than the priority date claimed

"T" later document published after the international filing date or priority date and not in conflict with the application but cited to understand the principle or theory underlying the invention

"X" document of particular relevance; the claimed invention cannot be considered novel or cannot be considered to involve an inventive step when the document is taken alone

"Y" document of particular relevance; the claimed invention cannot be considered to involve an inventive step when the document is combined with one or more other such documents, such combination being obvious to a person skilled in the art

"&" document member of the same patent family

Date of the actual completion of the international search	Date of mailing of the international search report
15 November 2024 (15.11.2024)	**20 November 2024 (20.11.2024)**
Name and mailing address of the ISA/UA THE STATE ORGANIZATION "UKRAINIAN NATIONAL OFFICE FOR INTELLECTUAL PROPERTY AND INNOVATIONS" Dmytra Hodzenka Str., 1, Kyiv, 01601, Ukraine Facsimile No. +380 (44) 494-05-35	Authorized officer **A. VEREMENKO** Telephone No. +380 (44) 494-05-72

INTERNATIONAL SEARCH REPORT

International application No.
PCT/UA2024/000043

C (Continuation). DOCUMENTS CONSIDERED TO BE RELEVANT

Category*	Citation of document, with indication, where appropriate, of the relevant passages	Relevant to claim No.
A	CN 115149737 A (ANHUI EXCITER GENERATOR TECH CO LTD [CN]) 04 October 2022 (2022-10-04) (the whole document)	1

INTERNATIONAL SEARCH REPORT
Information on patent family members

International application No.
PCT/UA2024/000043

Patent document, cited in the search report	Publication date	Patent family member(s)	Publication date
US 3371235 A	1968-02-27	BE 680964 A	1966-10-17
		CH 458518 A	1968-06-30
		DE 1538255 A1	1970-03-26
		FR 1479776 A	1967-05-05
		GB 1122972 A	1968-08-07
		JP S4920882 B1	1974-05-28
CN 103401357 A	2013-11-20	CN 103401357 B	2016-08-10
US 4814699 A	1989-03-21	CA 1256494 A	1989-06-27
		DE 3543927 A1	1987-06-19
		EP 0228613 A1	1987-07-15
		EP 0228613 B1	1990-08-01
		IN 166464 B	1990-05-19
		JP H0558512 B2	1993-08-26
		JP S62145176 A	1987-06-29
CN 203933421 U	2014-11-05	None	
US 3829725 A	1974-08-13	AU 6488074 A	1975-07-31
		BE 811230 A	1974-08-19
		CA 1002096 A	1976-12-21
		CH 577245 A5	1976-06-30
		DE 2407533 A1	1974-08-22
		ES 423070 A1	1976-05-01
		FR 2218679 A1	1974-09-13
		FR 2218679 B1	1980-08-14
		GB 1454027 A	1976-10-27
		IT 1006251 B	1976-09-30
		JP S49114011 A	1974-10-31
		JP S55988 B2	1980-01-11
		SE 393906 B	1977-05-23
EP 0395597 A2	1990-10-31	DE 69004479 T2	1994-05-05
		EP 0395597 A3	1990-12-19
		EP 0395597 B1	1993-11-10
		IT 1233513 B	1992-04-03
CN 115149737 A	2022-10-04	None	