United States Patent

Robinson

[15] **3,703,037**

[45] **Nov. 21, 1972**

[54] **ULTRASONIC DENTAL HAND-PIECE WITH DETACHABLE TREATMENT TOOLS**

[72] Inventor: **Seymour Robinson,** 1561 N.E. 179th Street, Miami, Fla. 33160

[22] Filed: **June 25, 1970**

[21] Appl. No.: **49,642**

[52] **U.S. Cl.**.....**32/58,** 32/DIG. 4

[51] **Int. Cl.**.....**A61c 3/06**

[58] **Field of Search**.....32/58, 50, DIG. 4; 310/26

[56] **References Cited**

UNITED STATES PATENTS

3,488,851	1/1970	Haydu	32/58
3,368,280	2/1968	Freidman	32/58

FOREIGN PATENTS OR APPLICATIONS

1,148,858	12/1957	France	32/58

Primary Examiner—Robert Peshock
Attorney—Lloyd J. Andres

[57] **ABSTRACT**

A dental hand-piece including an electronic ultrasonic transducer energized by a cable connecting an electronic ultrasonic generator including a coupling device for energizing interchangeable treatment tools retained in the hand-piece. Each of the tools and coupling device having a bore therein for conducting pressurized water from said hand-piece for supplying water to the area of the tooth contacted by the tip portion of the tool and including a pair of typical tools for tooth treatment.

5 Claims, 9 Drawing Figures

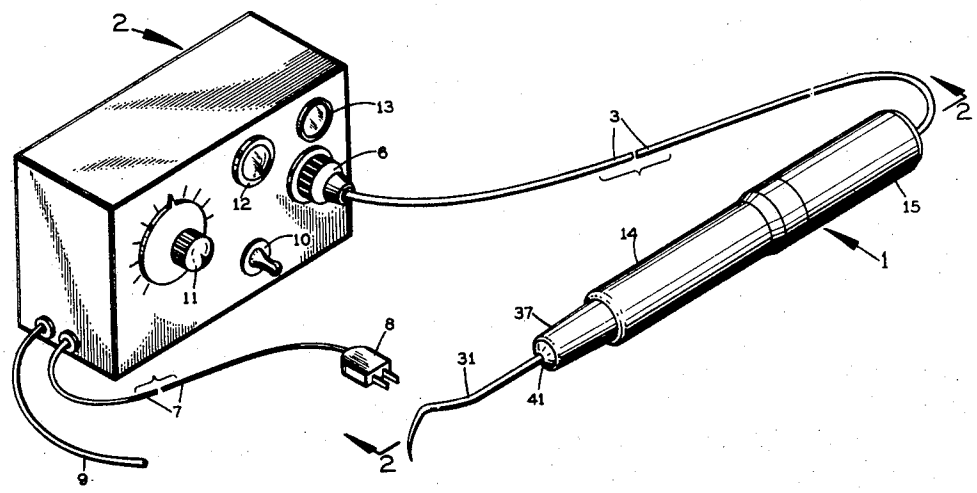

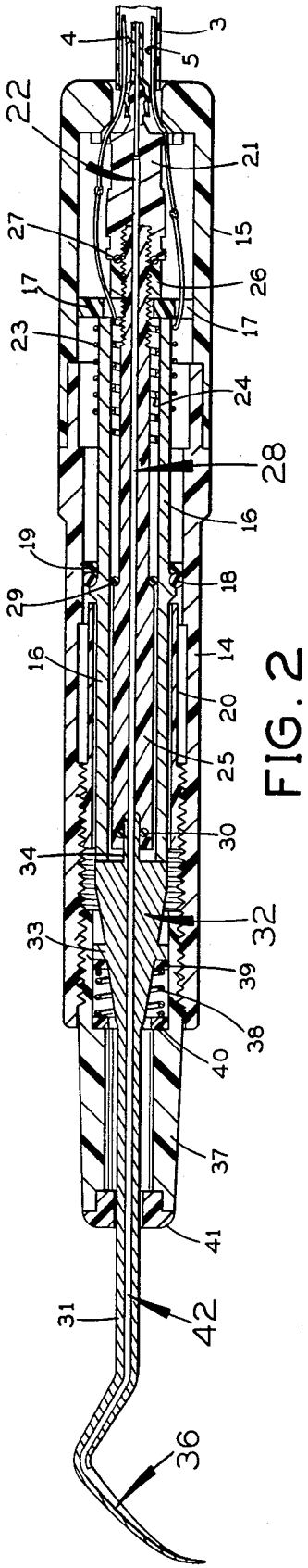

FIG. 2

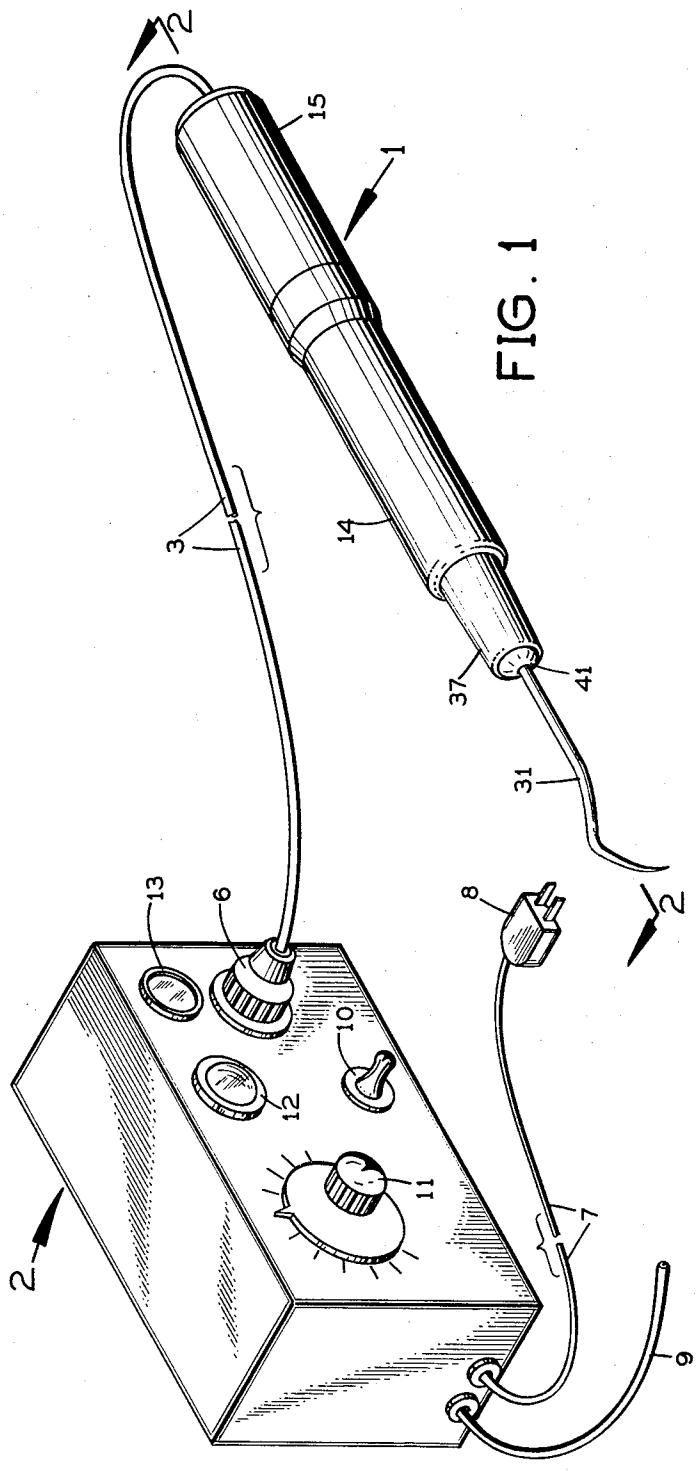

FIG. 1

INVENTOR.
SEYMOUR ROBINSON
BY
Lloyd & Anderson

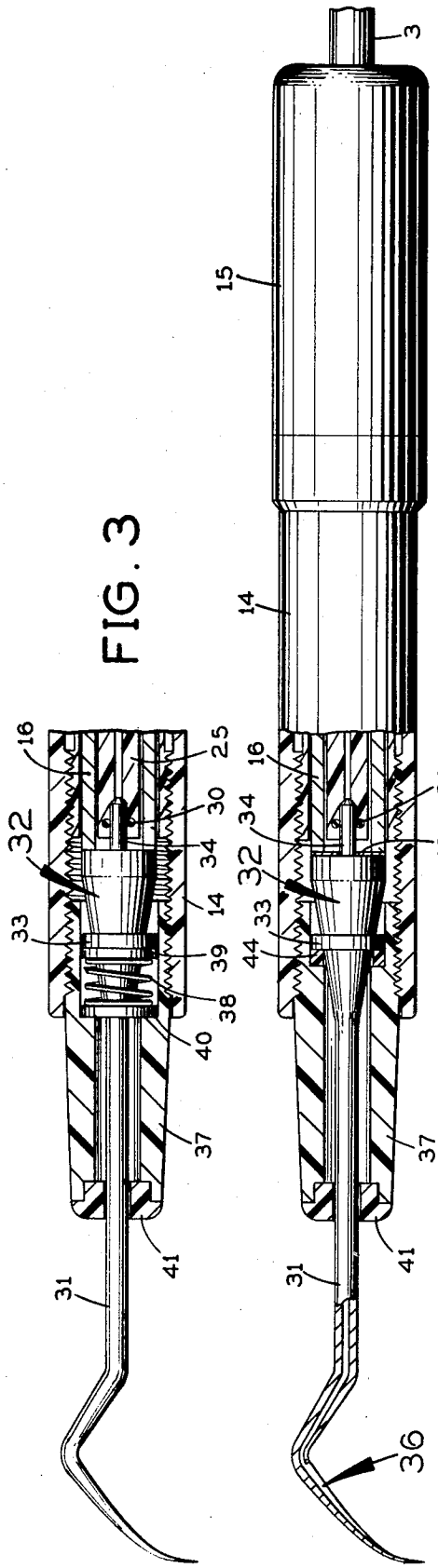

FIG. 3

FIG. 5

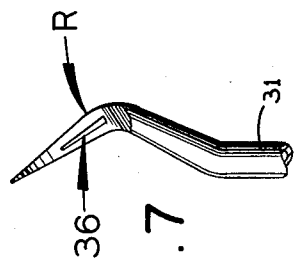

FIG. 7

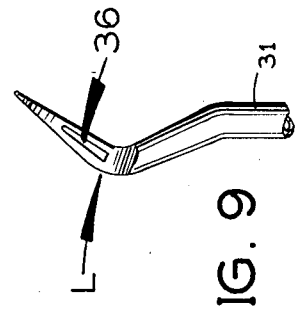

FIG. 9

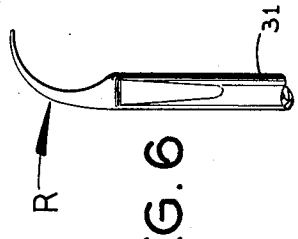

FIG. 6

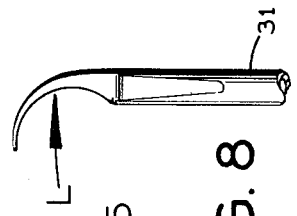

FIG. 8

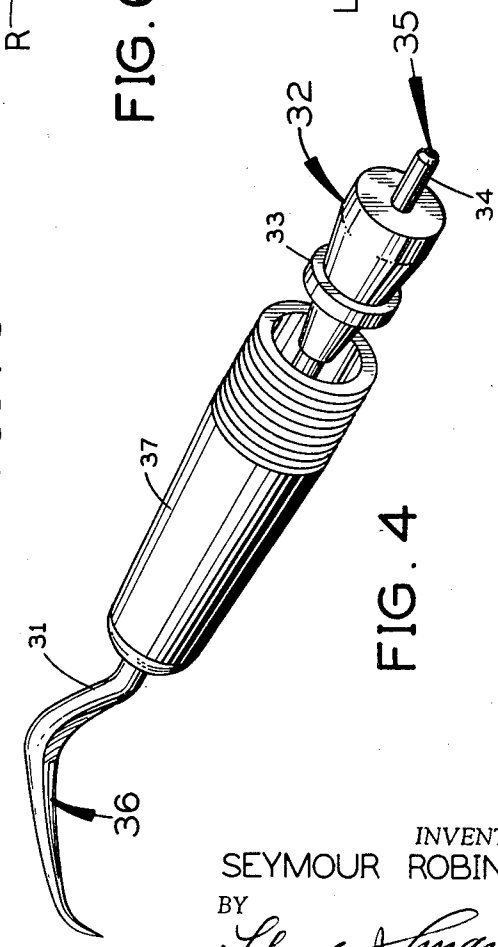

FIG. 4

INVENTOR.
SEYMOUR ROBINSON
BY
Lloyd J. Innes.

ULTRASONIC DENTAL HAND-PIECE WITH DETACHABLE TREATMENT TOOLS

This invention relates in general to dental treatment apparatus and more particularly to an ultrasonic hand-piece provided for interchangeable treatment tools having a variety of tips for tooth cleaning and treatment. Each of said tools having a bore therethrough for conducting pressurized water supplied by the hand-piece to the tool and directed thereby to the area of treatment of each tooth.

Prior dental cleaning and treatment tools for hand operation required a high degree of skill and care when used by the dentist or hygienist. Furthermore, prior ultrasonic devices do not provide for interchangeable tools having different tips for the many purposes required and were not detachably coupled to a hand-piece without excessive loss of ultrasonic energy.

These prior tools had no built-in means for supplying flushing water directly to the treatment areas.

The present invention overcomes the above objections and disadvantages by the provision of a hand-piece in which a detachable coupling means is provided in the hand-piece for engaging interchangeable tools having different treatment tips without serious energy loss of ultrasonic energy from the transducer, including the provision of a water passage through the tool for providing treatment in the presence of a water supply directed at the area treated.

Reference is had to applicant's pending patent application, entitled Ultrasonic Tooth Cleaning Apparatus, Ser. No. 7,607.

These and other objects and advantages in one embodiment of the invention are described and shown in the following specification and drawings, in which:

FIG. 1 is a perspective illustration of an ultrasonic hand-piece and energizing unit therefor.

FIG. 2 is an enlarged cross sectional side elevation taken through section line 2—2, FIG. 1.

FIG. 3 shows a coupling for detachably securing a tool in the hand-piece shown in FIG. 1.

FIG. 4 is a perspective view of the coupling and tool disengaged from the hand-piece shown in FIG. 3.

FIG. 5 is an alternate form of coupling for detachably securing a tool in the hand-piece.

FIG. 6 is a fragmentary top view of a right hand treatment tool of the character shown in FIG. 3.

FIG. 7 is a fragmentary bottom plan view of the tool shown in FIG. 6.

FIG. 8 is a fragmentary side view of a left hand treatment tool of the character shown in FIG. 3.

FIG. 9 is a fragmentary bottom plan view of the tool shown in FIG. 8.

Referring to FIG. 1, an ultrasonic hand-piece assembly 1 is connected to an electronic ultrasonic generator assembly 2 by a flexible tube 3 which is adapted to conduct water and includes a pair of electric ultrasonic output conductors 4 and 5, which tube and conductors are removably secured to the unit assembly 2 by a dual coupling 6.

The ultrasonic generator includes a power cord 7 with a plug 8 for attachment to a source of electric energy and a tub 9 adapted to be connected to a source of controlled pressurized water. The generator also includes an on-off switch 10, an ultrasonic intensity control 11, an on-off signal light 12 and water flow indicator 13.

Referring to FIG. 2, the hand-piece consists of a plastic molded body member 14 and a plastic heel piece 15, secured together by well known means, which serves as an inlet junction for the conductors 4 and 5 and the tubing 3. A tubular ceramic ultrasonic transducer 16 has the rear end thereof positioned against a flange 17 in the heel piece 15 and is axially centralized in the body member 14 by an "O" ring 18 resting against a ring 19 positioned around the inner periphery of the body member. The opposite outer end portion of the transducer 16 is spaced from the bore in body member 14 by an elastomer tube 20.

The tubular transducer 16 consists of one of the well known synthetic ceramics, such as barium titanate, and the bore and the outside surface are independently coated with metal, thus providing a capacitive reactance load.

The water supply tubing 3 is connected to a nipple 21 in the heel piece which has a bore 22 therethrough for conducting pressurized water to the coupling of the tool. The electrical conductors 3 and 4 are secured to an external contact spring 23 and an internal spring 24, respectively, as shown, for energizing the transducer. The inner end of the nipple 21 is threaded to a plastic tube 25 and sealed thereto with a spacer 26 and an "O" ring 27. The tube 27 has a bore 28 therethrough connecting the bore 22. An additional "O" ring 29 aligns the tube 25 and a smaller "O" ring 30 is secured in the outer end of the tube 25 to seal a portion of the coupling, to be hereinafter described.

Referring to FIG. 4, one of a particular form of tool 31 is provided with a cylindrical coupling member 32 which includes an integral coaxial flange 33 and stem 34. A coupling member includes a coaxial bore 35 which extends through the entire shank of the tool and exits into a channel 36 in the tip portion of the tool. A generally cylindrical guard 37 has external threads at one end thereof for engaging internal like threads in the body for retaining the tool by means of the coupling thereon.

Again referring to FIGS. 2 and 3, the circular planar face of the coupling member 32 is urged against the outer end of the transducer 16 by a coil spring 38 bearing against flange 33 with alignment washers 39 and 40 on each side thereof with the outer washer bearing against a shoulder 41 in the bore of the guard 37. An elastomer grommet 41 is retained in the end of the guard 37, which provides sealed but free reciprocation of the shank of the tool 31 through the guard 37. It is now apparent that when the coupling is positioned against the end of the transducer, as shown in FIG. 3, and the guard 37 threaded into the body member 14, the tension of the coupling against the transducer may be varied corresponding to the desired ultrasonic amplitude of reciprocation of the tool when the hand-piece is operated.

It is also apparent from FIGS. 2 and 5 that the pressurized water supplied by tubing 3 will flow through nipple 21, plastic tube 25 and through stem 34 and into the bore 42 of the tool, which water will be guided by channel 36 directly to the work area of the point of the tool.

Referring to FIG. 3, it is of great importance that the outer end of the transducer 16 and the mating face of the coupling member 32 be precisely flat and in overall

contact to prevent erratic operation of the device or possible fracture of the ceramic transducer and to this end the following alternate construction is shown in FIG. 5, which shows the same coupling member 32 having a soft metal washer 43 positioned between the end of the transducer 16 and the face of the coupling member, and a further alternate by replacing the spring 38 with a resilient plastic washer 44, such as Teflon or nylon. Thus, if the metal washer 43 is made from zinc, copper, or other soft metal of uniform thickness, the precise machining of the end of the transducer and the face of the coupling member is avoided. Furthermore, the replacement of the spring 38 by a resilient plastic washer 44 eliminates the need for the more tedious adjustment of the spring urged coupling.

FIGS. 6 and 7 illustrate a desirable tip R for the tool 31 having a generally V shape angled to the right for treatment of the lower right and upper left teeth of a patient.

FIGS. 8 and 9 illustrate the same style tip L as shown in FIGS. 6 and 7 except angled to treat the left lower and right upper teeth of a patient.

In operation, one of several tools, such as the one shown in the figures, is secured in the hand-piece by threading the guard 37 therein and energizing the ultrasonic generator by connection to a source of power and a source of pressurized water and then by moving the switch 10 to the "on" position, the tool and the tip thereof will reciprocate at an ultrasonic frequency under the control of knob 11 and a desired amount of water will flow by the adjustment of a well known valve means, not shown.

It is to be understood that certain modifications in construction are intended to come within the scope and teachings of the above specification.

Having described my invention, I claim:

1. An ultrasonic dental hand-piece comprising a means forming an elongated dielectric handle having a bore therethrough with the outer portion of said bore having a predetermined thread therein,

a tubular ultrasonic transducer having inner and outer electrodes coaxially positioned in said bore and against a support means fixed in the rear end portion of said handle having a coaxial hole therethrough with the outer end thereof adapted for connection to a flexible water conducting hose,

a pair of electric terminals connected to said electrodes of said transducer,

a pair of flexible electric conductors positioned through the rear portion of said handle connected to said terminals,

a dental tool with the rear end thereof terminating in a coaxial coupling means having a coaxial flange spaced from a coaxial transverse end surface normal the axis of said coupling means with a water conducting bore through said coupling means and said tool terminating in an orifice in the outer end portion of said tool,

said tool positioned in the outer end of said hand-piece with said end surface of said coupling means positioned directly against the planar front end of said transducer,

a detachable tubular guard member loosely retained on said tool and having threads for mating engagement with the said threads in the outer end of said bore with said guard member projecting outward therefrom,

an elastomer washer of predetermined resilience positioned between the front surface of said flange and the rear surface of said guard member when the latter is threaded into the said outer end of said bore for urging and holding said coupling means against the front end of said transducer with predetermined pressure whereby said tool will be longitudinally oscillated by said transducer at an ultrasonic frequency when said conductors are energized by electric ultrasonic energy of predetermined magnitude and frequency and whereby pressurized water connected to said hose will flow through said support means and said transducer and said tool and be projected from said orifice.

2. The construction recited in claim 1 whereby a washer of relatively soft metal material is positioned between the outer surface of said flange and the end surface of said transducer for compressive conformation over small surface irregularities and for providing a water sealed area of contact between said coupling and said transducer when the latter is energized without an appreciable loss of energy transmitted to said tool.

3. The construction recited in claim 1 wherein the said elastomer washer is replaced by a metal coiled compression spring of predetermined resilience for guiding and urging said coupling against said transducer when said guard is threaded a predetermined axial distance into said bore of said handle.

4. The construction recited in claim 1 wherein said tool has a tapered arcuate end portion which communicates with said water conducting bore.

5. The construction recited in claim 1 wherein said tool has an elongated shank which is retained by said detachable tubular guard member, whereby said tool can be quickly replaced when said guard member is unthreaded from said bore.

* * * * *