(No Model.) 2 Sheets—Sheet 1.

J. M. FUGETT.

ROAD CART.

No. 393,971. Patented Dec. 4, 1888.

FIG-1-

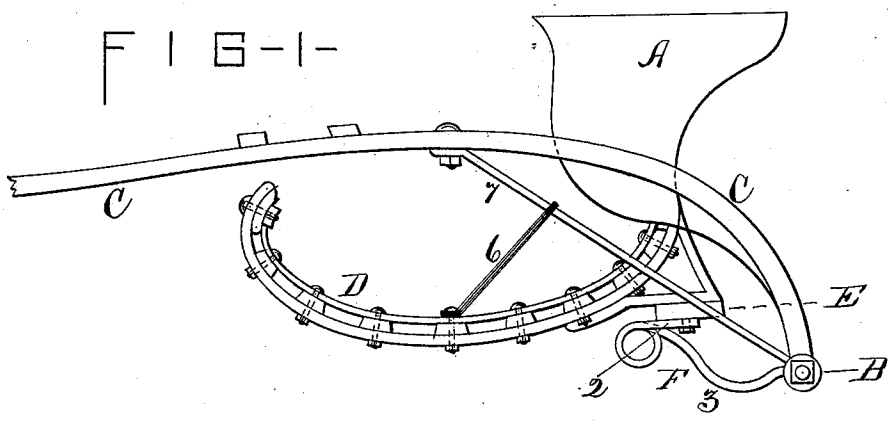

FIG-2-

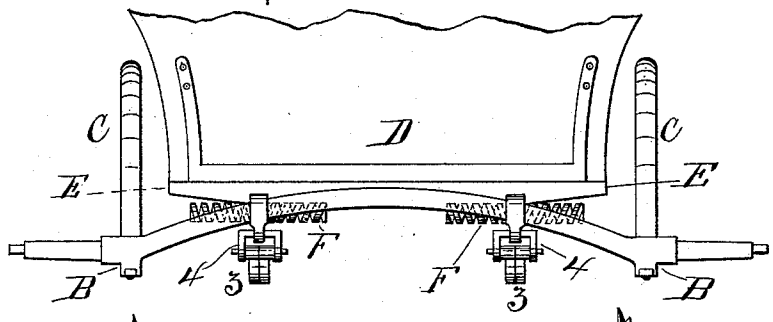

FIG-3-

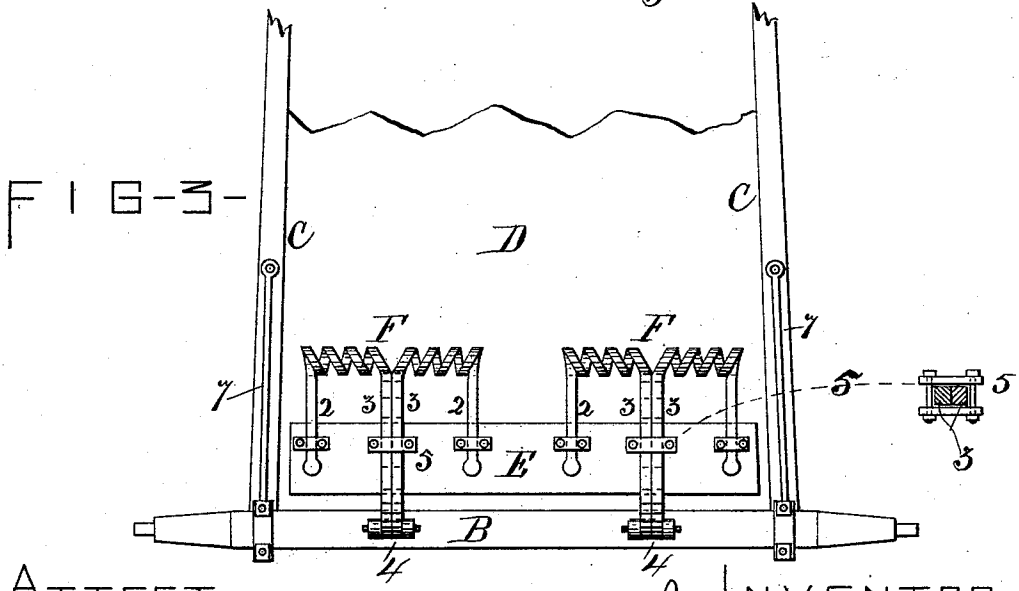

ATTEST-
Wm. C. Raymond.
J. J. Hildreth.

INVENTOR-
Joseph M. Fugett
per Dewitt & Dewitt his Attys

N. PETERS. Photo-Lithographer. Washington, D. C.

(No Model.) 2 Sheets—Sheet 2.

J. M. FUGETT.

ROAD CART.

No. 393,971. Patented Dec. 4, 1888.

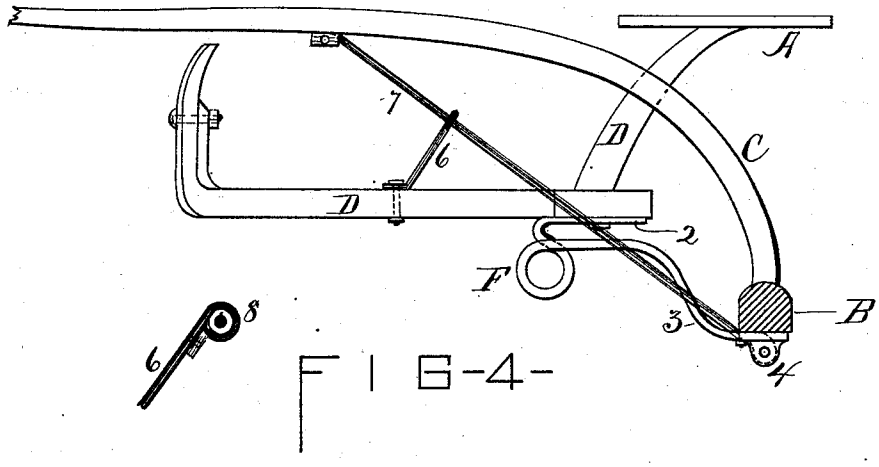

FIG-4-

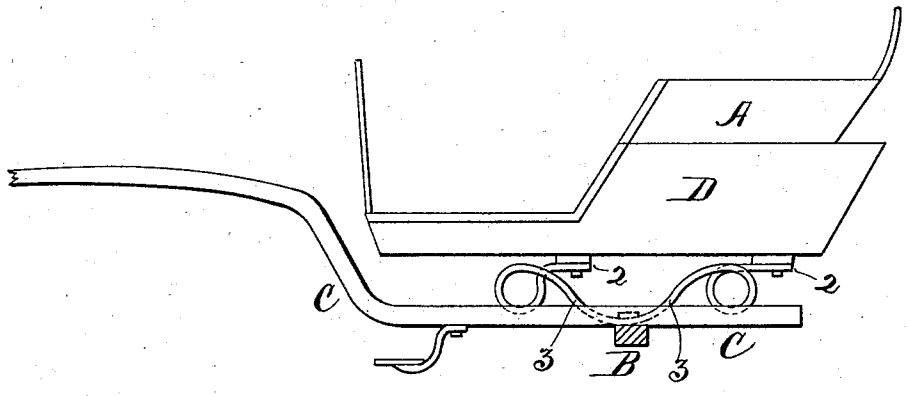

FIG-5-

ATTEST-

Wm. C. Raymond.

J. T. Hildreth.

INVENTOR-

Joseph M. Fugett.

per Smith & Dennison

his Attorneys.

N. PETERS. Photo-Lithographer, Washington, D. C.

UNITED STATES PATENT OFFICE.

JOSEPH M. FUGETT, OF BALDWINSVILLE, NEW YORK.

ROAD-CART.

SPECIFICATION forming part of Letters Patent No. 393,971, dated December 4, 1888.

Application filed March 31, 1888. Serial No. 269,095. (No model.)

To all whom it may concern:

Be it known that I, JOSEPH M. FUGETT, of Baldwinsville, county of Onondaga, in the State of New York, a citizen of the United States, have invented certain new and useful Improvements in Road-Carts, of which the following is a specification, reference being had to the accompanying drawings, in which—

Figure 1 is a side elevation of a cart with a slat-work body. Fig. 2 is a rear elevation of the same. Fig. 3 is a bottom plan view thereof. Fig. 4 is a side elevation showing another style of body. Fig. 5 is a side elevation of a cart having a square body mounted upon double springs, the thills being of a different style than those shown in the other figures.

My invention relates to vehicles for the transportation of people, and especially to that class commonly known as "road-carts," and which are provided with devices for taking up the horse motion, so that the seat or body of the vehicle is not jolted thereby.

My object is to produce a road-cart free from horse motion, and my devices for its removal are of simple construction.

My invention consists in the several novel features of construction and operation which are hereinafter described, and which are specifically set forth in the claim hereunto annexed.

It is constructed as follows:

A is the seat.

D is the body, shown in Fig. 1 as constructed of slat-work, and in Figs. 2 and 4 of a box form.

B is the axle.

C C are the thills, clipped at their rear ends upon the axle in any ordinary manner.

E is the spring-bar across the rear part of the body, and secured thereto or mounted thereon.

F F are double helical springs, usually wound from square or round metal, and in which 2 2 are the body-arms secured to the spring-bar, and 3 3 are the axle-arms extending from the wind of the spring downward to the axle, to which they are secured and connected by the clip and shackle joint 4; and to insure their joint and united action the arms 3 are usually secured together by the clip 5, intermediate between the winds of the spring and the shackle-joint 4.

When I use the curved thills shown in Figs. 1, 2, 3, and 4, I use a brace, 7, between the thill adjacent to the cross-bar and the axle; and 6 is a rod connecting the body to the brace and provided with an eye, 8, at its upper end, through which the brace passes, fitting loosely therein. In this manner the body is supported upon the springs and brace-rod, the brace-rod connection being a flexible joint and a spring-joint, deriving its spring-action from the brace, and by the joint action of the springs and this flexible connection the vibration of the thills incident to the horse motion is all taken up before it reaches the body.

In Fig. 5 I show a square box-body mounted upon a double set of springs, F, one set being in front of the axle and the other at the rear and connected to two spring-bars across the body, the thills being straight beneath the body and rising upward in front thereof. In this construction the forward helical springs operate as a substitute for the brace and rod connection shown in the other figure, and give the same flexibility of motion, and operate as a take-up for horse motion in substantially the same manner.

What I claim, and desire to secure by Letters Patent, is—

The combination, with the thills, axle, and brace 7, connecting the thills and axle, of the body supported rearwardly upon a spring connected to the axle and to the body, and further supported by the rod 6, connected at one end to the body and fitting loosely over the brace, substantially as described.

In witness whereof I have hereunto set my hand this 30th day of January, 1888.

JOSEPH M. FUGETT.

In presence of—

H. P. DENISON,

C. W. SMITH.