United States Patent [19]

Rodstein

[11] **Des. 254,758**

[45] ** **Apr. 22, 1980**

[54] **CARPENTER'S APRON**

[75] Inventor: **Harvey R. Rodstein,** Los Angeles, Calif.

[73] Assignee: **Action Leathercraft, Inc.,** Commerce, Calif.

[**] Term: **14 Years**

[21] Appl. No.: **925,413**

[22] Filed: **Jul. 17, 1978**

[51] **Int. Cl.** ..... **D02—99**

[52] **U.S. Cl.** **D2/400;** D2/229

[58] **Field of Search** D2/400, 225, 226, 227, D2/228, 229; 2/46, 48, 51, 52; 224/191, 195, 216, 224, 225, 226, 227, 904

[56] **References Cited**

U.S. PATENT DOCUMENTS

D. 249,297	9/1978	Hillinger	D2/229
2,785,409	3/1957	Lackey	2/51

OTHER PUBLICATIONS

Goldblatt Trowel Trades Tools, 1976, p. 72, item #09 129 H7, and item #09 822 H8.

Mathias Klein & Sons Tools, 1963, p. 47, Cat. No. 5116.

Primary Examiner—Joel Stearman

Assistant Examiner—Carmen H. Vales

Attorney, Agent, or Firm—Paul D. Supnik

[57] **CLAIM**

The ornamental design for a carpenter's apron, substantially as shown and described.

DESCRIPTION

FIG. **1** is a perspective view taken from the rear, top and left side of a carpenter's apron showing my new design;

FIG. **2** is a top plan view thereof;

FIG. **3** is a front elevational view thereof;

FIG. **4** is a right side elevational view thereof;

FIG. **5** is a rear elevational view thereof; and

FIG. **6** is a left side elevational view thereof.

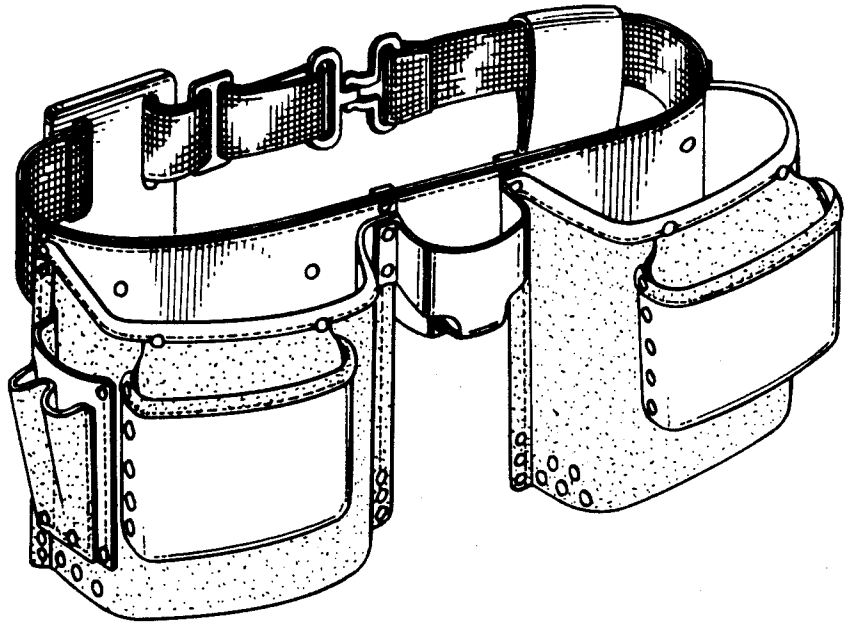

FIG. 1.

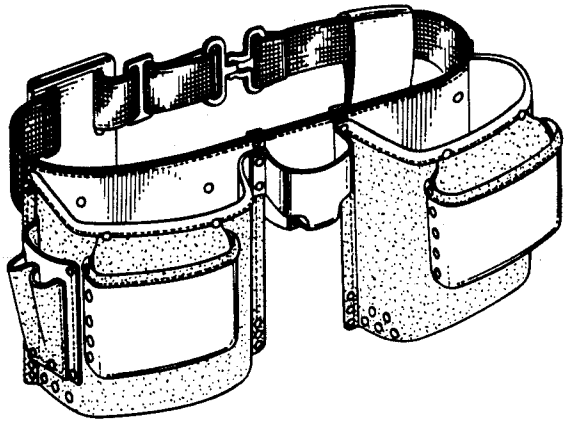

FIG. 2.

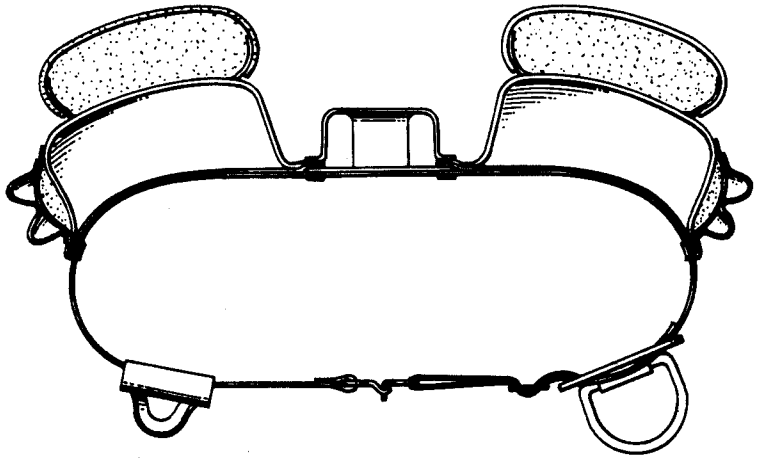

FIG. 3.

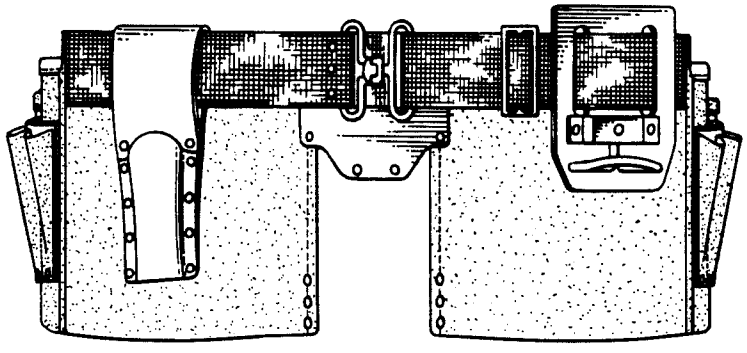

FIG. 4.

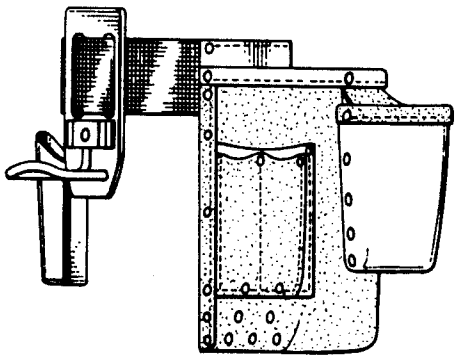

FIG. 5.

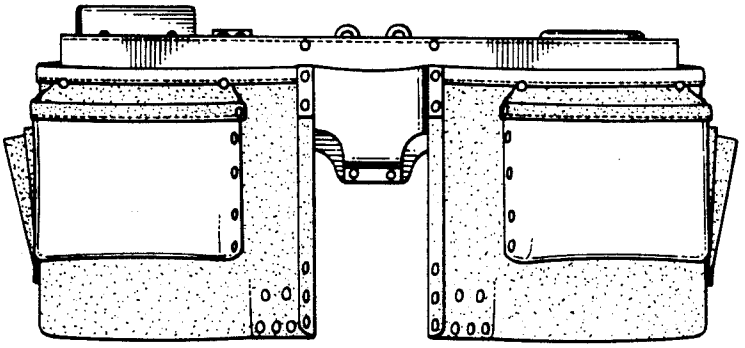

FIG. 6.

