(No Model.)

W. H. WRIGHT & E. O. SIMPSON.

HUB ATTACHING DEVICE.

No. 421,341. Patented Feb. 11, 1890.

FIG. 1.

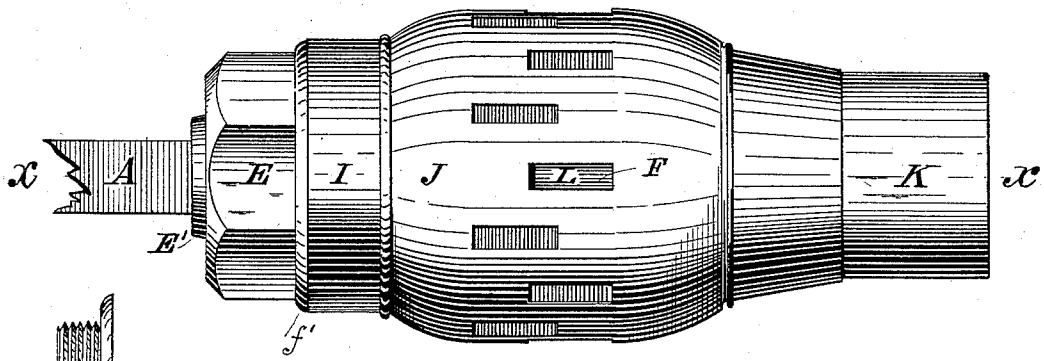

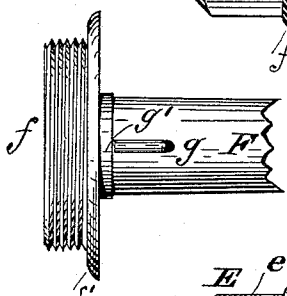

FIG. 5.

FIG. 2.

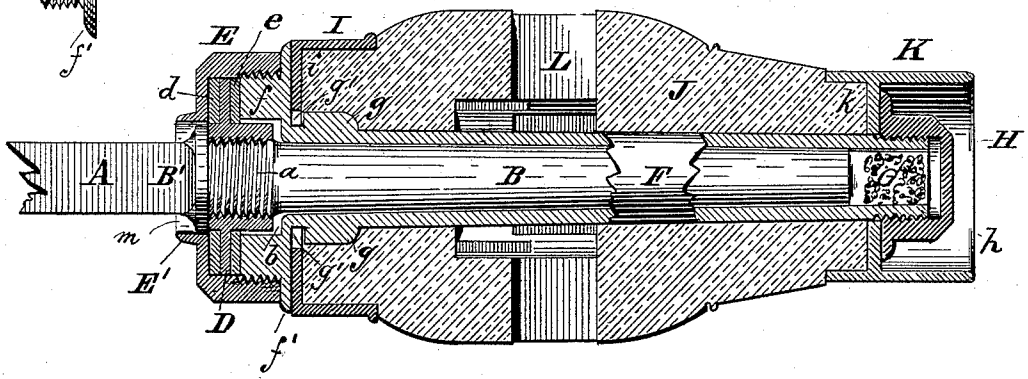

FIG. 3.

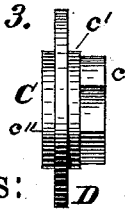

FIG. 4.

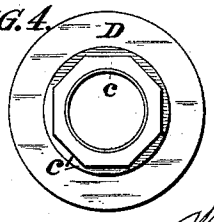

Witnesses:

Wm O Stark.

Centie S Stark

Inventors:

William H. Wright

Elisha O. Simpson,

by Michael J & Wm O Stark

Attorneys.

N. PETERS. Photo-Lithographer, Washington, D. C

UNITED STATES PATENT OFFICE.

WILLIAM H. WRIGHT AND ELISHA O. SIMPSON, OF BUFFALO, NEW YORK; SAID SIMPSON ASSIGNOR TO SAID WRIGHT.

HUB-ATTACHING DEVICE.

SPECIFICATION forming part of Letters Patent No. 421,341, dated February 11, 1890.

Application filed December 7, 1889. Serial No. 332,957. (No model.)

To all whom it may concern:

Be it known that we, WILLIAM H. WRIGHT and ELISHA O. SIMPSON, of Buffalo, in the county of Erie and State of New York, have jointly invented certain new and useful Improvements in Vehicle Axles and Hubs; and we do hereby declare that the following description of our said invention, taken in connection with the accompanying sheet of drawings, forms a full, clear, and exact specification, which will enable others skilled in the art to which it appertains to make and use the same.

Our present invention has reference to improvements in vehicle axles and hubs; and it consists, essentially, in the novel and peculiar combination of parts and details of construction, as hereinafter first fully set forth and described, and then pointed out in the claim.

In the drawings already referred to, which serve to illustrate our said invention more fully, Figure 1 is a plan of our improved vehicle axle and hub. Fig. 2 is a sectional plan of the same in line *x x* of Fig. 1. Fig. 3 is an end elevation of the removable collar. Fig. 4 is a side elevation of the same. Fig. 5 is a side elevation of a portion of the axle-box detached.

Like parts are designated by corresponding letters of reference in all the figures.

The object of this invention is the improvement of the means for removably fastening an axle-box with its hub (and wheel) to the axle-arm, whereby cheapness of production and the highest degree of efficiency is attained. To attain this result, we construct our vehicle-axle A, having the usual slightly-tapering arm B, provided with a fixed collar B′, and between it and the said arm B with a screw-threaded portion *a* to receive an internally-screw-threaded sleeve C. This sleeve has a laterally-projecting flange D, and around its central hole and on both of its faces annular projecting bosses *c′ c″*, the latter terminating in an octagonal portion *c*, serving as a means for applying a suitable wrench to screw said sleeve tightly upon said arm or to remove the same therefrom. This sleeve is placed with its annular projection *c″* against the fixed collar B′, and it serves to retain the box F in position upon the arm B by the means of a swivel-nut E, engaging an externally-screw-threaded enlargement *f* on the end of said box, said nut E having a central opening *m*, Fig. 2, surrounded by an annular rim E′, the latter acting as a sand-band to prevent grit and other objectionable matter from entering the box. The annular projection *f* has a flange *f′*, upon which the nut E bears, said flange in turn bearing upon the web *i* of a band I, engaging one end of the hub J, the web being notched at *g′* for the passage of the wings or lugs *g* on the box F to prevent the said box from turning in the hub. The forward end of the box F is externally screw-threaded at *h* to receive a cap-nut H, which, bearing upon the web *k* of a band K, fixed to the forward end of said hub J, draws the parts rigidly together. The depth of the swivel-nut is so arranged as to allow on both sides of the collar D leather washers *d e*, respectively, said washers being larger in diameter than they are now usually made, so as to render them serviceable for a long space of time.

It will now be observed that the distinguishing feature of this device from others heretofore patented to William H. Wright, one of the present applicants, is that the sleeve C has its octagonal wrench-section *c* within the recess *b* in the enlargement *f* of the box, so that it is entirely out of reach, except when the box is removed from the arm B. This is an essential change in construction, since heretofore, when the wheel has frequently been removed from the axle by removing the sleeve, the latter would soon fit too loosely on the threaded portion *a*, and would be liable to unscrew when the vehicle is backed up. This objection is therefore entirely overcome by placing the wrench-section into the recess in the enlargement of the box, as set forth. Another advantage in the construction of the axle and fastening as described is that the annular projection on the swivel-nut E protects the axle from grit, &c., while at the same time it covers any play that may occur in the nut and the fixed collar on the axle A.

Having thus fully described our invention, we claim as new and desire to secure to us by Letters Patent of the United States—

As an improved article of manufacture, a vehicle axle and hub fastening consisting, essentially, of an axle having a fixed collar B′, a screw-threaded portion *a* behind said collar, and an arm B, a sleeve-nut C, fitting said screw-threaded portion and being provided with annular projections on both of its faces, one of said projections terminating in an octagonal wrench-section, a swivel-nut E, having annular rim E′, an axle-box F, having on one end a recessed enlargement containing said wrench-section and a laterally-projecting flange, a band having a notched web, and a further band on the outer end of the hub, the whole being constructed and combined as and for the purpose set forth.

In testimony that we claim the foregoing as our invention we have hereto set our hands in the presence of two subscribing witnesses.

W. H. WRIGHT.
ELISHA O. SIMPSON.

Attest:
MICHAEL J. STARK,
WM. O. STARK.