United States Patent

Mori et al.

[15] **3,641,788**

[45] **Feb. 15, 1972**

[54] **AUTOMATIC PATTERN STITCH DEVICE IN A HAND KNITTING MACHINE**

[72] Inventors: **Miyoshi Mori; Shozo Takasu,** both of Kariya, Japan

[73] Assignee: **Aisin Seiki Kabushiki Kaisha,** Kariya, Japan

[22] Filed: **Aug. 26, 1969**

[21] Appl. No.: **853,005**

[30] **Foreign Application Priority Data**

Sept. 4, 1968 Japan.....43/63496

[52] **U.S. Cl.**.....**66/60,** 66/154

[51] **Int. Cl.**.....**D04b 7/00**

[58] **Field of Search**.....66/154–156, 60, 66/64, 125, 126, 128, 136, 137

[56] **References Cited**

UNITED STATES PATENTS

2,731,572	1/1956	Cobert	66/154 UX
3,035,426	5/1962	MacQueen	66/154 X
3,053,065	9/1962	Steiger	66/154
3,259,088	7/1966	Rockholt	112/79
3,247,687	4/1966	Schutzengel	66/128

Primary Examiner—Ronald Feldbaum

Attorney—Wenderoth, Lind & Ponack

[57] **ABSTRACT**

This invention relates to a pattern stitch hand knitting machine, wherein a pattern follower device cooperating with the knitting machine carriage is provided, whereby yarns of different kinds and of different color are selected according to the desired pattern on a pattern board through the operation of cursor contactors scanning the pattern of the pattern board, which pattern consists of electrically conductive material and insulating material.

8 Claims, 12 Drawing Figures

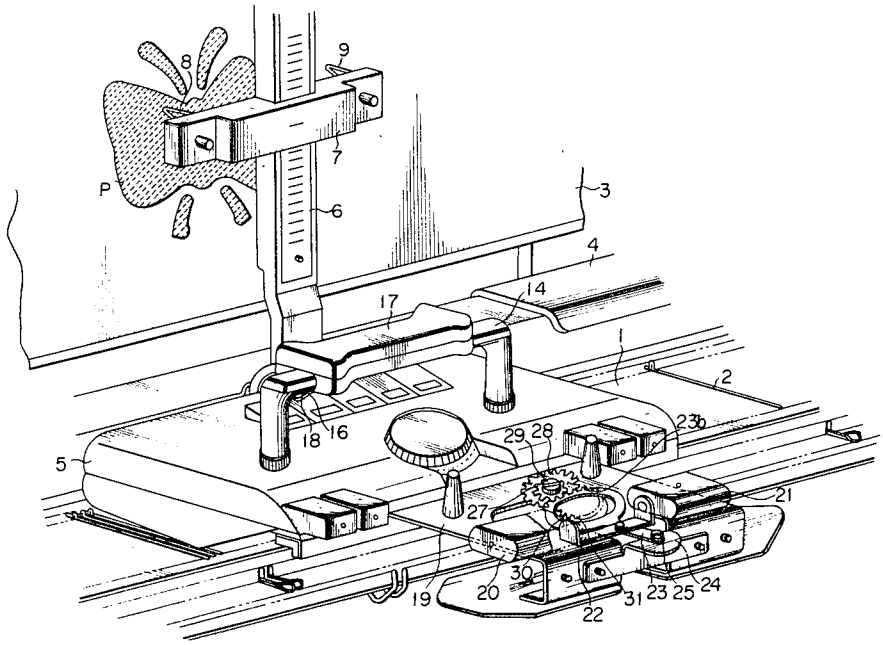

PATENTED FEB 15 1972

3,641,788

SHEET 1 OF 3

FIG. 2

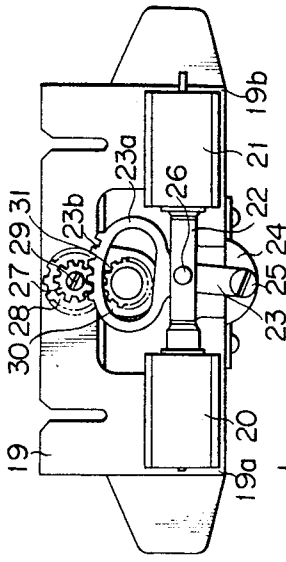

FIG. 1

FIG. 3

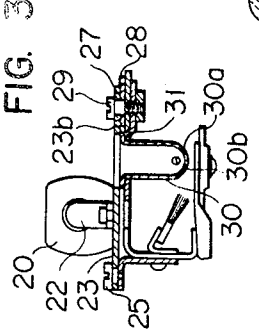

INVENTORs

MIYOSHI MORI and
SHOZO TAKASU

BY Wenderoth, Lind & Ponack

ATTORNEYs

FIG. 4

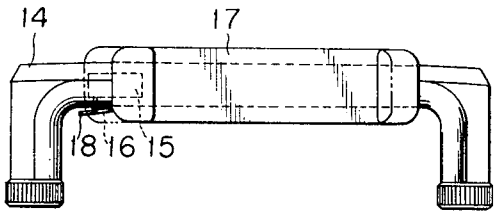

FIG. 5

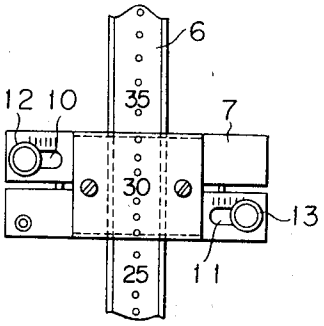

FIG. 6

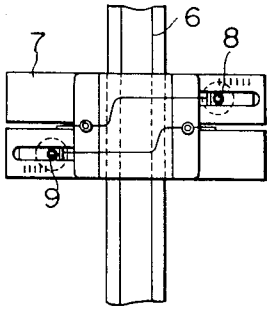

FIG. 7

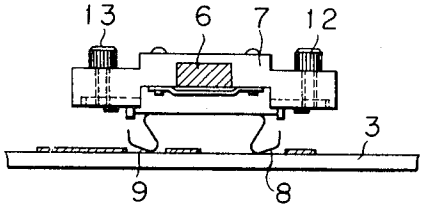

FIG. 8a

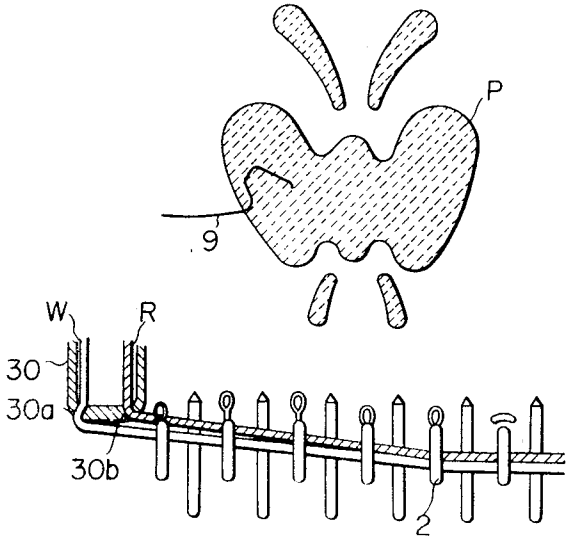

FIG. 8b

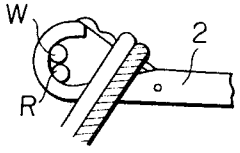

m MIYOSHI MORI and
SHOZO TAKASU,

INVENTOR S

BY Wenderoth, Lind & Ponack

ATTORNEYS

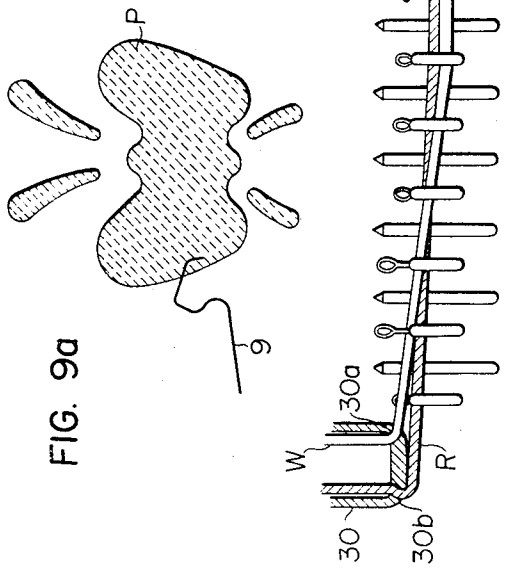

FIG. 9a

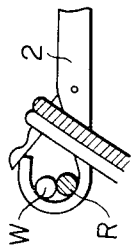

FIG. 9b

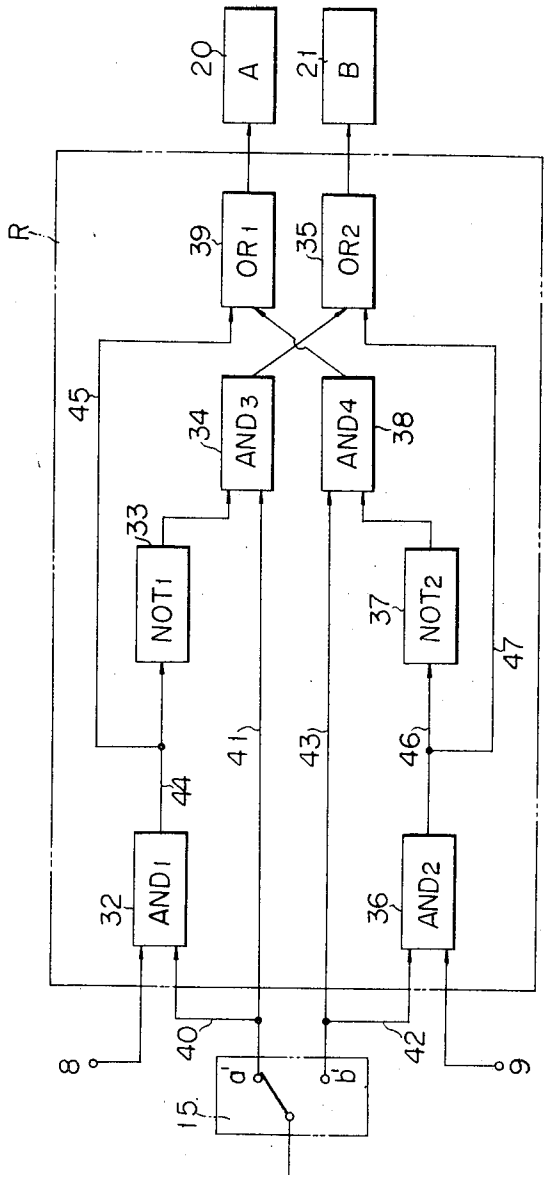

FIG. 10

MIYOSHI MORI and
SHOZO TAKASU,

INVENTORS

BY Wenderoth, Lind & Ponack

ATTORNEYS

AUTOMATIC PATTERN STITCH DEVICE IN A HAND KNITTING MACHINE

The principal object of this invention is to provide an improved controlling device for automatically selecting yarns of different kinds and different color according to a desired pattern on the pattern board.

A further object of the invention is to enable the user of a knitting machine to exchange the pattern stitch merely by changing the pattern board employed.

The above and other objects of the invention will become further apparent from the following detailed description, reference being made to the accompanying drawings showing a preferred embodiment of the invention.

In the drawings:

FIG. **1** is a perspective view of the essential portion of the hand knitting machine according to the present invention;

FIG. **2** is a detail showing a plan of the fabric presser;

FIG. **3** shows a central section of FIG. **2**;

FIG. **4** is a detail showing a carriage handle;

FIG. **5** is a front view of the pattern follower device (cursorial mechanism);

FIG. **6** shows a rear view of FIG. **5**;

FIG. **7** is a plan view of FIG. **5**;

FIGS. **8***a*, **8***b*, **9***a* and **9***b* are schematic views showing the pattern and cursor contactors, and the relation between the knitting needle, yarn and the yarn feeder; and

FIG. **10** is a logic circuit diagram.

Referring to the drawings, the reference numeral **1** designates a needle bed, and **2** is a knitting needle. **3** is a pattern board set upright at a suitable position on a machine standard **4**. The upright pattern board **3** consists of conductive material normally in connection with a source of electric power and bearing a pattern P composed of insulating material such as insulating paper. The insulating pattern P may if desired be composed of any insulating coating composition. **5** is a carriage and, at the rear portion thereof, there is a cursor device **6** forming a pattern follower device. Said cursorial device consists of a slidable cursor **7** which is provided at both ends with cursor contactors **8** and **9** adapted to slide vertically so that the cursor contactors **8** and **9** are adapted to scan either surface of the pattern board **3**, the conductive surface (nonpattern base surface) and insulating surface (pattern surface p), whereby electrically sensing the pattern. In FIG. **5**, **12** and **13** are adjusting buttons for adjusting the horizontal sliding movement of the cursor contactors **8** and **9**. **14** is a hollow carriage handle which is provided within the interior with a microswitch **15** having a button **16**. Said microswitch **15** switches the cursor contactors **8** and **9**, so that either one of the cursor contactors is rendered conductive, while the other is rendered nonconductive. In other words, the microswitch **15** normally connects either one of the cursor contactors **8** and **9** to a source of electric power. **17** is a slide handle slidably mounted on the gripping part of said handle **14**. According to sliding movement of said slide handle **17**, a leaf spring **18** (FIG. **4**) normally in contact with a button **16** will be pressed or released, so that said changeover button **16** will appear or disappear, whereby either one of said cursor contactors **8** and **9** is rendered conductive or nonconductive. **19** is a knit fabric presser, and the left and right presser elements **19***a* and **19***b* (FIG. **2**) are provided with changeover solenoids **20** and **21** (FIG. **2**) connected by a connector **22**. When received from either one of said cursor contactors **8** or **9** a signal which is produced by electrically sensing the conducting and insulating portions of the pattern board as previously described, either one of the solenoids will be energized, and vice versa. For instance, when the cursor contactor contacts with the conducting surface (non pattern surface) the left-hand solenoid **20** will be energized, but when the cursor contactor contacts with the insulating surface (pattern surface) the right-hand solenoid **21** will be energized and the other solenoid **20** will then be deenergized. Thus, the connector **22** will be attracted toward the energized solenoid. An actuator arm **23** is pivoted at a pin **25** on a bar **24** which is mounted on the fabric presser **19**. The arm **23** is pivoted to the connector **22** at its

mid point **26**. The extension of said arm **23** forms a ring **23***a* having teeth **23***b* on the outer periphery thereof. Said ring **23***a* is adapted to be turned around the pin **25** when said connector **22** is moved. **27** and **28** are two stepped gears pivoted to the fabric presser **19** as at **29**. The upper gear **27** is normally meshing with the gear teeth **23***b* of the arm **23**, and the lower gear **28** is normally meshing with yarn eye gear **31** which bears yarn feeder eyes **30***a* and **30***b* in a yarn feeder **30**. When the arm **23** is oscillated, the yarn feeder **30** will oscillate through angle of 180°, through said upper gear **27**, the lower gear **28** and the yarn eye gear **31**, whereby the position of the yarn eyes **30***a* and **30***b* will be exchanged.

Now, referring to FIG. **10**, a logic circuit R will be explained which is necessary to alternately actuate the solenoids **20** and **21** by means of the operation of both the cursor contactors **8** and **9** sensing the conducting and insulating surfaces and the switching operation of the microswitch **15**. A contact *a* for one cursor contactor **8** is connected in series with a circuit which consisted of an AND_1-circuit **32**, a NOT_1-circuit **33**, and AND_3-circuit **34**, an OR_2-circuit **35** and said solenoid **21** (solenoid B), while a contact *b* for the other contactor **9** is connected in series with a circuit which consists of an AND_2-circuit **36**, a NOT_2-circuit **37**, an AND_4-circuit **38**, an OR_1-circuit **39** and said solenoid **20** (solenoid A). Further, one contact *a'* for said microswitch **15** is connected to said AND_1-circuit **32** through a branch lead **40** and is also connected to the AND_3-circuit **34** through a lead **41**, while the other contact *b'* for said microswitch **15** is connected to the AND_2-circuit **36** through a branch lead **42** is also connected to the AND_4-circuit **38** through a lead **43**. A lead **44** connecting said AND_1-circuit **32** to said NOT_1-circuit **33** is connected to said OR_1-circuit **39** through a lead **45**. Similarly, a lead **46** connecting said AND_2-circuit **36** to said NOT_2-circuit **37** is connected to said OR_2-circuit **35** through a lead **47**. Now, when the carriage **5** is moved to the left, with the slide handle **17** moved to the position shown in chain line in FIG. **4**, one of the contacts *a'* for the microswitch **15** will be rendered conductive. When the carriage **5** is moved to the right, the other contact *b'* will be rendered conductive. The following description will be made on the assumption that the carriage **5** is moved to the left. When the contact of *a* of the cursor contactor **8** is contacting with the conducting surface (nonpattern surface) of the pattern board **3**, the logic circuit R will be operated as described hereinafter, thereby to energize the solenoid (A) **20**. More particularly, assuming that a conductive condition is a ONE and a nonconductive condition is a ZERO in the conditions as illustrated in FIG. **10**, a ONE output signal from the microswitch contact *a'* will be applied to one input of the AND_1-circuit **32** and a ONE signal from the cursor contact *a* will be applied to the other input of the same. Therefore, said AND_1-circuit **32** provides an ONE output signal. This ONE signal is applied to both of the OR_1-circuit **39** and the NOT_1-circuit **33** with it providing a ZERO output signal. This signal is applied to one input of the AND_3-circuit **34**. Said AND_3-circuit **34**, while having received at the other input the ONE signal from the microswitch contact *a'*, provides a ZERO output signal since the ZERO signal from said NOT_1-circuit is applied thereto as just described. The ZERO output signal from the output of the AND_3-circuit **34** is applied to the OR_2-circuit **35** as input signal thereto. On the other hand, considering input signals applied to the AND_2-circuit **36**, a ZERO signal will be applied to one input of the AND_2-circuit **36** since the other contact *b'* of the microswitch **15** is in the nonconductive condition. Accordingly, even if the other cursor contact *b* is contacting with either the conducting surface (non pattern surface) or the insulating surface (pattern surface) of the pattern board **3**, the AND_2-circuit **36** will provide a ZERO output signal since the signal from said contact *b'* is ZERO. Said ZERO signal from the output of the AND_2-circuit **36** is applied to both of the NOT_2-circuit **37** and the OR_2-circuit **35**. As a result, the NOT_2-circuit **37** provides a ONE signal which is applied to one input of the AND_4-circuit **38**. Since the ONE signal from the NOT_2-circuit **37** is now applied to said one

input of the AND $_4$-circuit **38** and the ZERO signal from the contact *b'* of the microswitch **15** has been applied to the other input of the AND_4-circuit **38**, it will provide a ZERO output signal and then this ZERO signal is applied to the OR_1-circuit **39**. With this ZERO signal and the ONE signal from the AND_1-circuit **32** the OR_1-circuit **39** results in providing a ONE output signal. The solenoid (A) **20** has the ONE signal received, thereby to be rendered conductive and to be energized. On the other hand, considering the solenoid (B) **21**, since the OR_2-circuit **35** receives the ZERO signals from both of the AND_3-circuit **34** and the AND_2-circuit **36**, the OR_2-circuit **35** provides a ZERO output signal. With this ZERO signal the solenoid (B) **21** remains nonconductive. Under the above-mentioned condition, as shown in FIGS. **9***a* and **9***b*, the white yarn W inserted through the feeder eye **30***a* of the feeder **30** and the red yarn R inserted through the feeder eye **30***b* are fed through the upper path and lower path, respectively. That is, the red yarn R is fed through the path lower than the path of the white yarn W, so that the top stitch will be composed of the red yarn R while the back stitch will be composed of the white yarn W. As said cursor contact *a* contacts with the insulating surface (pattern surface) of the pattern board **3** according to sliding movement of the carriage **5**, the signal from the cursor contact *a* will be transferred from the ONE to a ZERO so that two signals applied to the AND_1-circuit **32** are the ZERO and the ONE. Therefore, the AND_1-circuit **32** provides a ZERO output signal, which is applied to the OR_1-circuit **39**. Since the AND_4-circuit **38** continues to provide the ZERO signal, the OR_1-circuit **39** results in receiving two ZERO signals and providing a ZERO output signal, thereby to render the solenoid (A) **20** nonconductive. Considering input signals applied to the OR_2-circuit **35** at that time, after the ZERO output signal from the output of the AND_1-circuit **32** is inverted by the NOT_1-circuit **33** the inverted signal of ONE will be applied to said one input of the AND_3-circuit **34**. Since the ONE signal from the contact *a'* has been applied to the other input of the AND_3-circuit **34**, it provides a ONE output signal with it being applied to the OR_2-circuit **35**. As a result, said OR_2-circuit **35** provides a ONE output signal. The solenoid (B) **21** receives this ONE signal, thereby to be rendered conductive and to be energized. Consequently, the connector **22** is attracted toward said solenoid **21**, and the actuator arm **23** will be clockwisely turned around the pin **25**, whereby the yarn feeder **30** will be turned through **180**. Thus, the operation of the red yarn R passing through the feeder eye **30** will be reversed into the white yarn W, namely as shown in FIGS. **8***a* and **8***b*, the white yarn W will be transferred to pass through the feeder eye disposed lower than the feeder eye **20***b* for the red yarn R, so that the red yarn R will be fed through the upper path while the white yarn W will be fed through the lower path. Thus, the top stitch is composed of the white yarn W, while the back stitch is composed of the red yarn R.

During the sliding movement of the carriage **5**, by the sensing action of the cursor **7** for the pattern board **3**, the above-mentioned operation is repeated for regeneration the same pattern stitch on the fabric. From the foregoing it will be seen that, according to the present invention, when the cursor contactor contacts with the pattern P on the pattern board **3**, said pattern will normally appear on the top stitch, and that when the cursor contactor contacts with the nonpattern surface of the pattern board it makes the back stitch, thus automatically making the desired pattern stitch based on the pattern on the pattern board, such result being produced merely by manipulating the slidable carriage, whereby it is possible to attain higher knitting efficiency.

What we claim is:

1. A hand-operated knitting machine comprising a single flat needle bed; an immovable pattern board having a pattern thereon and mounted adjacent said needle bed, said pattern board comprising conductive material and connected to a source of electric power, and said pattern comprising insulating material; a carriage mounted for slidable movement longitudinally of said needle bed; a pattern follower device mounted on said carriage to traverse said pattern board and including contact means for contacting said pattern board to electrically distinguish between said pattern board and said pattern; a yarn feeder operatively associated with said carriage and including at least two yarn feeder eyes for feeding two different yarns; and means mounted on said carriage and connected to said yarn feeder for moving said yarn feeder in response to the signals of said contact means between a first position wherein one of said feeder eyes is above the other of said feeder eyes and a second position wherein the other of said feeder eyes is above said one feeder eye; whereby said pattern is reproduced in a knitted product.

2. A machine as claimed in claim **1**, wherein said contact means comprise cursor contactors for electrically sensing said conductive material and insulating material.

3. A machine as claimed in claim **2**, wherein said means for moving includes a pair of solenoids mounted on said carriage and said pattern follower device is electrically connected with said solenoids, said solenoids being energized or deenergized by said signals sensed by said cursor contactors of the conductive and insulating surface of the pattern board, and further comprising drawing means movable by said solenoids to actuate said yarn feeder.

4. A machine as claimed in claim **3**, wherein said yarn feeder is rotatable to move said feeder eyes between said positions.

5. A machine as claimed in claim **3**, herein said drawing means comprises a lever connecting said solenoids and a gear system connecting said lever to said yarn feeder for effecting rotational movement of said feeder.

6. A machine as claimed in claim **3**, further comprising a microswitch provided on said carriage, said microswitch selectively connecting either one of said cursor contactors with said electric power source according to sliding movement of said carriage.

7. A machine as claimed in claim **6**, wherein said microswitch is provided on a slide handle of said carriage.

8. A machine as claimed in claim **3**, wherein only the rearwardly of said cursor contactors, with respect to the direction of sliding movement of said carriage, can produce said signal.

* * * * *