PCT WORLD INTELLECTUAL PROPERTY ORGANIZATION
International Bureau

INTERNATIONAL APPLICATION PUBLISHED UNDER THE PATENT COOPERATION TREATY (PCT)

(51) International Patent Classification 7 : **A61L 9/20, C02F 1/32, H01J 65/04**	**A1**	**(11) International Publication Number:** **WO 00/32244** **(43) International Publication Date:** 8 June 2000 (08.06.00)

(21) International Application Number: PCT/EP99/09173

(22) International Filing Date: 23 November 1999 (23.11.99)

(30) Priority Data:

9826033.4	28 November 1998 (28.11.98)	GB
9917661.2	29 July 1999 (29.07.99)	GB

(71) Applicant *(for all designated States except US)*: QUAY TECHNOLOGIES LTD [GB/GB]; 7/8 Woodlands Farm, Cookham Dean, Berks SL6 9PN (GB).

(72) Inventors; and
(75) Inventors/Applicants *(for US only)*: LUCAS, James [GB/GB]; 12 Sunningdale Drive, Blundellsands, Liverpool L23 7XA (GB). MORUZZI, James, Lodovico [GB/GB]; 7/8 Woodlands Farm, Cookham Dean, Berkshire SL6 9PN (GB).

(74) Agent: PIKE, Christopher, Gerard; Pike & Co., Hayes Loft, 68A Hayes Place, Marlow, Buckinghamshire SL7 2BT (GB).

(81) Designated States: AE, AL, AM, AT, AU, AZ, BA, BB, BG, BR, BY, CA, CH, CN, CR, CU, CZ, DE, DK, DM, EE, ES, FI, GB, GD, GE, GH, GM, HR, HU, ID, IL, IN, IS, JP, KE, KG, KP, KR, KZ, LC, LK, LR, LS, LT, LU, LV, MA, MD, MG, MK, MN, MW, MX, NO, NZ, PL, PT, RO, RU, SD, SE, SG, SI, SK, SL, TJ, TM, TR, TT, TZ, UA, UG, US, UZ, VN, YU, ZA, ZW, ARIPO patent (GH, GM, KE, LS, MW, SD, SL, SZ, TZ, UG, ZW), Eurasian patent (AM, AZ, BY, KG, KZ, MD, RU, TJ, TM), European patent (AT, BE, CH, CY, DE, DK, ES, FI, FR, GB, GR, IE, IT, LU, MC, NL, PT, SE), OAPI patent (BF, BJ, CF, CG, CI, CM, GA, GN, GW, ML, MR, NE, SN, TD, TG).

Published
With international search report.
Before the expiration of the time limit for amending the claims and to be republished in the event of the receipt of amendments.

(54) Title: STERILISER

(57) Abstract

There is described a steriliser comprising an ultraviolet lamp, a microwave energy source for exciting said ultraviolet lamp and an enclosure for enclosing the ultraviolet lamp, the enclosure comprising a UV transparent waveguide. The steriliser is particularly suitable for use in the purification of water.

FOR THE PURPOSES OF INFORMATION ONLY

Codes used to identify States party to the PCT on the front pages of pamphlets publishing international applications under the PCT.

AL	Albania	**ES**	Spain	**LS**	Lesotho	**SI**	Slovenia
AM	Armenia	**FI**	Finland	**LT**	Lithuania	**SK**	Slovakia
AT	Austria	**FR**	France	**LU**	Luxembourg	**SN**	Senegal
AU	Australia	**GA**	Gabon	**LV**	Latvia	**SZ**	Swaziland
AZ	Azerbaijan	**GB**	United Kingdom	**MC**	Monaco	**TD**	Chad
BA	Bosnia and Herzegovina	**GE**	Georgia	**MD**	Republic of Moldova	**TG**	Togo
BB	Barbados	**GH**	Ghana	**MG**	Madagascar	**TJ**	Tajikistan
BE	Belgium	**GN**	Guinea	**MK**	The former Yugoslav Republic of Macedonia	**TM**	Turkmenistan
BF	Burkina Faso	**GR**	Greece			**TR**	Turkey
BG	Bulgaria	**HU**	Hungary	**ML**	Mali	**TT**	Trinidad and Tobago
BJ	Benin	**IE**	Ireland	**MN**	Mongolia	**UA**	Ukraine
BR	Brazil	**IL**	Israel	**MR**	Mauritania	**UG**	Uganda
BY	Belarus	**IS**	Iceland	**MW**	Malawi	**US**	United States of America
CA	Canada	**IT**	Italy	**MX**	Mexico	**UZ**	Uzbekistan
CF	Central African Republic	**JP**	Japan	**NE**	Niger	**VN**	Viet Nam
CG	Congo	**KE**	Kenya	**NL**	Netherlands	**YU**	Yugoslavia
CH	Switzerland	**KG**	Kyrgyzstan	**NO**	Norway	**ZW**	Zimbabwe
CI	Côte d'Ivoire	**KP**	Democratic People's Republic of Korea	**NZ**	New Zealand		
CM	Cameroon			**PL**	Poland		
CN	China	**KR**	Republic of Korea	**PT**	Portugal		
CU	Cuba	**KZ**	Kazakstan	**RO**	Romania		
CZ	Czech Republic	**LC**	Saint Lucia	**RU**	Russian Federation		
DE	Germany	**LI**	Liechtenstein	**SD**	Sudan		
DK	Denmark	**LK**	Sri Lanka	**SE**	Sweden		
EE	Estonia	**LR**	Liberia	**SG**	Singapore		

Steriliser

Technical Field

The present invention is in the field of sterilisation apparatus for sanitising or disinfecting a substance.

Background to the Invention

It is known to use ultraviolet (UV) radiation in sterilisation systems for use in the purification of water and the sanitisation of items. The UV radiation and any ozone produced by the UV radiation with oxygen in the air acts to kill bacteria and germs. It is also known to employ microwave energy to excite the source of UV radiation in such systems.

One problem with known systems is that it is difficult to safely provide sufficient excitation energy to the UV source and difficult to effectively transfer that energy to the substance to be sterilised. It is therefore difficult to arrange systems for high energy, high throughput sterilisation purposes.

There is now described a steriliser which enables efficient, high throughput sterilisation to be conducted. The steriliser comprises a UV lamp which is excited by a microwave energy source. The lamp is enclosed by a waveguide comprising UV transparent material.

WO96/40298 describes an electrodeless sterilisation apparatus comprising a UV lamp which is excited by a microwave energy source. The UV lamp is shaped to define a sterilisation passage therein. In use, the substance to be sterilised is passed through the sterilisation passage in the lamp. It may be appreciated that the size and geometry of the sterilisation passage will inevitably place limitations on the types of substances which may be sterilised using this apparatus and on the throughput achievable. It is also believed that direct contact of water with the lamp may affect the sterilisation capability of the lamp. Further, from a safety standpoint it is clearly undesirable that any breakage of the lamp may result in toxic vapour elements (e.g. mercury) contacting the substance to be sterilised.

US-A-5,166,528 describes a microwave excited ultraviolet steriliser for surface sterilisation of articles such as baby bottles and contact lenses. The steriliser comprises a plurality of UV bulbs which directly emit radiation to the articles.

US-A-5,141,636 describes a water purification system in which water is flowed along a flow path past a UV source. No mention is made of microwave excitation of the UV source.

WO97/35624 describes a steriliser employing a microwave-actuated UV energy source as the sterilisation means. No waveguide is provided between the UV energy source and the substance to be sterilised.

Summary of the Invention

According to one aspect of the present invention there is provided a steriliser comprising an ultraviolet lamp; a microwave energy source for exciting said ultraviolet lamp; and an enclosure for enclosing the ultraviolet lamp, the enclosure comprising a UV transparent waveguide.

By steriliser it is meant an apparatus suitable for use in any sterilisation, sanitisation, purification or disinfection processes.

By UV transparent waveguide it is meant a waveguide that is substantially transparent to ultraviolet radiation, typically having a transparency of greater than 90%, preferably greater than 95% to UV radiation.

Suitably, the ultraviolet lamp has no electrode. That is to say it is an electrode-less lamp such as one comprising a partially evacuated tube comprising an element or mixtures of elements in vapour form. Mercury is a preferred element for this purpose, but alternatives include mixtures of inert gases with mercury compounds, sodium and sulphur. Preferably, the dominant wavelength produced by the lamp is 254nm.

In one aspect, the waveguide controls the flow of microwave energy from the enclosure. Control of the microwave energy which passes through the waveguide is useful in embodiments of the invention which make of both UV and microwave radiation in the sterilisation process.

In another aspect, the waveguide blocks the flow of microwave energy from the enclosure.

Suitably, the enclosure comprises quartz or a UV-transparent plastic material.

Suitably, the waveguide comprises a conducting material. The conducting material may be integral, or applied as a coating or liner. The liner may directly contact the inner surface of the enclosure or be spaced therefrom.

Suitably, the waveguide comprises a conducting mesh. Preferably, the conducting mesh comprises a material selected from the group consisting of copper, aluminium and stainless steel.

Suitably, the ultraviolet lamp has an elongate form such as a cigar-shape.

Suitably, the transparent waveguide has a cylindrical or rectangular form.

Suitably, the ultraviolet lamp has an operating temperature of less than 70°C.

Suitably, the microwave energy source comprises a magnetron. Alternative sources are envisaged such as solid state devices.

Suitably, the steriliser additionally comprises a pathguide to guide the microwave energy from the microwave energy source to the ultraviolet lamp.

In one aspect the pathguide defines an essentially linear path for the microwave energy.

In another aspect, the pathguide defines a non-linear path such as a path defining at least one right angle.

Suitably, the steriliser additionally comprises a housing for said enclosure. Preferably, the housing has an inlet and an outlet and the housing is shaped to guide fluid flow from the inlet, past the enclosure to the outlet. Preferably, the fluid comprises water or air. Suitably, the steriliser additionally comprises a pump for pumping fluid from the inlet, past the enclosure to the outlet. Alternatively, gravity may be utilised to encourage fluid flow.

According to another aspect of the present invention there is provided a lamp arrangement for use in a steriliser comprising an ultraviolet lamp, said lamp being excitable by microwave energy; and an enclosure for enclosing the ultraviolet lamp, the enclosure comprising a UV transparent waveguide.

Preferably, the ultraviolet lamp has no electrode.

According to a further aspect of the present invention there is provided a method of sterilising a substance comprising applying microwave energy to an ultraviolet lamp to produce ultraviolet radiation; and exposing the substance to said ultraviolet radiation, wherein an enclosure encloses the ultraviolet lamp, the enclosure comprising a UV transparent waveguide.

In one aspect, the substance flows past the enclosure.

Brief description of the drawings

Preferred embodiments of the steriliser in accord with the present invention will now be described with reference to the accompanying drawings in which:

Figure 1. is a schematic representation of a first steriliser herein suitable for water purification purposes;

Figures 2a and 2b are schematic representations of second and third sterilisers herein suitable for use in water purification;

Figures 3a and 3b are schematic representations of fourth and fifth sterilisers herein suitable for use in air purification;

Figure 4. is a schematic representation of a sixth steriliser herein suitable for use in combined UV and microwave sterilisation methods.

Detailed description of the invention

The present invention is here described by means of examples, which constitute possible embodiments of the invention.

Figure 1. shows a steriliser comprising an ultraviolet lamp 10 enclosed by cylindrical enclosure 20. The cylindrical walls of the enclosure 20 form a waveguide and are comprised of quartz material which is transparent to UV radiation. A conducting copper mesh 30 is provided to the inner surface of the waveguide. First end of the cylindrical enclosure has blocking end flange 22 provided thereto. The second end is provided with coupling flange 24 which couples with right angled waveguide 40 which in turn connects with rectangular waveguide 50. Magnetron 60 acts as a microwave energy source to feed microwaves into the rectangular waveguide 50, thence into the right angled waveguide 40 and finally to the ultraviolet lamp 10 which is excited thereby.

The enclosure 20 is within tubular housing 70. The housing 70 has a water inlet 72 and a water outlet 74 provided thereto. In use, water flows from the inlet 72 past the enclosure 20 and towards the outlet 74. As the water flows past the enclosure 20 it is irradiated with UV radiation produced by the ultraviolet lamp 10. The radiation itself passes through the UV transparent walls of the enclosure 120a, 120b to contact the water.

Figures 2a and 2b show related santisers herein. Both comprise ultraviolet mercury discharge lamp 110a, 110b enclosed by cylindrical enclosure 120a, 120b. The cylindrical walls of the enclosure 120a, 120b form a waveguide and are comprised of quartz material which is transparent to UV radiation. A conducting copper mesh 130a, 130b is provided to the inner surface of the waveguide. The enclosure 120a, 120b has air or nitrogen circulating therein. First end of the cylindrical enclosure has blocking end flange 122a, 122b provided thereto. The second end is provided with coupling flange 124a, 124b which couples with water-tight chamber 150a, 150b which contains brass waveguide 140a, 140b and magnetron 160a, 160b. The magnetron 160a, 160b acts as a microwave energy source to feed microwaves into the brass waveguide 140a, 140b and thence to the ultraviolet lamp 110a, 110b which is excited thereby.

The enclosure 120a, 120b is within tubular housing 170a, 170b. The housing 170a, 170b has a water inlet 172a, 172b and a water outlet 174a, 174b provided thereto. In use, water flows from the inlet 172a, 172b past the enclosure 120a, 120b and towards the outlet 174a, 174b. As the water flows past the enclosure 120a, 120b it is irradiated with UV radiation produced by the ultraviolet lamp 110a, 110b. The radiation itself passes through the UV transparent walls of the enclosure 120a, 120b to contact the water.

Figures 3a and 3b show sanitisers similar in structure to the sanitisers of Figures 2a and 2b but for use in air purification. Both comprise ultraviolet mercury discharge lamp 210a, 210b enclosed by cylindrical enclosure 220a, 220b. The cylindrical walls of the enclosure 220a, 220b form a waveguide and are comprised of quartz material which is transparent to UV radiation. A conducting copper mesh 230a, 230b is provided to the inner surface of the waveguide. The enclosure 220a, 220b has air or nitrogen circulating therein. First end of the cylindrical enclosure has blocking end flange 222a, 222b provided thereto. The second end is provided with coupling flange 224a, 224b which couples with air-tight chamber 250a, 250b containing brass waveguide 240a, 240b and magnetron 260a, 260b. The magnetron 260a, 260b acts as a microwave energy source to feed microwaves into brass waveguide 240a, 240b and thence to the ultraviolet lamp 210a, 210b which is excited thereby.

The enclosure 220a, 220b is within tubular housing 270a, 270b. The housing 270a, 270b has an air inlet 272a, 272b and an air outlet 274a, 274b provided thereto. In use, air flows from the inlet 272a, 272b past the enclosure 220a, 220b and towards the outlet 274a, 274b. As the air flows past the enclosure 220a, 220b it is irradiated with UV radiation produced by the ultraviolet lamp 210a, 210b. The radiation itself passes through the UV transparent walls of the enclosure 220a, 220b to contact the air killing the bacteria and germs therein.

Figure 4 shows a cabinet steriliser herein suitable for use in sterilising objects such as medical instruments. Ultraviolet mercury discharge lamp 310 is enclosed by cylindrical enclosure 320. The cylindrical walls of the enclosure 320 form a waveguide and are comprised of quartz material which is transparent to UV radiation but only partially transparent to microwave radiation. A conducting copper mesh 330 is provided to the inner surface of the waveguide. The enclosure 320 optionally has air or nitrogen circulating therein. First end of the cylindrical enclosure has blocking end flange 322 provided thereto. The second end is provided with coupling flange 324 which couples with linear pathguide 340 which in turn connects with magnetron 360. The magnetron 360 acts as a microwave energy source to feed microwaves into pathguide 340 and thence to the ultraviolet lamp 310 which is excited thereby.

The enclosure 320 is within housing 370 which has an entry door 380 provided thereto. In use, items to be sterilised, which can include metal items, are placed in the housing 370. The items are irradiated with UV radiation produced by the ultraviolet lamp 310 and by microwave radiation deriving from the magnetron

360. The radiation itself, passes through the UV transparent and microwave partially transparent walls of the enclosure 320 to contact the items. Optionally, the housing 370 may be provided with UV transparent shelves for the items. An inner reflective lining, for example an aluminium foil lining, may also be provided to the housing 370.

The steriliser of the present invention is suitable for use in sterilising water for human consumption; sterilising waste water and sewage; sterilising metallic and non-metallic objects including medical instruments; sterilising air in buildings such as hospitals, offices and homes; curing glues and special inks; erasing eproms; and prolonging the shelf-life of foodstuffs by killing bacteria on the surface of the goods.

The steriliser of the present invention is suitable in one aspect for use in air-conditioning systems for use in vehicles such as cars, lorries and buses. The sanitiser will be sized and shaped to fit within the air-conditioning system of the vehicle and will typically therefore have a size less than the size it would possess when used in large scale air and water treatment applications.

The ultraviolet light produced by the sanitiser herein may additionally be channelled as a light source of high intensity. Suitable uses would include lighting within buildings and lighting for vehicles such as cars, lorries and buses.

Claims

1. A steriliser comprising

an ultraviolet lamp;

a microwave energy source for exciting said ultraviolet lamp; and

an enclosure for enclosing the ultraviolet lamp, the enclosure comprising a UV transparent waveguide.

2. A steriliser according to claim 1, wherein the ultraviolet lamp has no electrode.

3. A steriliser according to either of claims 1 or 2, wherein the waveguide controls the flow of microwave energy from the enclosure.

4. A steriliser according to either of claims 1 or 2, wherein the waveguide blocks the flow of microwave energy from the enclosure.

5. A steriliser according to any of claims 1 to 4, wherein the enclosure comprises quartz or a UV-transparent plastic material.

6. A steriliser according to any of claims 1 to 5, wherein the waveguide comprises a conducting material.

7. A steriliser according to claim 6, wherein the waveguide comprises a conducting mesh.

8. A steriliser according to claim 7, wherein the conducting mesh comprises a material selected from the group consisting of copper, aluminium and stainless steel.

9. A steriliser according to any of claims 1 to 8, wherein the ultraviolet lamp has an elongate form.

10. A steriliser according to any of claims 1 to 9, wherein the transparent waveguide has a cylindrical or rectangular form.

11. A steriliser according to any of claims 1 to 10, wherein the ultraviolet lamp has an operating temperature of less than 70°C.

12. A steriliser according to any of claims 1 to 11, wherein the microwave energy source comprises a magnetron.

13. A steriliser according to any of claims 1 to 12, additionally comprising a pathguide to guide the microwave energy from the microwave energy source to the ultraviolet lamp.

14. A steriliser according to claim 13, wherein the pathguide defines an essentially linear path.

15. A steriliser according to claim 13, wherein the pathguide defines a non-linear path.

16. A steriliser according to any of claims 1 to 15 additionally comprising a housing for said enclosure.

17. A steriliser according to claim 16, wherein the housing has an inlet and an outlet and the housing is shaped to guide fluid flow from the inlet, past the enclosure to the outlet.

18. A steriliser according to claim 17, wherein said fluid comprises water or air.

19. A steriliser according to either of claims 17 to 18, additionally comprising a pump for pumping fluid from the inlet, past the enclosure to the outlet.

20. A steriliser substantially as described in the accompanying description and drawings

21. A lamp arrangement for use in a steriliser comprising

an ultraviolet lamp, said lamp being excitable by microwave energy; and

an enclosure for enclosing the ultraviolet lamp, the enclosure comprising a UV transparent waveguide.

22. A lamp arrangement according to claim 21, wherein the ultraviolet lamp has no electrode.

23. A lamp arrangement substantially as described in the accompanying description and drawings

24. A method of sterilising a substance comprising

applying microwave energy to an ultraviolet lamp to produce ultraviolet radiation; and

exposing the substance to said ultraviolet radiation, wherein

an enclosure encloses the ultraviolet lamp, the enclosure comprising a UV transparent waveguide.

25. A method according to claim 24, wherein the substance flows past said enclosure.

26. A method of sterilising a substance substantially as described in the accompanying description and drawings.

FIG. 1.

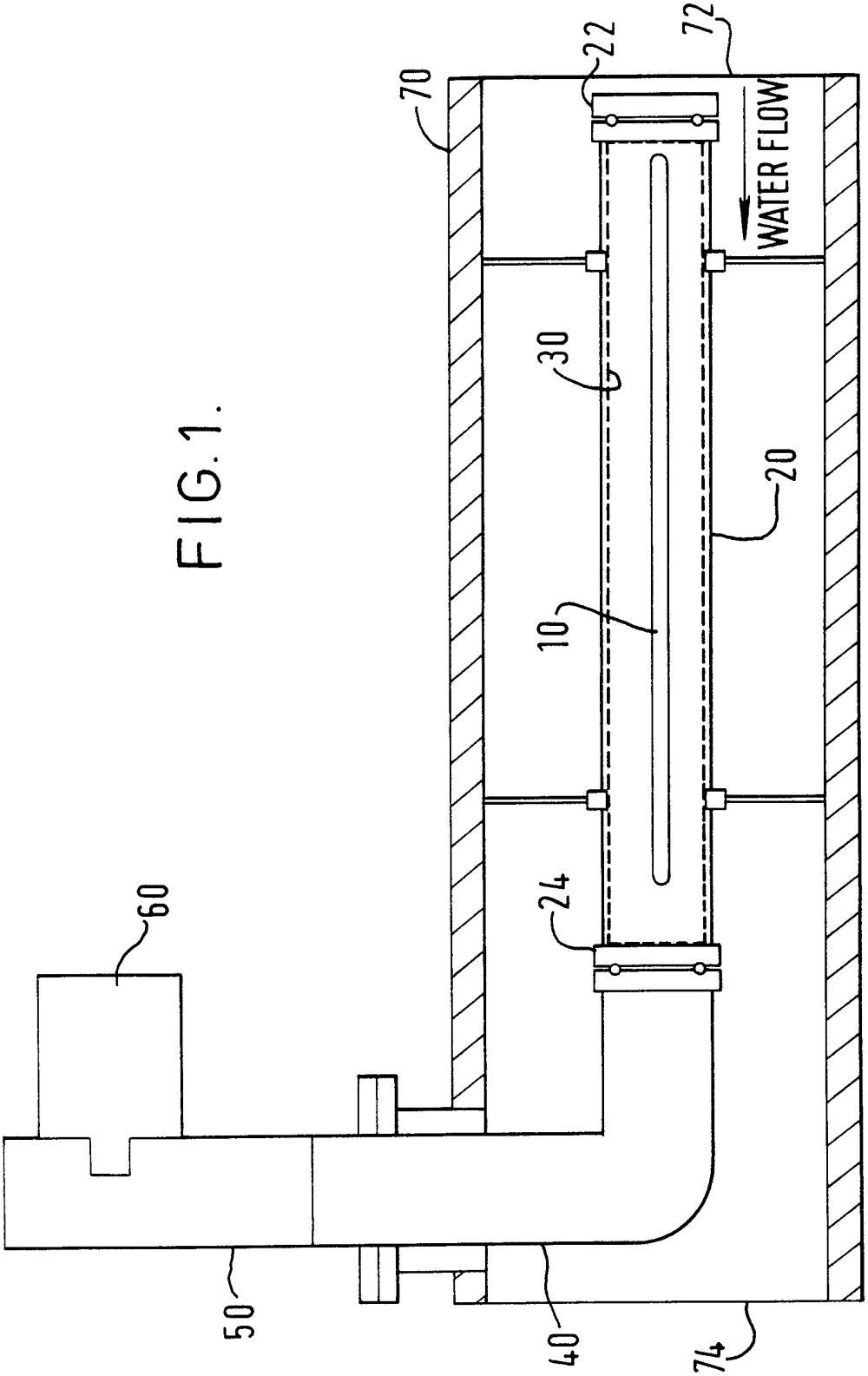

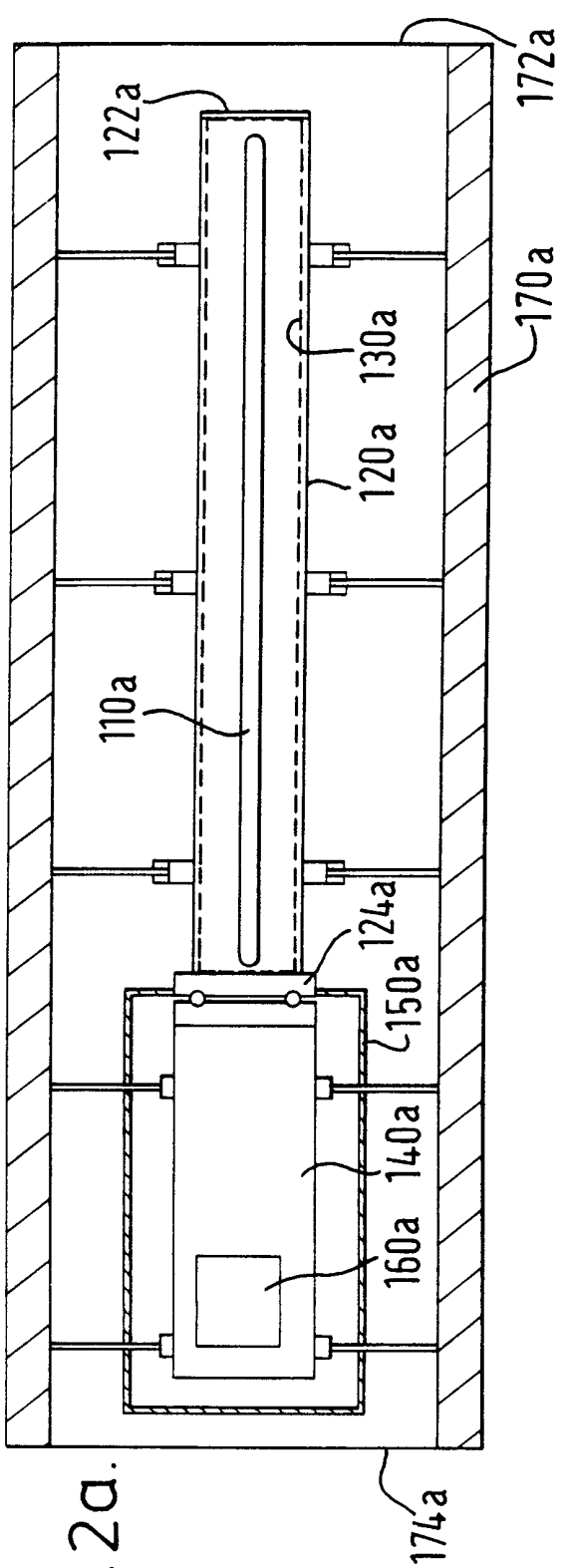
172a
122a
170a
130a
120a
110a
124a
150a
140a
160a
174a

FIG. 2a.

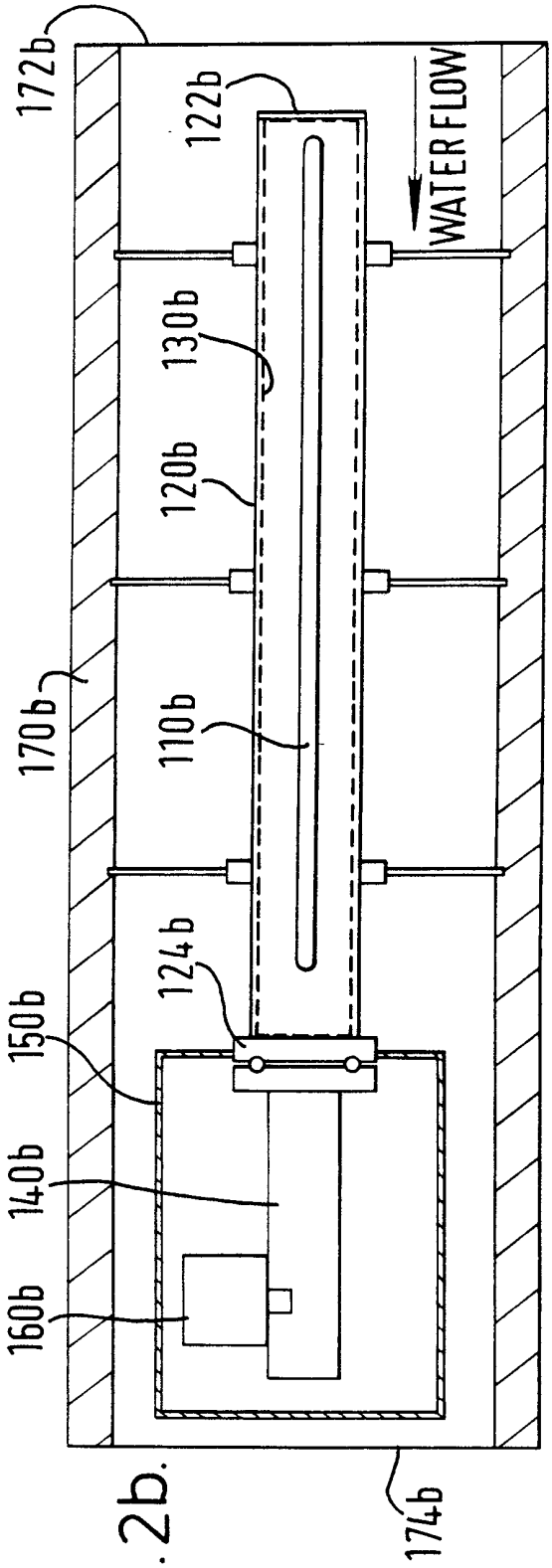
172b
122b
WATER FLOW
130b
120b
170b
110b
124b
150b
140b
160b
174b

FIG. 2b.

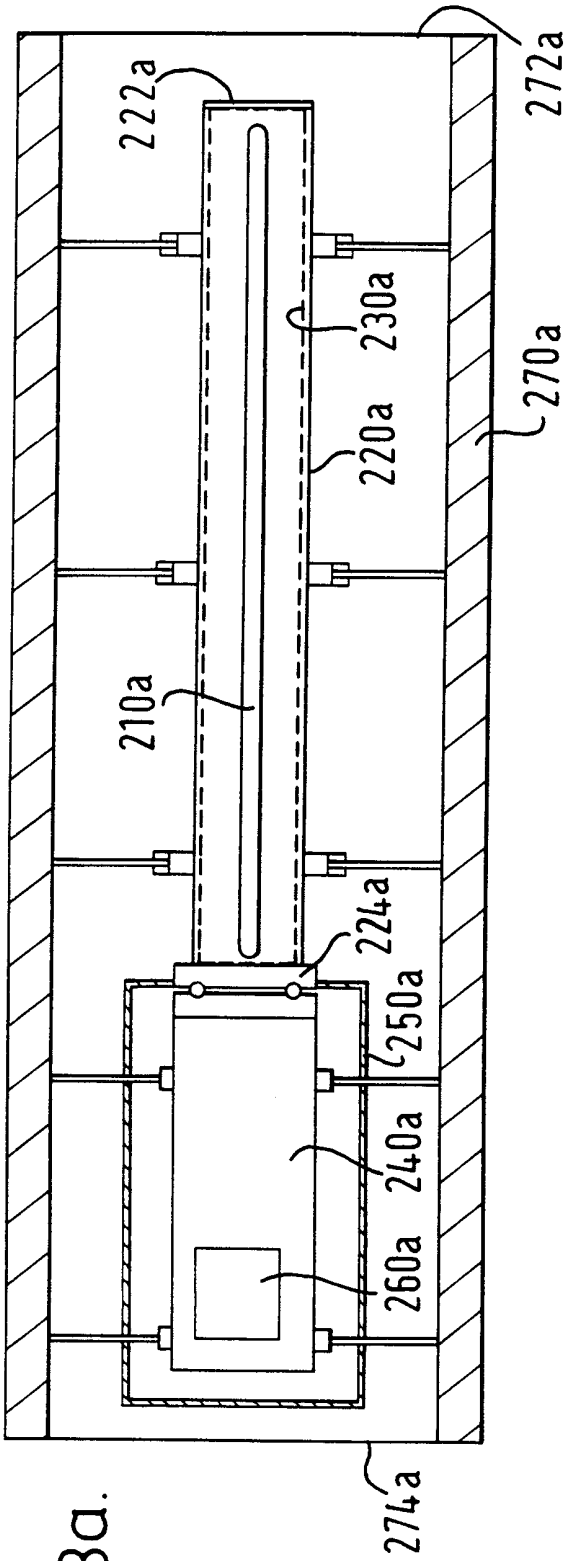
272a
222a
230a
220a
270a
210a
224a
250a
240a
260a
274a

FIG. 3a.

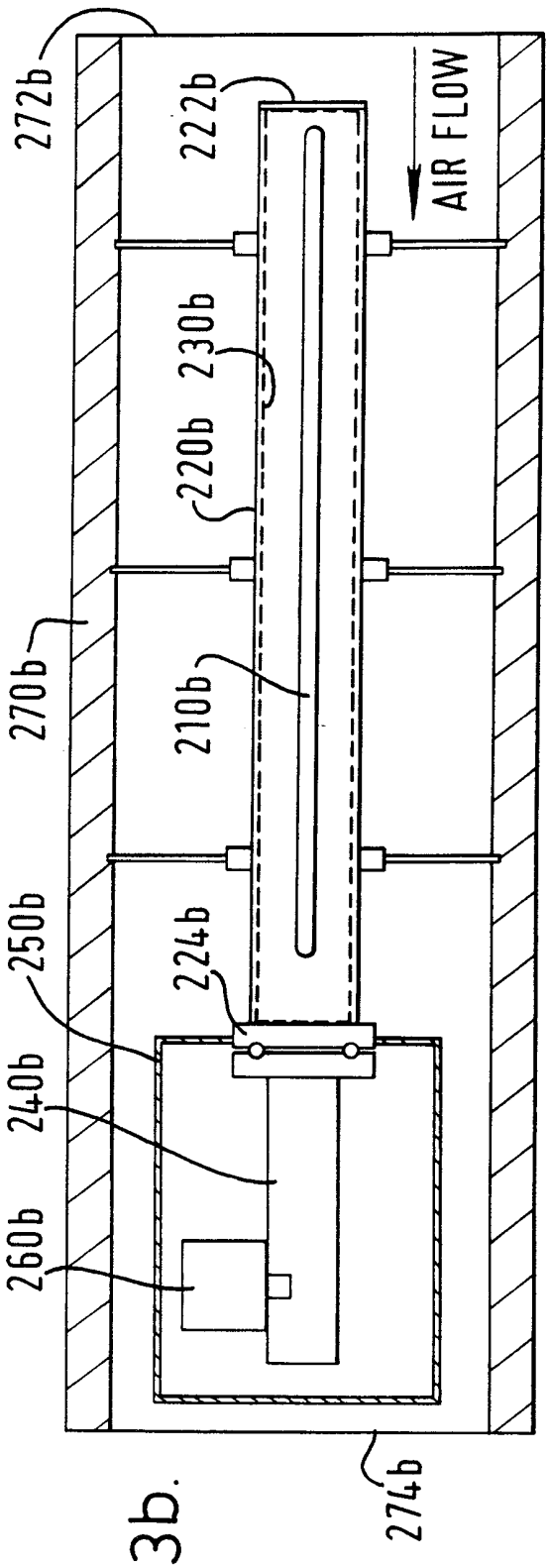
272b
222b
AIR FLOW
230b
220b
270b
210b
250b
224b
240b
260b
274b

FIG. 3b.

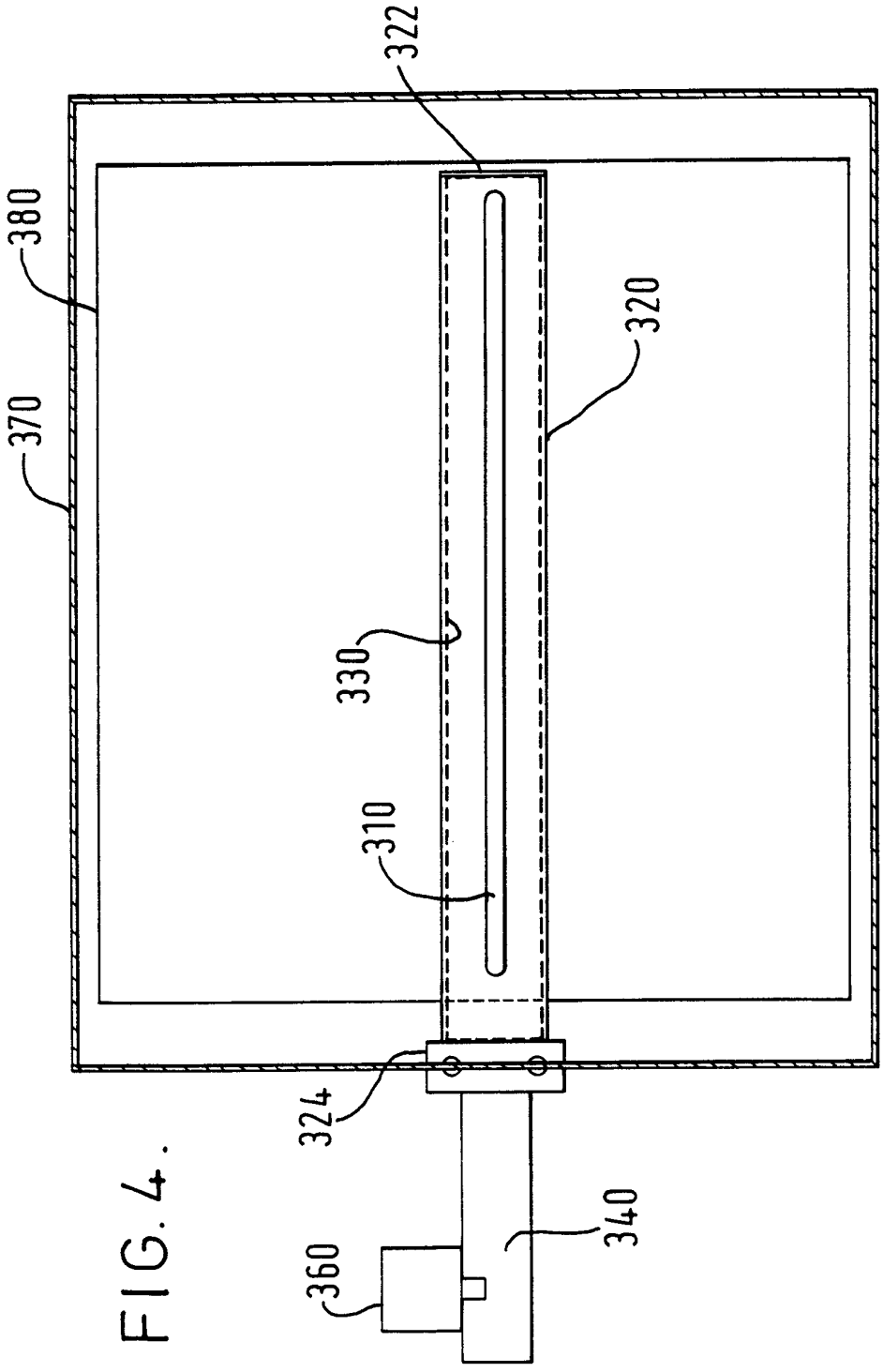

FIG. 4.

INTERNATIONAL SEARCH REPORT

Interna al Application No
PCT/EP 99/09173

A. CLASSIFICATION OF SUBJECT MATTER
IPC 7 A61L9/20 C02F1/32 H01J65/04

According to International Patent Classification (IPC) or to both national classification and IPC

B. FIELDS SEARCHED

Minimum documentation searched (classification system followed by classification symbols)
IPC 7 A61L B01J H01J C02F

Documentation searched other than minimum documentation to the extent that such documents are included in the fields searched

Electronic data base consulted during the international search (name of data base and, where practical, search terms used)

C. DOCUMENTS CONSIDERED TO BE RELEVANT

Category °	Citation of document, with indication, where appropriate, of the relevant passages	Relevant to claim No.
X	US 3 911 318 A (URV MICHAEL G ET AL) 7 October 1975 (1975-10-07) column 4, line 17 - line 32 column 8, line 29 - line 39 column 9, line 24 - line 43 column 10, line 7 - line 20 ---	1-19,21, 22,24,25
X	PATENT ABSTRACTS OF JAPAN vol. 010, no. 203 (C-360), 16 July 1986 (1986-07-16) & JP 61 046290 A (TOSHIBA CORP), 6 March 1986 (1986-03-06) abstract --- -/--	1-3,5,6, 9,12-18, 21,22, 24,25

[X] Further documents are listed in the continuation of box C.

[X] Patent family members are listed in annex.

° Special categories of cited documents :

"A" document defining the general state of the art which is not considered to be of particular relevance

"E" earlier document but published on or after the international filing date

"L" document which may throw doubts on priority claim(s) or which is cited to establish the publication date of another citation or other special reason (as specified)

"O" document referring to an oral disclosure, use, exhibition or other means

"P" document published prior to the international filing date but later than the priority date claimed

"T" later document published after the international filing date or priority date and not in conflict with the application but cited to understand the principle or theory underlying the invention

"X" document of particular relevance; the claimed invention cannot be considered novel or cannot be considered to involve an inventive step when the document is taken alone

"Y" document of particular relevance; the claimed invention cannot be considered to involve an inventive step when the document is combined with one or more other such documents, such combination being obvious to a person skilled in the art.

"&" document member of the same patent family

Date of the actual completion of the international search	Date of mailing of the international search report
27 April 2000	10/05/2000

Name and mailing address of the ISA	Authorized officer
European Patent Office, P.B. 5818 Patentlaan 2 NL – 2280 HV Rijswijk Tel. (+31–70) 340–2040, Tx. 31 651 epo nl, Fax: (+31–70) 340–3016	Muñoz, M

1

Form PCT/ISA/210 (second sheet) (July 1992)

INTERNATIONAL SEARCH REPORT

Interna al Application No
PCT/EP 99/09173

C.(Continuation) DOCUMENTS CONSIDERED TO BE RELEVANT

Category °	Citation of document, with indication,where appropriate, of the relevant passages	Relevant to claim No.
X	WO 96 09842 A (BODY SHOP INT PLC ;BAILEY WILLIAM (GB); LITTLE RICHARD (GB)) 4 April 1996 (1996-04-04) page 3, paragraph 2 - paragraph 3 page 6, paragraph 3 -----	1-3,5,6, 9,12-16, 21,22,24

1

Form PCT/ISA/210 (continuation of second sheet) (July 1992)

INTERNATIONAL SEARCH REPORT

International application No.
PCT/EP 99/09173

Box I Observations where certain claims were found unsearchable (Continuation of item 1 of first sheet)

This International Search Report has not been established in respect of certain claims under Article 17(2)(a) for the following reasons:

1. ☐ Claims Nos.:
because they relate to subject matter not required to be searched by this Authority, namely:

2. ☒ Claims Nos.: 20,23,26
because they relate to parts of the International Application that do not comply with the prescribed requirements to such an extent that no meaningful International Search can be carried out, specifically:
In view of the large number of compounds which are defined by the wording of the claims, the search has been performed on the general idea and compounds mentioned in the examples of the description.

3. ☐ Claims Nos.:
because they are dependent claims and are not drafted in accordance with the second and third sentences of Rule 6.4(a).

Box II Observations where unity of invention is lacking (Continuation of item 2 of first sheet)

This International Searching Authority found multiple inventions in this international application, as follows:

1. ☐ As all required additional search fees were timely paid by the applicant, this International Search Report covers all searchable claims.

2. ☐ As all searchable claims could be searched without effort justifying an additional fee, this Authority did not invite payment of any additional fee.

3. ☐ As only some of the required additional search fees were timely paid by the applicant, this International Search Report covers only those claims for which fees were paid, specifically claims Nos.:

4. ☐ No required additional search fees were timely paid by the applicant. Consequently, this International Search Report is restricted to the invention first mentioned in the claims; it is covered by claims Nos.:

Remark on Protest

☐ The additional search fees were accompanied by the applicant's protest.

☐ No protest accompanied the payment of additional search fees.

INTERNATIONAL SEARCH REPORT

International Application No. PCT/EP 99 /09173

FURTHER INFORMATION CONTINUED FROM PCT/ISA/ 210

Continuation of Box I.2

Claims Nos.: 20,23,26

In view of the wording of claims 20, 23, 26 presently on file, which render it difficult, if not impossible, to determine the matter for which protection is sought, the present application fails to comply with the requirements of Article 6 PCT (see also Rule 6.3(a) PCT and 6.2 (a)) to such an extent that a meaningful search is impossible.
Consequently search have been carried out on claims 1-19,21,22,24,25

The applicant's attention is drawn to the fact that claims, or parts of claims, relating to inventions in respect of which no international search report has been established need not be the subject of an international preliminary examination (Rule 66.1(e) PCT). The applicant is advised that the EPO policy when acting as an International Preliminary Examining Authority is normally not to carry out a preliminary examination on matter which has not been searched. This is the case irrespective of whether or not the claims are amended following receipt of the search report or during any Chapter II procedure.

INTERNATIONAL SEARCH REPORT

Information on patent family members

Interna al Application No
PCT/EP 99/09173

Patent document cited in search report	Publication date	Patent family member(s)	Publication date
US 3911318 A	07-10-1975	NONE	
JP 61046290 A	06-03-1986	NONE	
WO 9609842 A	04-04-1996	AT 177649 T	15-04-1999
		AU 700759 B	14-01-1999
		AU 3530195 A	19-04-1996
		CA 2200988 A	04-04-1996
		DE 69508413 D	22-04-1999
		EP 0783327 A	16-07-1997
		JP 10502563 T	10-03-1998
		NO 971456 A	20-05-1997
		US 6028315 A	22-02-2000