March 7, 1961 G. L. FULLER 2,973,666

JALOUSIE OPERATOR OR THE LIKE

Filed Aug. 28, 1958 2 Sheets-Sheet 1

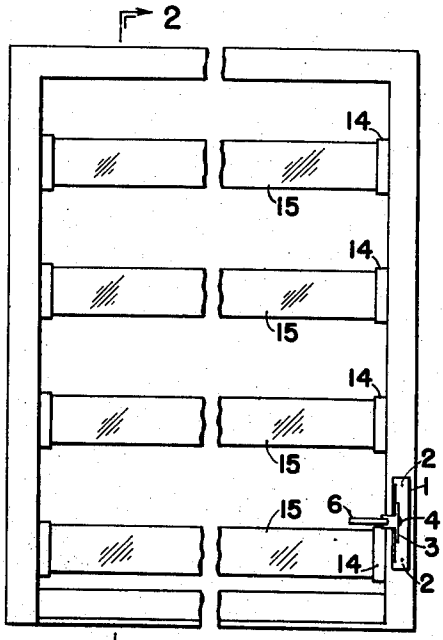

FIG. 1

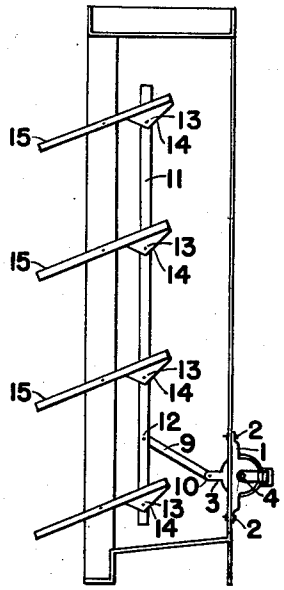

FIG. 2

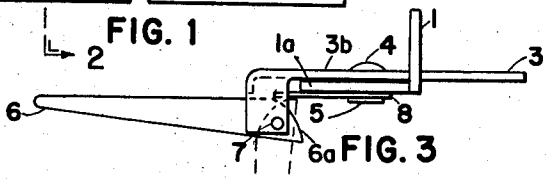

FIG. 3

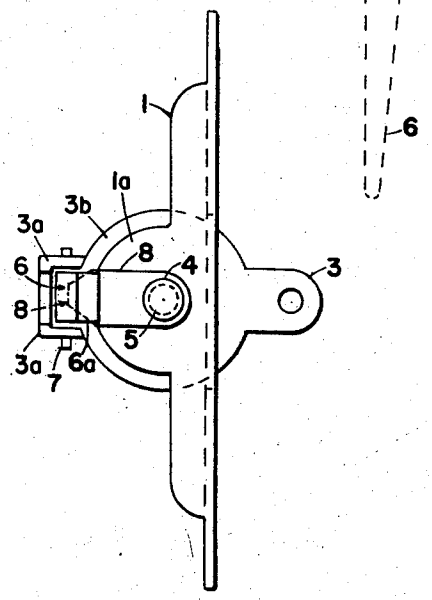

FIG. 5

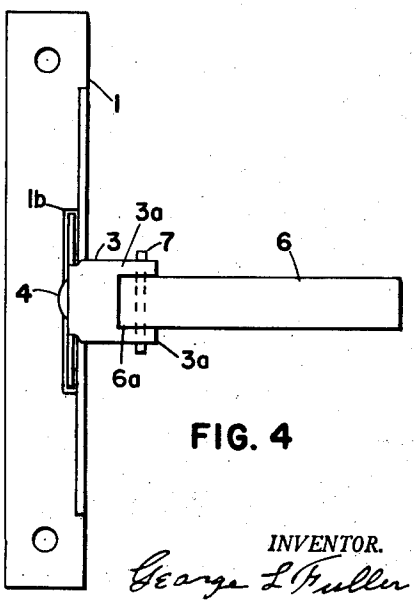

FIG. 4

INVENTOR.

George L Fuller

March 7, 1961 G. L. FULLER 2,973,666

JALOUSIE OPERATOR OR THE LIKE

Filed Aug. 28, 1958 2 Sheets-Sheet 2

FIG. 6

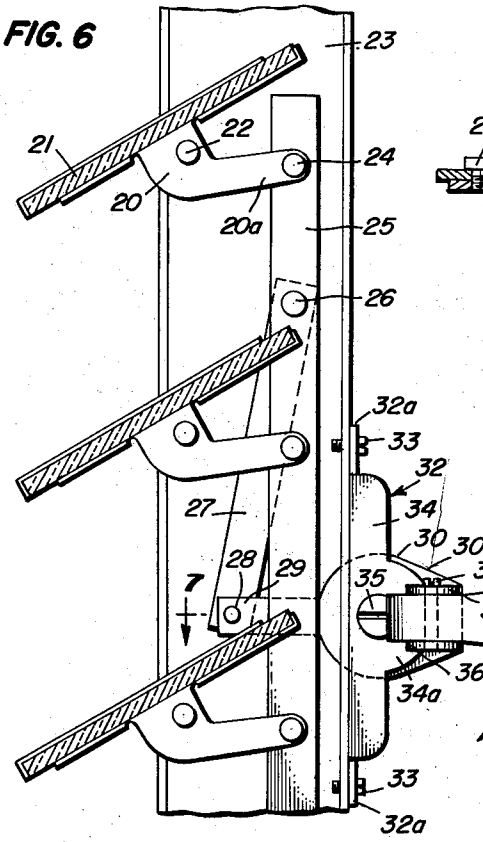

FIG. 7

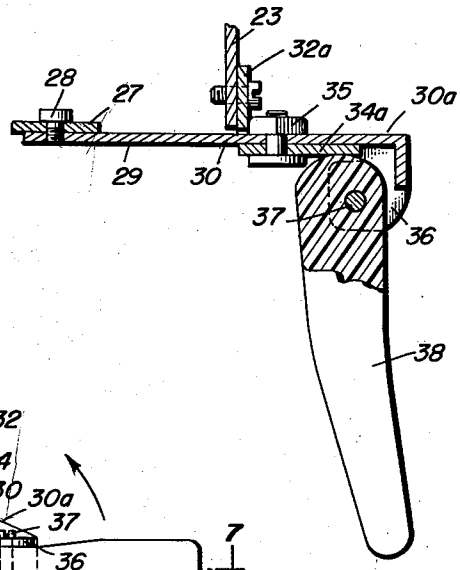

FIG. 8

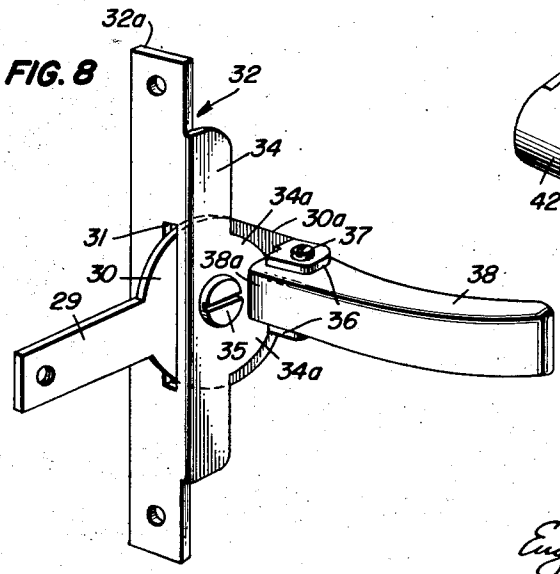

FIG. 9

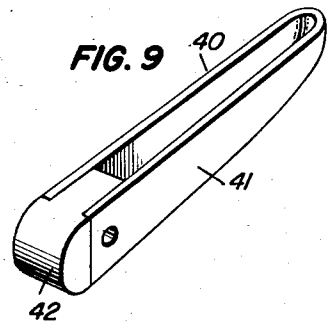

INVENTOR
George L. Fuller
Eugene E. Stevens
Eugene E. Stevens III
BY
ATTORNEYS

United States Patent Office 2,973,666 Patented Mar. 7, 1961

2,973,666

JALOUSIE OPERATOR OR THE LIKE

George L. Fuller, % Schwab Jalousie & Awning Co., Inc., 3855 N. Miami Ave., Miami, Fla.

Filed Aug. 28, 1958, Ser. No. 757,854

11 Claims. (Cl. 74—531)

My invention relates primarily to improvements in jalousie operators or the like although not limited thereto; and it is a continuation in part of my copending application Serial Number 573,241, filed March 22, 1956 and now abandoned.

Briefly and generally stated, the invention aims to provide a device as characterized which (1) eliminates the necessity for gearing; (2) is simple, durable and inexpensive in construction while being highly efficient in operation; and (3) which embodies positive means for effectively locking the louvers or the like in adjusted positions.

Various other objects and advantages of my advance in the art will be readily understood and appreciated by those versed in the art upon reference to the accompanying drawings which illustrate two presently preferred examples of the invention. It is to be understood, however, that the disclosures are to be taken as illustrative, rather than limitative, since my inventive concept is susceptible of other mechanical expressions within the spirit and scope of the subject matter claimed hereinafter.

In the drawings, wherein the same reference characters have been used to the designate the same parts wherever they appear throughout the several views—

Fig. 1 is an inside elevation of a typical jalousie window, showing a device embodying the invention mounted at a conventional location on the jamb;

Fig. 2 is a vertical section of a typical jalousie, as taken on line 2—2 of Fig. 1;

Fig. 3 is a top view of the operator showing, in broken lines, the position of the handle when its cam end is clamping to prevent linkage motion; and in full lines, the handle position when the clamping force of the cam end is removed and the handle is free to adjust the linkage to the next desired attitude;

Fig. 4 is a front view of the invention with the handle in clamping position;

Fig. 5 is a side view of the invention;

Fig. 6 is a view similar to Fig. 2 showing a modified form of the invention;

Fig. 7 is a sectional view taken on the line 7—7 of Fig. 6;

Fig. 8 is a perspective view of the operator of Figs. 6 and 7; and

Fig. 9 is a perspective view of the actuating and locking handle shown in Figs. 6, 7 and 8, but in modified form.

Referring to the drawings by reference characters and turning to Figs. 1–5, inclusive, it will be seen that louvers 15 are operated manually through lever member 3 which is pivotally connected by pin 4 and bushing 5 to the semi-circular extension 1*a* of the outstanding flange of an L-bracket 1. The base flange of L-bracket 1 is anchored to the jamb structure of the window opening by bolts 2, 2, and the lever 3 is fitted at one end with a pivotally connected operating handle 6.

The lever-opertaing handle 6 provides a cam 6*a* at its inner end and is pivoted inwardly thereof on the

bearing pin 7 between lever-carried bearing ears 3*a*. The arm extension of lever 3 has a pivotal connection as at 10 with the lower end of an upwardly extending link member 9 whose upper end is pivoted as at 12 to the usual louver control bar 11. Louver control bar 11 has the conventional pivot connections 13 with the end flanges 14 of louvers 15. Thus, when the lever 3 is swung about pivot 4, 5 by handle 6 in the full line position of the latter (Fig. 3), the louvers 15 are rocked in unison through the intervening linkage 9 and bar 11.

Fig. 2 shows the lever 3 as having a disk-form major portion 3*b* extending through the window jamb structure and (see Figs. 3 and 4) through a slot 1*b* in the base flange of bracket 1. As indicated in Figs. 3 and 5, the supporting ears 3*a* for handle pivot pin or bearing 7 are disposed adjacent the plane of the opposite side of bracket flange portion 1*a* from the disk-form major portion 3*b* of lever 3. The drawing also shows that the handle-supporting ears 3*a* are carried by an edge of the disk portion 3*b* of lever 3 which is remote from the arm extension which carries the link-connecting pivot 10.

The means for clamping the louvers 15 in a set position will now be described. In carrying out this phase of the invention, I provide a relatively stiff pressure plate 8 which is pivoted on the lever pivot 4, 5 at the opposite side of the bracket flange portion 1*a* from the major portion 3*b* of lever 3. The free end of pressure plate 8 extends between the lever-carried ears 3*a* so that it will be thereby swung with lever 3 and will always be in a position to be engaged by the cam end 6*a* of handle 6 when the latter is swung to the dotted line position of Fig. 3, which is the full line handle (6) position of Fig. 4. Engagement of cam 6*a* with pressure plate 8 locks the louvers 15 in a set position by so frictionally engaging pressure plate 8 with the bracket flange portion 1*a* as to lock the handle-carrying lever 3 against movement. The reason for the semi-circular outline of bracket flange portion 3*b* is so that there will always be a bracket flange portion adjacent handle cam 6*a* and the underlying outer portion of pressure plate 8 to be engaged by the latter. Pressure plate 8 constitutes a shiftable offset extension of bracket flange portion 1*a*. Thus, flange portion 1*a* need not be of such size as to marginally underlie cam 6*a*, and economy of metal is effected.

Referring to the second form of the invention illustrated in Figs. 6–9, inclusive, numeral 20 indicates end carriers for the glass louvers 21, which carriers are pivoted as at 22 to the window jamb structure 23 as indicated. The louver carriers 20 have rearwardly extending arms 20*a* which are pivoted as at 24 to a vertically shiftable control bar 25 corresponding to the control bar 11 of Fig. 2.

Actuation of the control bar 25 is effected by the link 27 which is pivoted to the control bar as indicated at 26 adjacent one end. The other end of link 27 is pivoted as at 28 to the lever extension 29 of the disk 30 which projects through the window jamb structure and through the slot 31 in the base flange 32*a* of the L-bracket 32 which is generally similar to the bracket 1 of Figs. 1–5, inclusive.

The bracket 32 is secured as at 33 to the jamb structure 23 and said L-bracket 32 has the outwardly extending flange 34 providing the marginally curved medial extension 34*a* to which the disk 30 is pivoted as indicated at 35. The lever-carrying disk 30 has, at is opposite edge from the lever 29, the extension 30*a* which extends rearwardly of the rear edge of the flange extension 34*a* of bracket flange 34. The disk extension 30*a* carries the spacedly opposed and laterally extending ears 36 which extend across the plane of flange extension 34*a* and pivotally support, as at 37, the inner end of the handle 38 at the opposite side of flange portion 34*a*

from disk 30. The handle 38 is preferably of plastic friction-like material and its cam-providing inner end 38*a* is adapted to swing as in Figs. 7 and 8 to lockingly engage the adjacent surface of flange portion 34*a*.

Thus, the handle 38 as shown, has a dual funtion in that it functions as a locking member and also as an operating handle for the disk 30, 29 as indicated in Fig. 6. It will be understood, as above indicated, that after the louvers have been appropriately adjusted by manipulation of the handle 38 in the Fig. 6 position, it is swung about its pivot 37 as indicated in Figs. 7 and 8, so that the cam action inner end 38*a* will bear against the adjacent face of the bracket flange portion 34*a* so as to lock the lever 29 and disk 30 against movement.

A modified form of the handle 38 is shown at 40 in Fig. 9 and provides cross-sectionally U-shaped major portion 41 into the outer end of which is fitted the friction block 42 which is held in place by a pivot pin such as 37 (Fig. 8) and can be renewed when necessary so as to avoid replacing the entire handle due to wear at the cam action end thereof.

Having thus described my invention, what I claim is:

1. An operator for jalousie louvers and the like comprising a support having a free outer edge, a louver-operating lever transversely pivoted to said support at one side thereof inwardly of said outer edge, one end of said lever having an offset extending across said outer support edge, a bearing carried by said lever offset at the other side of said support, a lever-operating handle pivotally carried by said bearing, said handle being movable to a lever operating position in which it is a substantial extension of the lever, the axes of said lever and handle pivots lying in tranversely intersecting planes, and means operated by said handle and engaging a portion of said support at its last mentioned side to lock the lever in different positions.

2. An operator for jalousie louvers and the like comprising a support having a free outer edge, a louver-operating lever transversely pivoted to said support at one side thereof inwardly of said outer edge, one end of said lever having an offset extending across said outer support edge, a bearing carried by said lever offset at the other side of said support, a lever-operating handle pivotally carried by said bearing, said handle being movable to a lever operation position in which it is a substantial extension of the lever, the axes of said lever and handle pivots lying in transversely intersecting planes, a cam surface at the inner end of said handle and operable to engage a portion of said support at its last mentioned side to lock the lever in different positions.

3. An operator for jalousie louvers and the like comprising a support having a free outer edge, a louver-operating lever transversely pivoted to said support at one side thereof inwardly of said outer edge for movement parallel with said support, one end of said lever having an offset extending across said outer support edge, a bearing carried by said lever offset at the other side of said support, a lever-operating handle pivotally carried by said bearing, said handle being movable to a lever operating position in which it is a substantial extension of the lever, the axes of said lever and handle pivots lying in transversely intersecting planes, and means operated by said handle and engaging a portion of said support at the last mentioned side to lock the lever in different positions.

4. An operator for jalousie louvers and the like comprising a support having a free outed edge, a louver-operating lever transversely pivoted to said support at one side thereof inwardly of said outer edge for movement parallel with said support, one end of said lever having an offset extending across said outer support edge, a bearing carried by said lever offset at the other side of said support and a lever-operating handle pivoted adjacent its inner end to said bearing, said handle being

movable to a lever-operating position in which it is a substantial extension of the lever, the axes of said lever and handle pivots lying in transversely intersecting planes, whereby the lever can be swung by said handle, said lever providing a short inner end extension for cammingly engaging said support when the handle is swung inwardly from lever-operating position so as to lock the louvers in predetermined positions.

5. The structure of claim 4, and the outer portion of said inner lever end extension being removable.

6. The structure of claim 4, and the outer portion of said inner lever end extension comprising a replaceable element, said lever having a receiving seat therefor, and the means pivoting the lever to said bearing comprising a removable pin extending through both said seat and element.

7. An operator of the shiftable frame-carried louvers of jalousie windows or the like, and comprising a support member for mounting on a jalousie frame, said support member having a substantially right angular and rearwardly extending flange and providing a slot adjacent said flange, an operating lever, pivot means mounting said operating lever on one side of said flange, said lever having one end extending through said slot for engagement with a louver control member, a pair of spaced lugs mounted on the other end of said operating lever extending at substantially a right angle to said operating lever to a position beyond the plane of the other side of said flange, a pressure plate mounted on said pivot means on said last mentioned side of said flange for rotational movement with said operating lever, an elongated operating handle having one end portion positioned between said lugs, a pivot pin substantially paralleling said flange and carried by said lugs, said pin pivotally supporting said elongated operating handle inwardly of its said end, said pivot-adjacent end of said operating handle having a cam surface whereby upon the pivotal movement of the operating handle in one direction, said cam surface frictionally engages said pressure plate to actuate it against said flange and lock said operating lever against pivotal movement.

8. The structure of claim 7, and said pressure plate having its outer end extending between said lugs so that it will rotate with the lever.

9. An operator for jalousie louvers and the like comprising a support having a free outer edge, a louver-operating lever pivoted to said support at one side thereof inwardly of said outer edge for movement parallel with said support, one end of said lever having an offset extending across said outer support edge, a bearing carried by said lever offset at the other side of said support, a lever-operating handle pivotally carried by said bearing, a cam formed adjacent the inner end of said handle, and a shiftable clamp plate carried by the second mentioned side of said support and movable with said lever, and said clamp plate having a portion underlying said cam in all positions of said lever, whereby the latter can be clamped to said support.

10. An operator for jalousie louvers and the like comprising a support having a free outer edge, a louver-operating lever pivoted to said support at one side thereof inwardly of said outer edge for movement parallel with said support, one end of said lever having an offset extending across said outer support edge, a bearing carried by said lever offset at the other side of said support, a lever-operating handle pivotally carried by said bearing, a cam formed adjacent the inner end of said handle, and a shiftable clamp plate carried by the second mentioned side of said support and movable with said lever, and said clamp plate having a portion underlying said cam in all positions of said lever, whereby the latter can be clamped to said support, and an operative connection between a portion of said lever offset and clamp plate whereby the latter is caused to swing with the lever so as to always underlie the handle-provided cam.

11. An operator for jalousie louvers and the like comprising a support having a free outer edge, a louver-operating lever pivoted to said support at one side thereof inwardly of said outer edge for movement parallel with said support, one end of said lever having an offset extending across the plane of said outer support edge, a bearing carried by said lever offset and spaced outwardly of the plane of the other side of said support, a lever-operating handle pivoted adjacent one end to said bearing for movement transversely of the plane of said support, and means including said handle and support and operated by the handle for wedgingly clamping the lever to the other side of said support.

References Cited in the file of this patent

UNITED STATES PATENTS

1,148,375	Gallup	July 27, 1915
1,924,557	Johnson	Aug. 29, 1933
2,661,012	Militano	Dec. 1, 1953
2,726,082	Ziesmer	Dec. 6, 1955
2,761,673	Cline	Sept. 4, 1956

FOREIGN PATENTS

3,959 of 1882	Great Britain	Aug. 18, 1882