(No Model.)

E. C. HISCOCK.

BRACKET CLOTHES BAR.

No. 360,386. Patented Mar. 29, 1887.

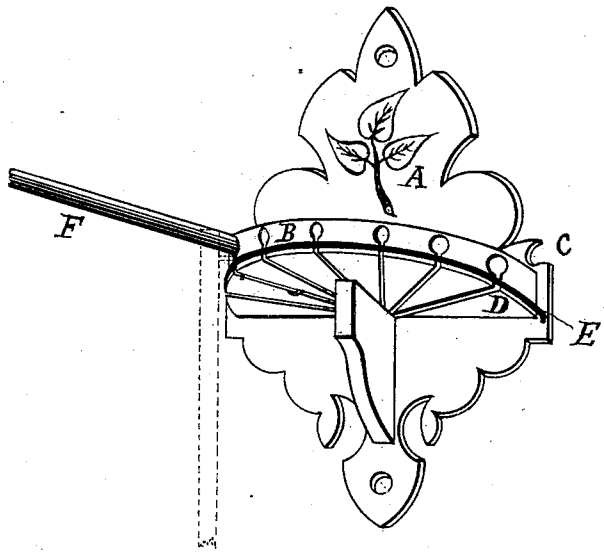

Fig. I.

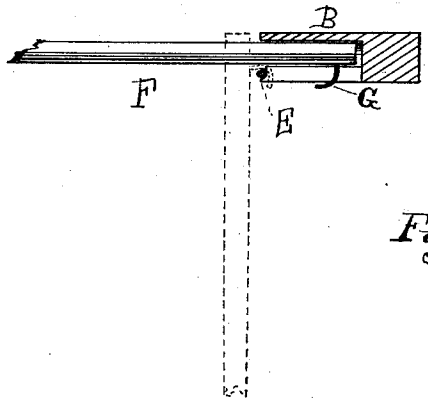

Fig. II.

Witnesses:

J. R. Gillespie.

Alb Reynick

Elum C. Hiscock.

Inventor:

By his Att'y, Robert A Dimmick Ag

N. PETERS, Photo-Lithographer, Washington, D. C.

UNITED STATES PATENT OFFICE.

ELUM C. HISCOCK, OF CARO, MICHIGAN.

BRACKET CLOTHES-BAR.

SPECIFICATION forming part of Letters Patent No. 360,386, dated March 29, 1887.

Application filed February 25, 1886. Serial No. 193,252. (No model.)

To all whom it may concern:

Be it known that I, ELUM C. HISCOCK, a citizen of the United States of America, residing at Caro, in the county of Tuscola and State of Michigan, have invented certain new and useful Improvements in Bracket Clothes-Bars, of which the following is a specification, reference being had therein to the accompanying drawings.

This invention relates to improvements in bracket-holders or racks for towels or similar articles, which are designed to be secured to a wall in a room, or in any convenient place where they are needed; and the object thereof is to produce a simple, economical, and convenient rack in its construction and operation and at the same time occupy but little space; and with these ends in view the invention consists in the novel construction and arrangement of parts, as will be hereinafter more particularly described and specifically claimed.

In the annexed drawings, to which reference is made, and which fully illustrate my invention, Figure I is a perspective view of my invention, and Fig. II is a sectional view of the same.

A represents the back or rear portion of a rack, which may be of any suitable form or design, and B is a semi-cylindrical support or shelf for a series of bars, which project therefrom at right angles to A, and upon which the articles are suspended for drying, &c. This support B is provided with a series of perforations, C, equally distant apart around its periphery or edge, and upon the under side of this support and communicating with said perforations C are a series of radial kerfs or slots, D, and around the periphery of the support B and at the lower part of these slots is a semicircular piece of wire, E, upon which rest the inner ends of a plurality of bars, F, the inner ends of said bars being provided with hooks G, through the medium of which, when the bars are not in use, they are hung or suspended and held against the wire E, as shown in dotted lines in Fig. II.

It will be observed from the above description that when the rack is to be used the inner ends of the bars are shoved to the farthest point against the back or rear of the rack, the bars moving within the slots, which allows said bars to remain supported by the wire and support and projecting horizontally and radially from the support, and when this position of the bar is assumed clothes or other articles can be placed thereon, when desired.

When it becomes necessary to not use the rack, the bars are all withdrawn through the perforations to the point where they abut against the semicircular piece of wire, when they fall down by gravity at right angles to the support or shelf, and the hooks upon the ends of said bars catching over the wire suspend them from the wire, as shown in Fig. II, hereinbefore referred to, whereby economy in room and space is secured, and where they will be out of the way and the bars not liable to be broken off by any obstacle running against them.

I wish it to be understood that I reserve the right to vary the construction of my device without any departure from the spirit of the invention.

Having thus described my invention, what I claim as new, and desire to secure by Letters Patent, is—

In a towel-rack, the combination of the bracket A and the shelf B, having the kerfs D, intersecting with perforations C in the periphery of the shelf B, and semicircular wire E, all constructed and arranged as shown and described.

In testimony whereof I affix my signature in presence of two witnesses.

ELUM C. HISCOCK.

Witnesses:

ALEX. REYNICK,

C. W. PARSONS.